Higher National Diploma in Quantity Surveying
2nd Year, 1st Semester Examination- 2020
QS 21013 – Measurement II

Instructions for Candidates:
Answer 05 questions only
All questions carry equal marks

No. of questions : 06
No. of pages : 08
Time : 03 hours

- Clean unmarked copy of standard Method of Measurement of Building Works (SLS 573) is permitted to use in the exam.
- You may use the below given equation when calculating reinforcement requirement Unit weight of steel (kg/m) = (Diameter of steel in mm)^2/162.162
- All assumptions (if any) should be stated in the query sheet
- All drawings are not to scale.

01.

i. Briefly explain the importance of BOQ. (04 Marks)

ii. Explain alteration in building with examples (06 Marks)

iii. Calculate following quantities for the given site based on the information provided in Figure 01.

a) Total cutting volume

b) Total filling volume

c) Quantity of earth material to be imported or disposed from the site (10 Marks)

(Total 20 Marks)

02.

Take-off quantities following based on the information provided in Drawing 02 (a) and (b).

i). Excavation work. (06 Marks)

ii). Screed concrete (05 Marks)

iii). Concrete and formwork for column base (04 Marks)

iv). Concrete and formwork for column up to Finish Floor Level (05 Marks)

(Total 20 Marks)

03.

Refer the Drawing 02 (a) and (b) and take-off quantities of following works.

i. Random rubble masonry (m^3) (05 Marks)
ii. Backfilling (05 Marks)
iii. Floor finishes with tile (05 Marks)
iv. External wall plastering (05 marks)

(Total 20 Marks)

04.

Refer the Drawing 03 (a) and (b) and take-off quantities for the following steel structures.

i). Column with fittings (07 Marks)
ii). Beams with fittings (07 Marks)
iii). Roof Trusses (02 Marks)
iv). Purlins (04 Marks)

(Total 20 Marks)

05.

Refer the Drawing 04 (a) and (b) and take-off quantities for following structures.

i). Concrete and formwork of columns above Finish Floor Level (04 Marks)
ii). Reinforcement work for columns up to finish floor level (06 Marks)
iii). Reinforcement work for columns above finish floor level (03 Marks)
iv). Reinforcement work for slab (02 Marks)
v). Prepare a bar bending schedule for columns and slab. (05 Marks)

(Total 20 Marks)

06.

Refer the Figure Drawing 05 and take-off quantities for the following works.

i. Concrete for staircase landings and flight (05 Marks)
ii. Formwork for staircase landings and flight (05 Marks)
iii. Prepare a bar bending schedule for staircase excluding tie beams (10 Marks)

(Total 20 Marks)

Figure 01

The following data is shown at each intersection point (station) on the grid:

Elevation o Drawing 02 (a) xisting Grade

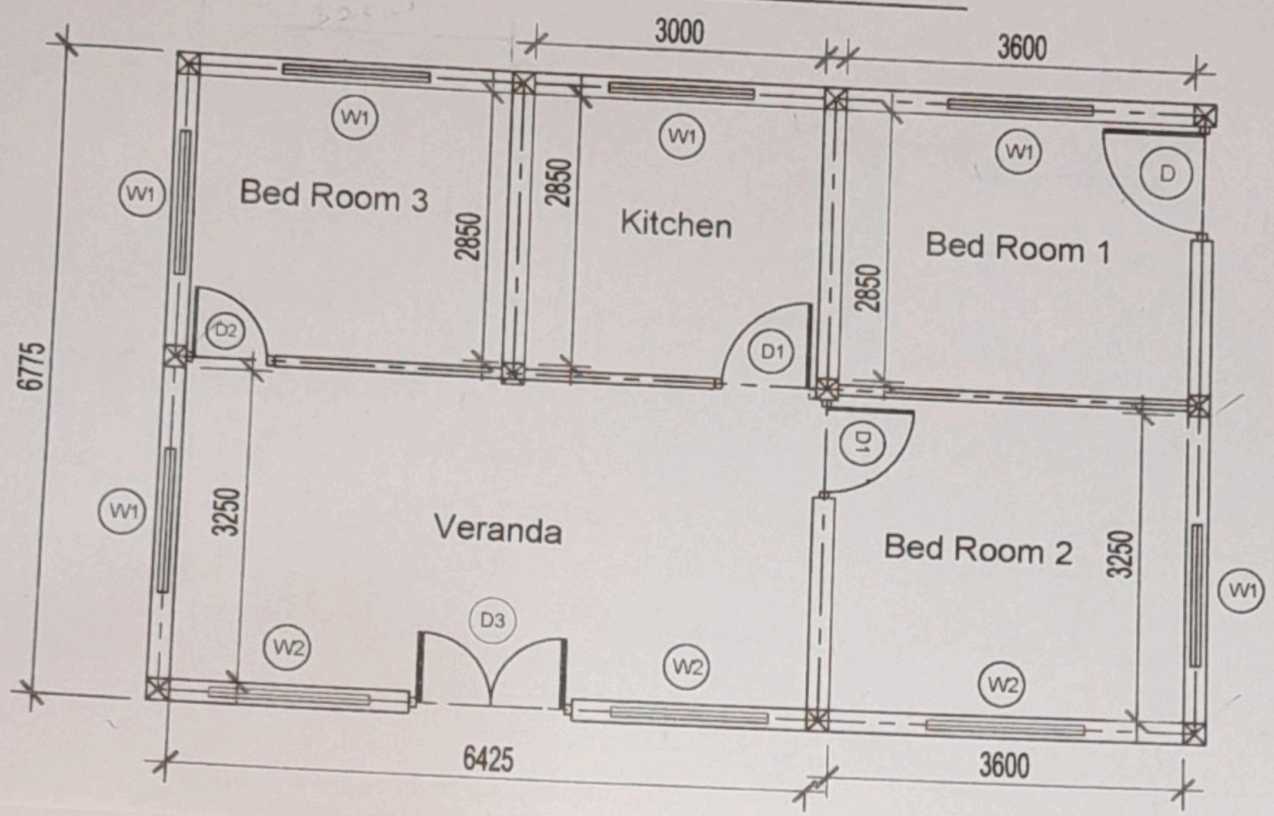

L = 975 + 275 + 225 + 20
= 1495
= 1.495
1.50

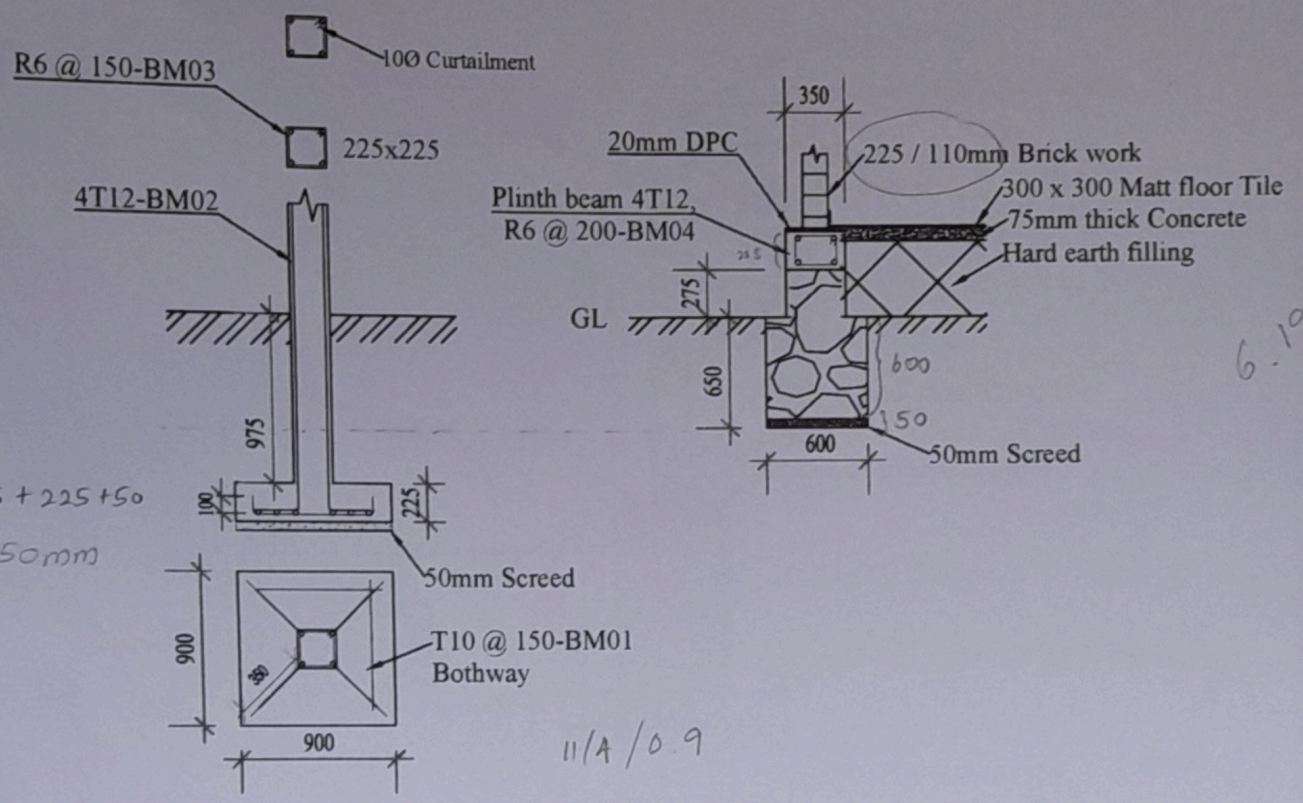

L = 975 + 225 + 50
= 1250mm

6.19

11/A / 0.9

GENERAL NOTES:

01. All dimensions are given in millimeter.
02. All drawings are not to be scaled.
03. Concrete mix as follows.

Foundation Mass Concrete	- 1:2:4
Floor Concrete	- 1:2.5:5
Column, Beams, lintels	- 1:2:4

04. Wall height is 3m (No gable wall)
05. Plinth beam height 225mm
06. Clear covers as follows:

Column base	- 40mm
Column shaft, beams, lintels	- 25mm

Drawing 02 (b)

SCHEDULE OF DOORS & WINDOWS

TYPE	SIZE	DESCRIPTIONS	NoS.
D	1200 x 2400	Paneled Door with 100 x 75 Frame	01
D1	1050 x 2100	-Ditto-	02
D2	885 x 2100	-Ditto-	01
D3	1650 x 2400	-Ditto-	01
W1	1500 x 1650	Glazed window with 100 x 75 Frame	06
W2	1600 x 1800	-Ditto-	03

Drawing 03 (a)

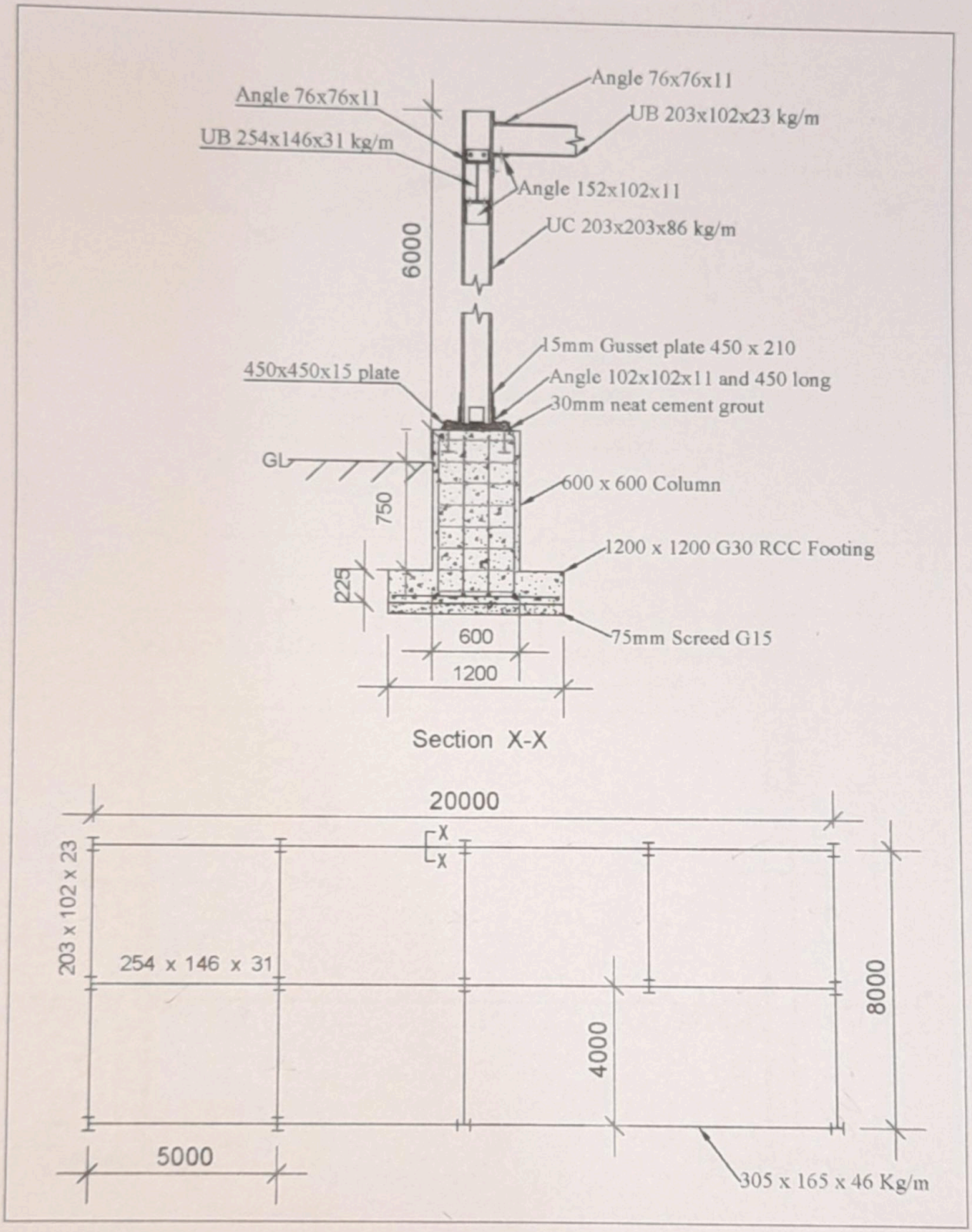
Angle 76x76x11
Angle 76x76x11
UB 203x102x23 kg/m
UB 254x146x31 kg/m
Angle 152x102x11
UC 203x203x86 kg/m
6000
15mm Gusset plate 450 x 210
450x450x15 plate
Angle 102x102x11 and 450 long
30mm neat cement grout
GL
600 x 600 Column
750
1200 x 1200 G30 RCC Footing
225
75mm Screed G15
600
1200
Section X-X
20000
X
X
203 x 102 x 23
254 x 146 x 31
8000
4000
5000
305 x 165 x 46 Kg/m

Drawing 03 (b)

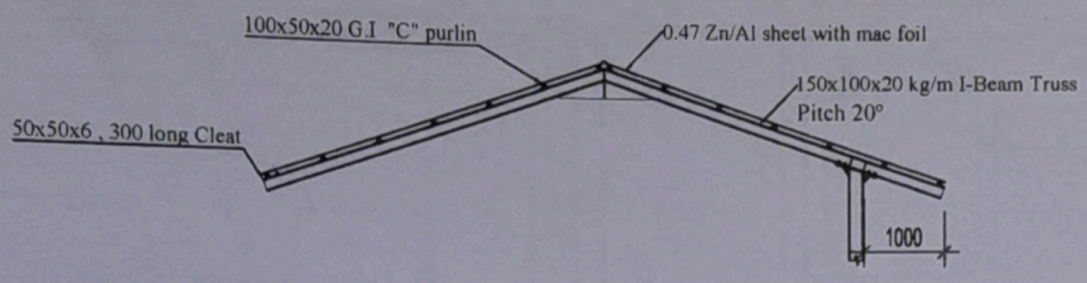

GENERAL NOTES:

01. All dimensions are given in millimeter.
02. Trusses fixed on all columns (5 Nos)
03. Roof overhang length is 1000 in all sides
04. Purlin interval 900 c/c
05. Roof pitch is 20°

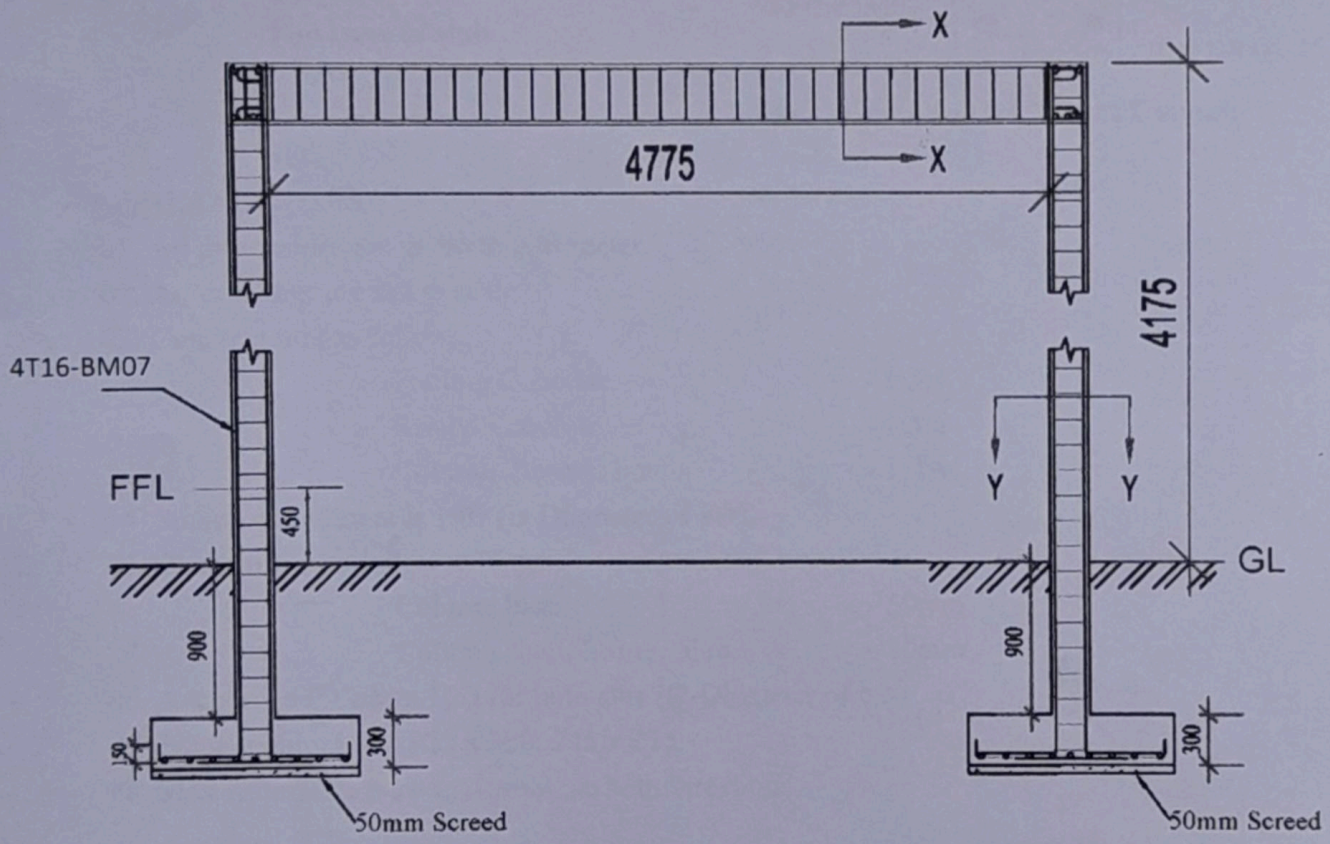

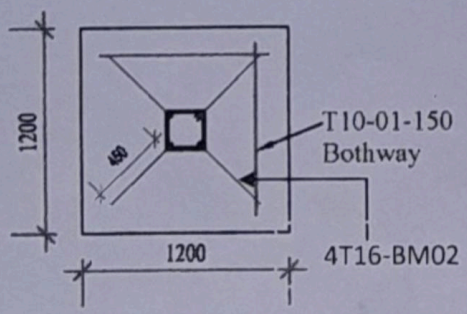

Drawing 04 (a)

Drawing 04 (b)

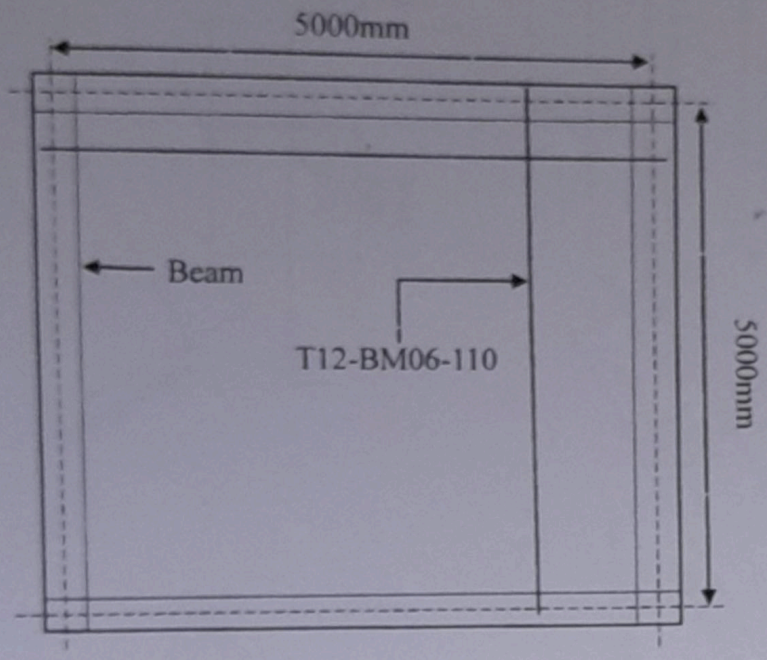

Top view of slab

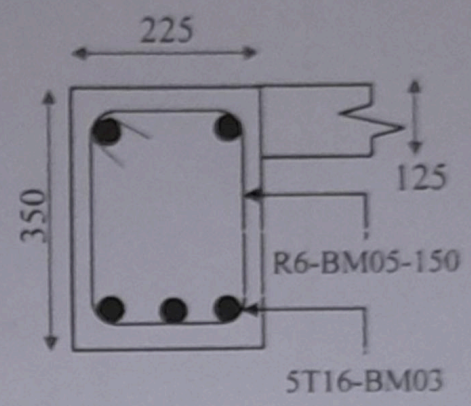

Cross section X-X of beam

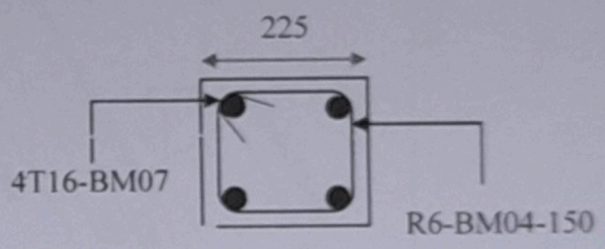

Cross section Y-Y of Column

GENERAL NOTES:

01. All dimensions are given in millimeter.
02. All drawings are not to scale.
03. Concrete mix as follows.

Footing Concrete	- 1:2:4
Screed Concrete	- 1:3:6
Column, Beams, lintels	- 1:2:4

04. Stirrup curtailment is 10D (D-Diameter of bar)
05. Clear covers as follows:

Column base	- 50mm
Column shaft, beams, slab	- 30mm

06. Anchorage for beam 10D for both side (D-Diameter of bar)
07. Beam, column size 225 x 350, 225 x 225
08. Slab 12mm dia. bars @110mm c/c both directions

Drawing 05

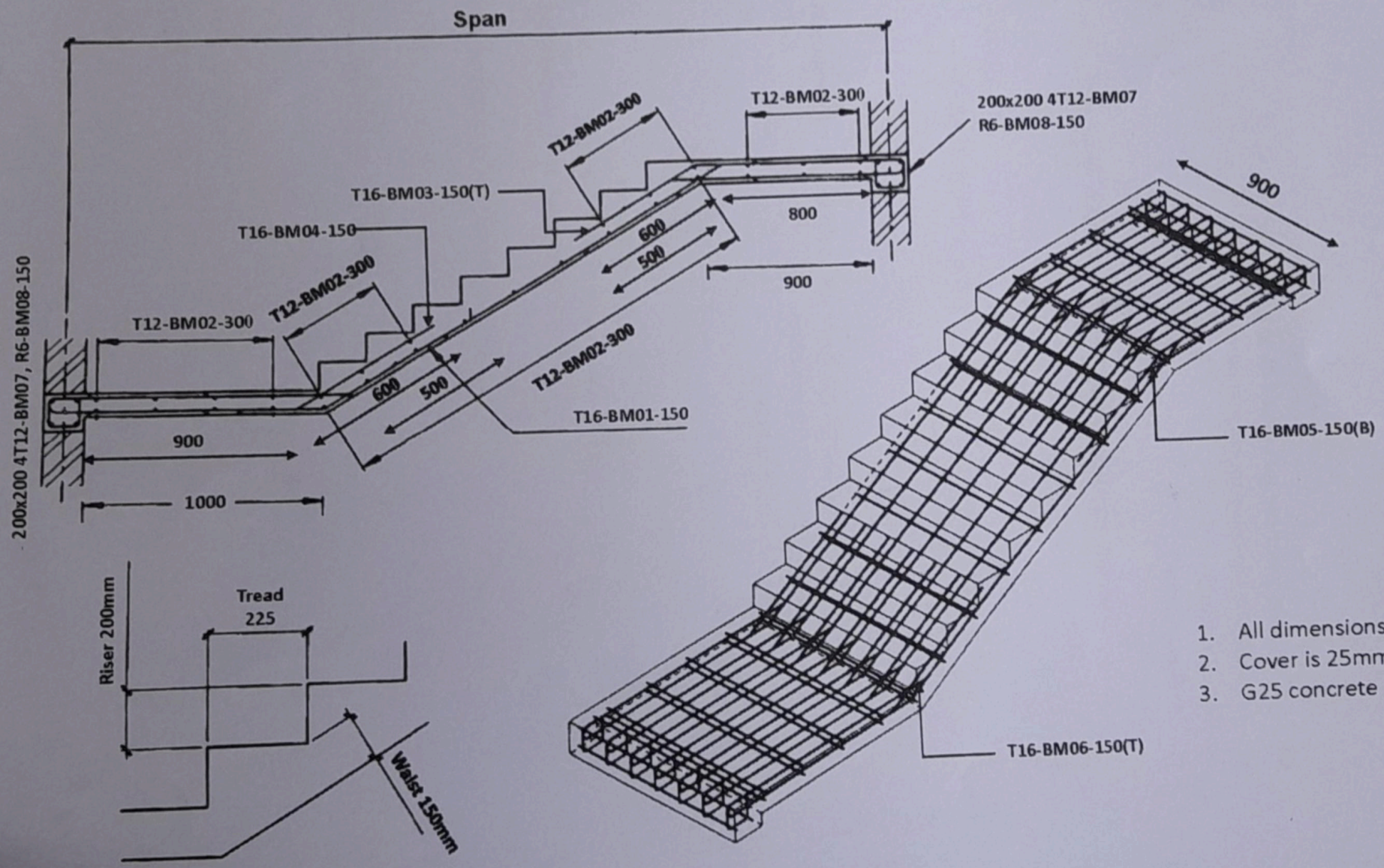

1. All dimensions are in mm
2. Cover is 25mm
3. G25 concrete