Higher National Diploma in Engineering (Electrical)
Fourth Year, First Semester Examination – 2019
EE 3212 – Broadcast Technology

Instructions for Candidates:
Answer any **FIVE (05)** questions
All Questions carry equal Marks

No. of questions: **06**
No. of pages : **03**
Time allowed : **(03) Three hours**

01.

(i). Explain the term 'Broadcasting' and mention the functions performing in broadcasting engineering. **(04 Marks)**

(ii). Compare and contrast 'Stereo Recording' and 'Mono Recording'. **(04 Marks)**

(iii). Briefly describe the three (03) techniques used by human ear to detect and locate sounds in the full sphere surrounding. **(06 Marks)**

(iv). Briefly explain how stereo sound is recoded in; **(06 Marks)**
(a).ZENITH-GE system
(b).Stereo disc

[Total 20 Marks]

02.

(i). What is the frequency value selected for the 'Pilot Tone'? **(01 Marks)**

(ii). The following block diagram shows a 'VHF FM stereo encoder'.
(a).State the components marked as 'A', 'B', 'C' and 'D'. **(02 Marks)**
(b).Briefly explain how it works. **(03 Marks)**

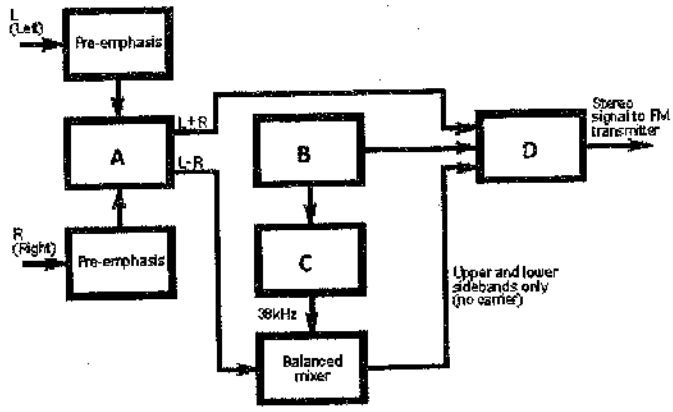

Figure 2(a)

(c). What is the AM modulation technique used in producing the FM Stereo Multiplex (MPX) signal? **(02 Marks)**

(iii). What are the advantages of Super-Heterodyning in FM receivers? **(02 Marks)**

(iv). Give the following specifications for FM broadcasting in Sri Lanka.

(04 Marks)

Parameter	**Figures and Details**
Frequency Band	
Channel Width	
Audio Subcarrier Frequency	
Stereo Centre Frequency	

(v). Write short notes on followings. **(06 Marks)**

(a). Stereo Indicator and Stereo/Mono switch

(b). Cross talk between L and R channels

[Total 20 Marks]

03.

(i). What is the "frequency interleaving"? **(02 Marks)**

(ii).

(a). Draw the block diagram of Quadrature modulator which is used to encode colour difference signals. **(03 Marks)**

(b). Among colour difference signals, why is not (G-Y) chosen for transmission in television broadcasting? **(02 Marks)**

(iii). Briefly explain Additive Colour Mixing. **(03 Marks)**

(iv). Draw the simplified block diagram of colour camera tube. **(05 Marks)**

(v). Justify the choice of a rectangular frame width to height ratio equal to 4/3 for TV transmissions and receptions. **(05 Marks)**

[Total 20 Marks]

04.

(i). Draw a diagram of 'Black and white picture tube' at television receiver and mark its parts. **(05 Marks)**

(ii). Draw the simplified block diagram of Monochrome television transmitter and explain how it works. **(06 Marks)**

(iii). Draw the simplified block diagram of colour television receiver. **(05 Marks)**

(iv).

(a). What are the three main components in Composite Video Signal (CVS)? **(03 Marks)**

(b). What is the device at the television receiver, which selects the desired channel's frequency band and converts it to the common IF band of frequencies? **(01 Marks)**

[Total 20 Marks]

05.

(i). Briefly describe 'Progressive scanning' and 'Interlace scanning' **(06 Marks)**

(ii). Explain the horizontal and vertical scanning in television system with illustrative diagrams by mentioning trace & retrace time periods clearly. **(06 Marks)**

(iii). Explain the reasons of having front porch and back porch of the horizontal blanking period. **(04 Marks)**

(iv). Write short notes on followings. **(04 Marks)**

(a). Delta-gun C.R.T.

(b). Shadow Mask

[Total 20 Marks]

06.

(i). What are the advantages and disadvantages of DSP systems? **(04 Marks)**

(ii). Compare Finite-duration Impulse Response (FIR) filters with Infinite Duration Impulse Response (IIR) filters. **(05 Marks)**

(iii). Explain MPEG-Audio (Layers 1, 2 and 3). **(03 Marks)**

(iv). What is Nyquist Sampling Theorem? Explain the importance of using anti-aliasing filter just before sampling in Digital to Analog converter. **(03 Marks)**

(v). Write short notes on followings. **(05 Marks)**

a) Pulse Code Modulation (PCM)

b) Delta Modulation (DM)

[Total 20 Marks]