Higher National Diploma in Engineering
Fourth Year, First Semester Examination - 2022
EE 3214 - Construction & Protection of Electrical Systems

Instructions for Candidate:
Answer five questions
All questions carry same marks

No. of Questions: 6
No. of Pages: 4
Time: 3 (hours)

1.

i.) Write **three** advantages of using per unit system to power system analysis (3 marks)

ii.) If the power base is S_b, phase voltage base V_b and base line voltage $V_{b,LL}$. Write expressions to calculate the base current and base impedance for single phase and three systems (4 marks)

iii.) Draw the single phase equivalent per unit reactance diagram for the power system shown in figure Q1. Consider the system power base of 250 MVA and voltage of 24kV. (13 marks)

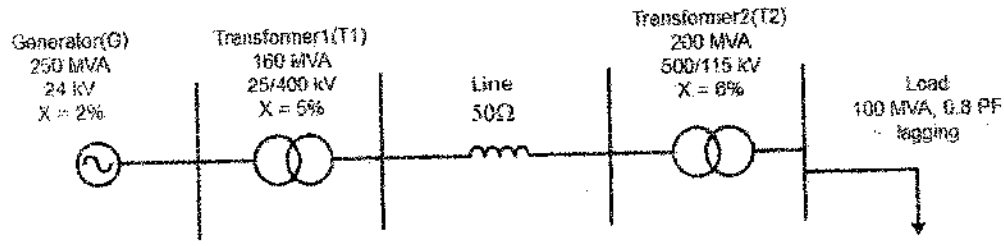

Figure: Q1

[Total 20 Marks]

2.

i.) Briefly explain what is a **fault** in a power system and describe the importance performing of **fault analysis** in a power system (4 marks)

ii.) Briefly explain the fault types, **symmetrical faults,** and **asymmetrical faults** (4 marks)

iii.) The generator station single-line diagram is shown in Figure Q2.

a) Calculate the fault current at F

b) Calculate the fault level at F

(12 marks)

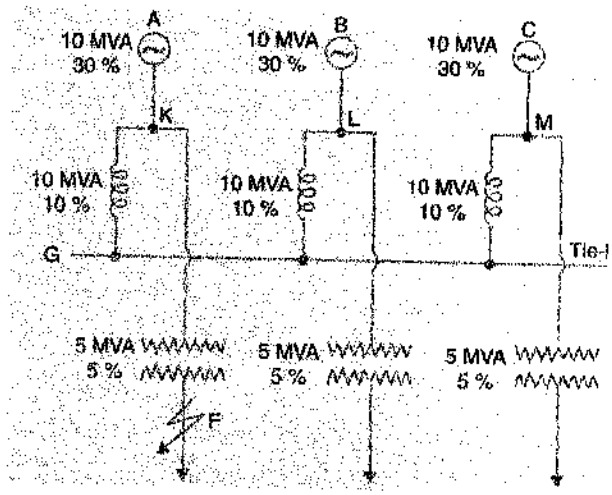

Figure: Q2

[Total 20 Marks]

3.

i.) Describe **three** types of asymmetrical faults that occurred in the power system (3 marks)

ii.) What are the different types of series reactors used in power systems? Briefly describe the requirements of such reactors and explain the advantages and disadvantages of each type (7 marks)

Figure Q3 shows an L-L-G fault that occurred in a power system. Obtain an expression for the fault current in terms of phase voltages of the source, sequence impedances, Z_1, Z_2, Z_0, and fault impedance Z_f using symmetrical components analysis. (10 marks)

iii.)

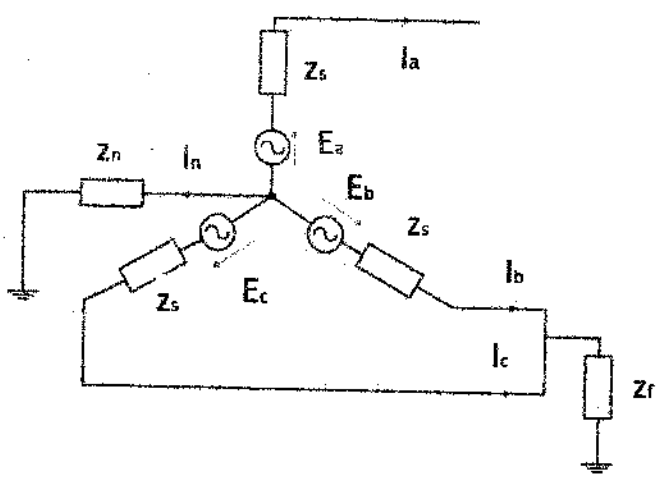

Figure: Q3

[Total 20 Marks]

4.

i.) Briefly describe the main tasks performed by power system protection system

(3 marks)

ii.) Briefly explain the following terms related to power system protection and protective relays;

a) Selectivity of a relay
b) Reliability of protective relay
c) Protection zones
d) Primary and backup protection

(8 marks)

iii.) A 400/5 A CT is used with over current relay and current setting is chosen as 150%. Calculate the minimum fault current at which the relay operates.

(3 marks)

iv.) Determine the time of operation of a 5A over-current relay having a 125% current setting and TSM of 0.4, connected to the supply circuit through 400/5 CT. If the fault current is 4760 A, find the time taken to operate the relay. If the operating time is need to be 2 s, what would be the required TSM

(6 marks)

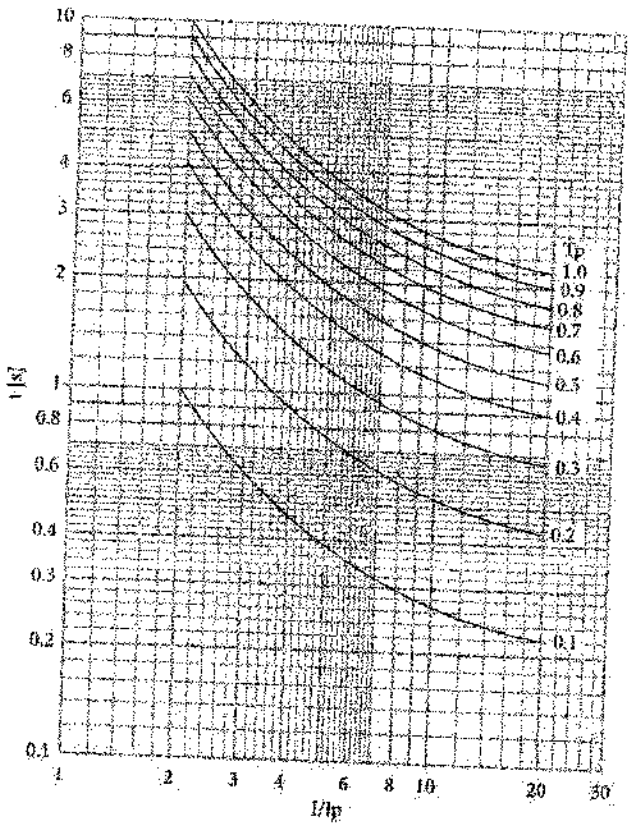

[Total 20 Marks]

5.

i.) State **four** generator faults (4 marks)

ii.) Draw the differential protection scheme for the generator and describe the operation of that protection scheme

(6 marks)

iii.) A 10MVA, 6.6 kV, 3-phase star connected alternator is protected by Merz-Price circulating current system. If the use current transformer ratio is 1000/5 and minimum operating current of the relay is 0.75 A. Neutral point earth resistance is 5 Ω. Total resistance of the each winding is 0.6 Ω. Calculate;

a) percentage of each phase of the stator winding, which is unprotected against earth faults when machine operate at normal voltage

(6 marks)

(7 Minimum resistance to provide 90% protection (4 marks)

[Total 20 Marks]

6.

i.) What is the main protection scheme use for **bus bar protection**? Briefly describe the method with suitable diagrams

(4 marks)

ii.) Explain the construction & operation of Buchholz relay

(6 marks)

iii.) State **four** common motor faults

(4 marks)

iv.) A 3-phase transformer having line voltage ratio of 400 V /11 kV is connected in star/delta connection. CT on the LV side have current ratio of 500/5. What must be the CT ratios of HV side CT.?

(6 marks)

[Total 20 Marks]