Higher National Diploma in Engineering (Electrical)

4th Year First Semester Examination – 2021

EE 3206 – Robotics & Automation

Instructions to Candidates:
Answer **only five (05)** questions.
Each question carries equal (20) marks

No. of questions : 06
No. of pages : 03
Time : **03 hours**

Q1) a) Briefly explain the Solid-State Devices and state three advantages of SSD. (05 Marks)

b) Briefly explain the following terms. (06 Marks)

i. MTTF (Mean time to Failure)
ii. MTTR (Mean time to Repair)
iii. MTBF (Mean time Between Failure)

c) A Machine that fails four times over the span of a workday. The time spent repairing each of those breakdowns totals one and half hour. Calculate MTTR? (04 Marks)

d) Clearly state the silicon wafer preparation stages. (05 Marks)

Q2) a) What are the classifications of Sensors and clearly state four examples for each one. (06 Marks)

b) Briefly explain two types of Proximity sensors with their applications. (04 Marks)

c) Rotary encoders are manufactured in two basic forms. Briefly describe rotary encoder forms. (04 Marks)

d) What are the types of actuators and categorize the actuators base on their motion type with two examples. (06 Marks)

Q3) a) Clearly State the main six (06) types of Robot Manipulator joints. (03 Marks)

b) Industrial Robot Manipulators can be divided into five (05) main types based on their workspace geometry. State those Robot Manipulators and briefly explain any two (02) of them with the help of diagrams. (3+6= 09 Marks)

c) State three (03) types of Motion of a Robot Wrist by using clear sketch. (05 Marks)

d) State three (03) basic methods for programming the industrial robots. (03 Marks)

Q4) a) State three (03) type of gear drives and three (03) type of belt drives used in industrial applications. (06 Marks)

b) The gearing of a machine tool is shown in **Figure no Q4.1** The motor shaft is connected to gear A and rotates at 200 R.P.M. The gear wheels B, C, D and E are fixed to parallel shafts rotating together. The final gear F is fixed on the output shaft. What is **the speed** and **rotational direction** of gear F ? (08 Marks)

The number of teeth on each gear are as given below:

($T_A = 50$, $T_B = 30$, $T_C = 10$, $T_D = 25$, $T_E = 20$, $T_F = 30$)

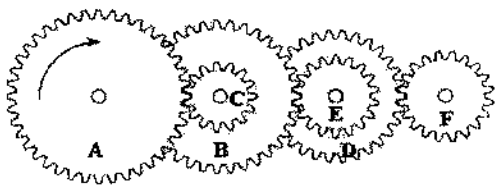

Figure No: Q4.1

c) What is the mean by DOF (Degree of freedom)? (02 Marks)

d) State the Grubler's equation and by using Grubler's equation, calculate the number of DOF for kinematic system shown in **Figure no Q4.2.** (04 Marks)

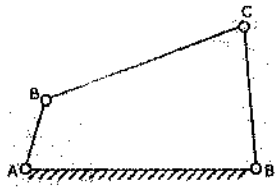

Figure No: Q4.2

Q5) a) What is mean by Forword Kinematics and Inverse Kinematics of Robot Manipulator System. (04 Marks)

b) The 2 DoF Robot manipulator system is shown in **Figure Q5**. (12 Marks)

I. If θ_1 and θ_2 are known angle values, derive the equation for find the arm end position (X, Y) according to the **forward kinematics**.

II. Derive the equation for find the joint angles θ_1, θ_2 of the **inverse kinematics** to place the arm end position (X, Y).

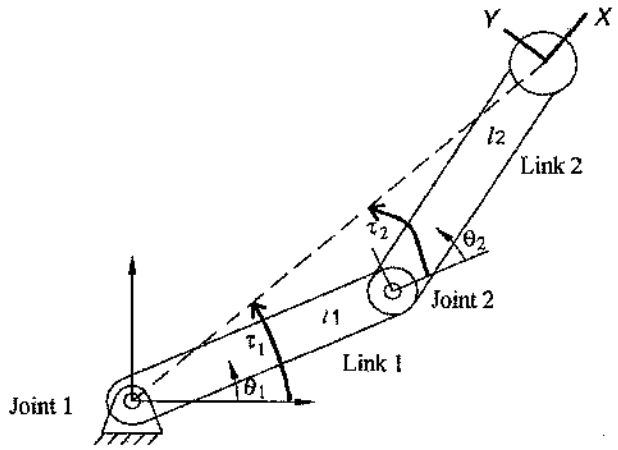

Figure No: Q5

c) Clearly state two types of Robot end effectors with three examples for each one. (04 Marks)

Q6) a) Clearly explain about the pneumatics & their usage in industry. (04 Marks)

b) State four advantages and four disadvantages of pneumatic system. (08 Marks)

(c) What are the main pneumatic system components are used in pneumatic system design? (04 Marks)

(d) Clearly explain the Repeatability and accuracy of an Industrial robot system using a suitable sketch. (04 Marks)