Higher National Diploma in Engineering (Electrical)

4th Year First Semester Examination – 2023

EE 3206 – Robotics & Automation

Instructions to Candidates:
Answer only five questions.
Each question carries equal (20) marks

No. of questions : 06
No. of pages : 03
Time : **03 hours**

Q1) a) Briefly explain about Solid-State Devices (SSD) and state **three** advantages of SSDs. (05 Marks)

b) Distinguish between the intrinsic semiconductor and extrinsic semiconductor? (04 Marks)

c) What stages are involved in silicon wafer preparation? (05 Marks)

d) Explain the printed circuit board (PCB) manufacturing process by including all steps. (06 Marks)

Q2) a) State six (06) reasons why sensors are essential for industrial robots. (03 Marks)

b) What are the key elements of industrial robots? Explain each. (04 Marks)

c) Classify **sensors** based on their output signal and provide four (04) examples for each type. (05 Marks)

d) State the classification of **Actuators** according to the input signal and output motion. (04 Marks)

e) What are the main two types of **rotary encoders** and explain their operation. (04 Marks)

Q3) a) List five (04) types of **joints** found in a Robot Manipulator. (04 Marks)

b) Explain the meaning of **DOF** (degrees of freedom) in the context of robotics and mechanical systems. (02 Marks)

c) State five (05) types of lower pairs and clearly mention the **DOF** of each lower pair. (05 Marks)

d) State the five (05) main types of industrial robot manipulators based on their **workspace geometry**. (05 Marks)

e) Briefly describe about **Cartesian** robot configuration with help of the workspace of the robot and state two applications of Cartesian robot system. (04 Marks)

Q4) a) State three type of **Gear** drives and three type of **Belt** drives used in industrial applications. (06 Marks)

b) A motor gear has 24 teeth and revolves at 100 rev/min. The driven gear has 8 teeth. Calculate its rotational speed? (03 Marks)

c) State three advantages and three applications of the pneumatic systems. (03 Marks)

d) Clearly explain the operation of FRL unit in pneumatic system. (04 Marks)

e) What are the main devices used in electro-pneumatic system? (04 Marks)

Q5) a) Clearly state two (02) types of **robot end effectors** with three (03) examples for each one. (04 Marks)

b) Sketch and describe two (02) commonly used **robot cell** layouts in the industry, providing examples for each. (04 Marks)

c) What is mean by **Forward Kinematics** and **Inverse Kinematics** of robot manipulator system? (04 Marks)

d) The 2 DoF Robot manipulator system is shown in Figure No 02.

i. If θ_1 and θ_2 are known angle values, derive the equation for find the arm end position (X, Y) according to the **forward kinematics**. (03 Marks)

ii. Derive the equation for find the joint angles θ_1, θ_2 of the **inverse kinematics** to place the arm end position (X, Y). (05 Marks)

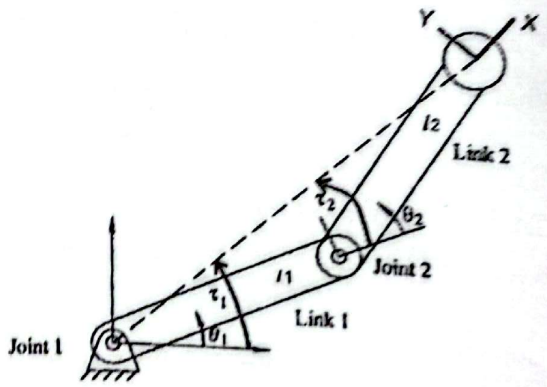

Figure No 02

Q6) a) Draw a **robot wrist** mechanism and state the main motion types of the robot wrist.

b) i. State four (04) applications of an **H-bridge** circuit

ii. Clearly explain the operation of H-bridge motor controlling circuit using suitable diagram.

c) i. What are the main types of **brake systems** used in industrial robots?

ii. Briefly explain the **Chain Drive System** and its types.

d) Provide a brief explanation for the following robotics-related terms:

i. Tachometers

ii. Resolvers