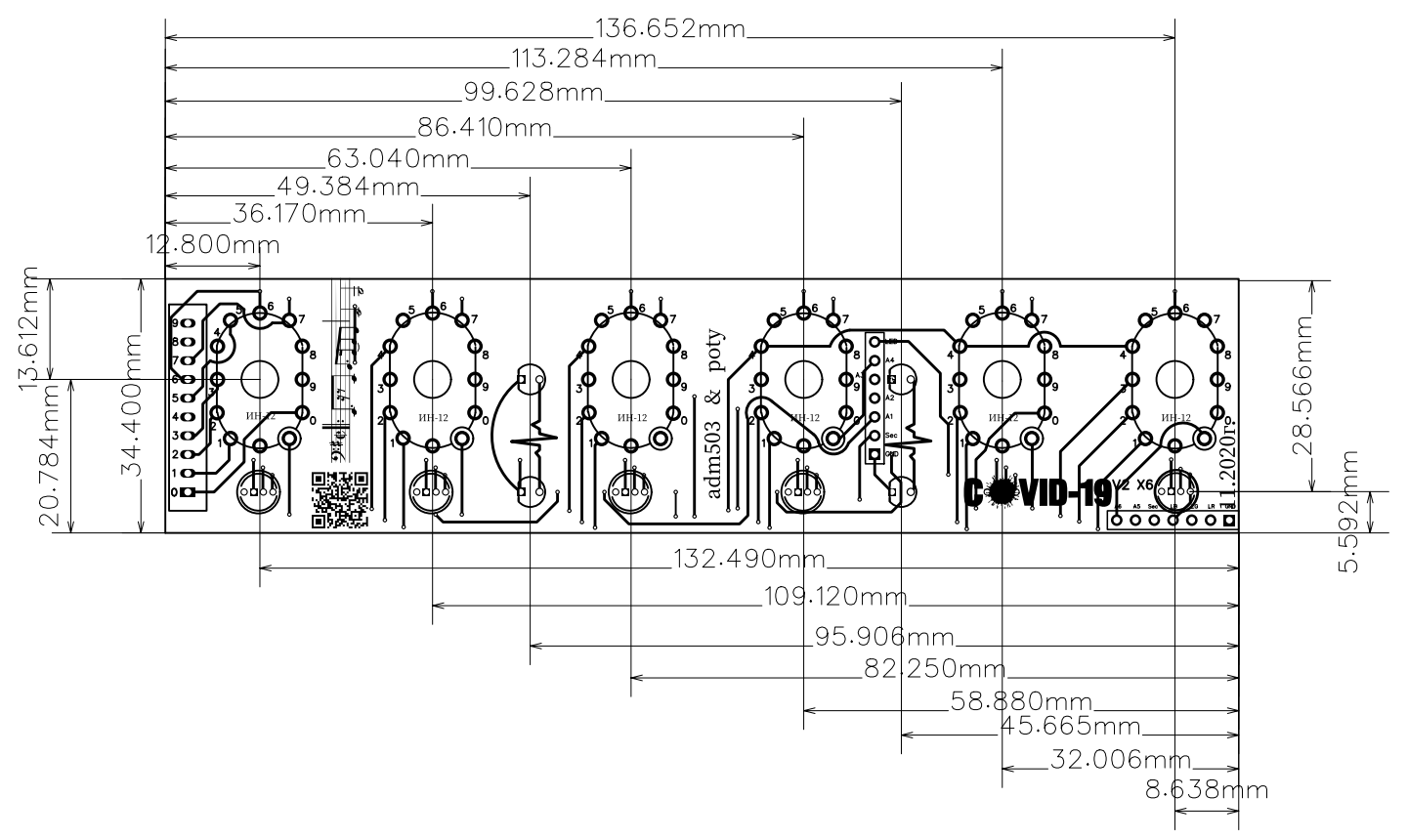
136.652mm
113.284mm
99.628mm
86.410mm
63.040mm
49.384mm
36.170mm
12.800mm
13.612mm
34.400mm
20.784mm
28.596mm
5.592mm
132.490mm
109.120mm
95.906mm
82.250mm
58.880mm
45.665mm
32.006mm
8.638mm
ИН-12
adm503 & poty
COVID-19
V2 X6
11.2020г.

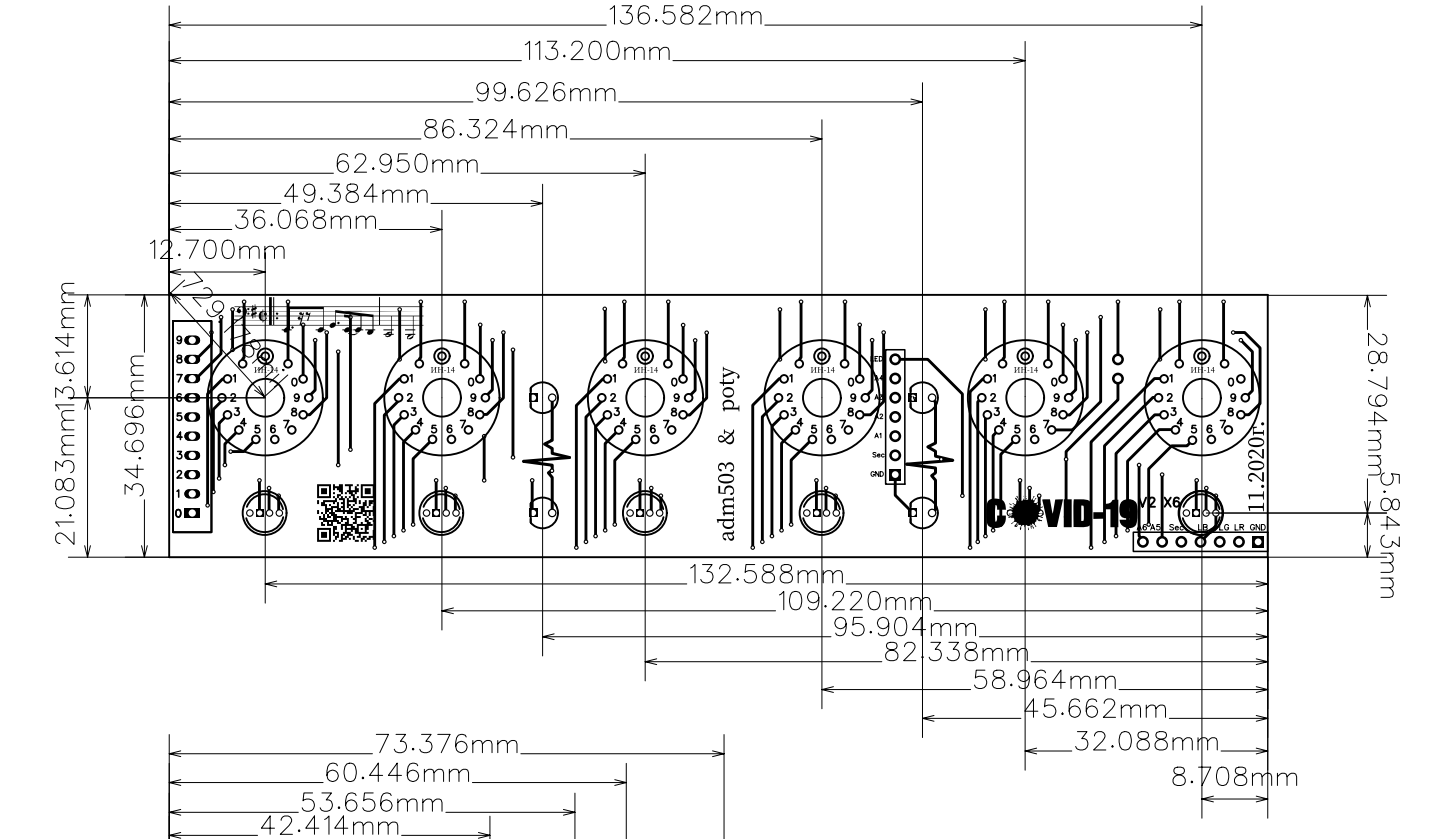
136.582mm
113.200mm
99.626mm
86.324mm
62.950mm
49.384mm
36.068mm
12.700mm
13.614mm
34.696mm
21.083mm
28.794mm
5.843mm
132.588mm
109.220mm
95.904mm
82.338mm
58.964mm
45.662mm
32.088mm
8.708mm
ИН-14
adm503 & poty
COVID-19
V2 X6
11.2020г.

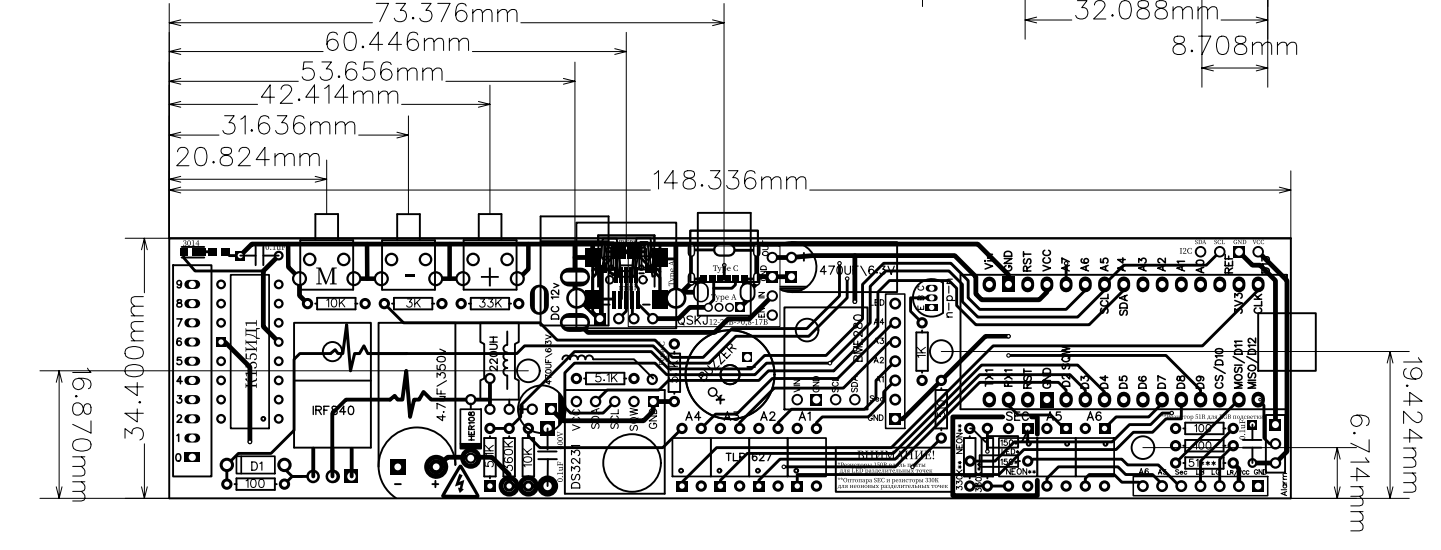
73.376mm
60.446mm
53.656mm
42.414mm
31.636mm
20.824mm
148.336mm
34.400mm
16.870mm
19.424mm
6.714mm
IRF540
DS3231
TLP627
ATMEGA328P
DC 12v
470UF/16V
4.7UF/350V
22UH
1N5819
1N4148
D1
100
10K
3K
33K
5.1K
1K
560K
SEC
A5
A6
A4
A2
A1