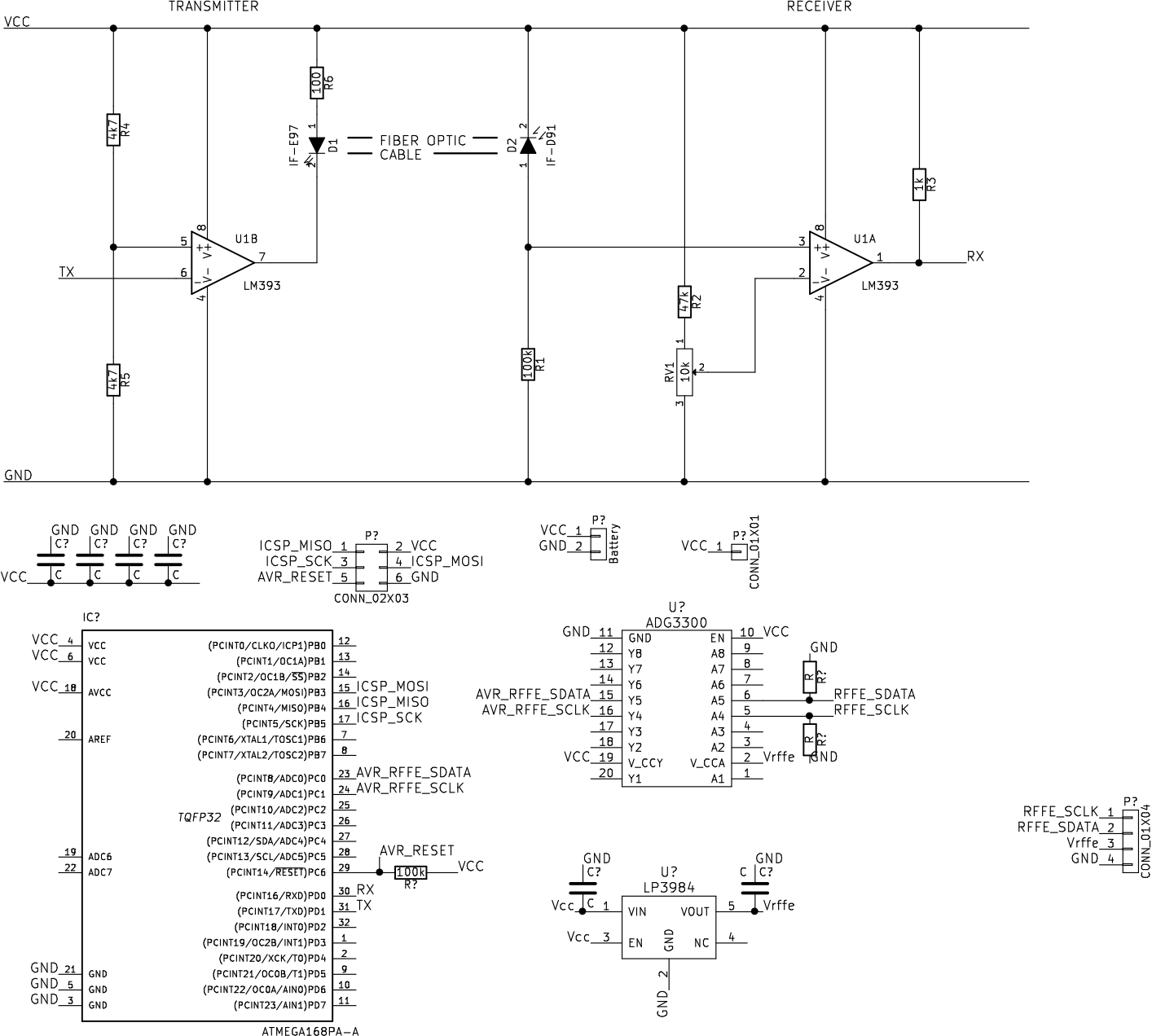
TRANSMITTER
RECEIVER
VCC
GND
TX
RX
4k7 R4
4k7 R5
100 R6
IF-E97 D1
FIBER OPTIC CABLE
D2 IF-D91
U1B LM393
U1A LM393
100k R1
47k R2
RV1 10k
1k R3
GND C? C
ICSP_MISO
ICSP_SCK
AVR_RESET
VCC
ICSP_MOSI
GND
CONN_02X03
VCC GND Battery
CONN_01X01
IC?
TQFP32
ATMEGA168PA-A
AVR_RFFE_SDATA
AVR_RFFE_SCLK
U? ADG3300
RFFE_SDATA
RFFE_SCLK
Vrffe
U? LP3984
VIN VOUT EN NC
CONN_01X04