System-Theoretic Analysis of a Class of Battery Equalization Systems: Mathematical Modeling and Performance Evaluation

Haoqi Chen, Liang Zhang, *Member, IEEE*, and Yehui Han, *Member, IEEE*

***Abstract*—Battery equalizers are widely used in multi-battery systems to maintain balanced charge among individual battery cells. While the research on the hardware realization of battery equalizers has received significant attention, rigorous analysis of the battery equalization process at the system level remains largely unexplored. In this paper, we study three types of battery equalization system structures: series-based, layer-based, and module-based. Specifically, we derive mathematical models that describe the system-level behavior of the battery equalization processes under these equalization structures. Then, based on the mathematical models, analytical methods are developed to evaluate the performance of the equalization processes. In addition, we carry out statistical analysis to compare the performance of the three equalization structures considered.**

***Index Terms*—Battery equalization, equalization time, layer-based equalization, module-based equalization, serial equalization.**

NOMENCLATURE

B	Number of batteries in a battery equalization system.
b_i	The ith battery in the system.
e_i	The ith equalizer in the system.
τ	Duration of a working cycle (time slot) of an equalizer.
r_i	Amount of charge that equalizer e_i can transfer during one working cycle.
$BG(g,i)$	The g-battery battery group starting with battery b_i.
$t_{\text{ideal}}(g,i)$	Ideal equalization time of battery group $BG(g,i)$.
T_e^{series}	Actual equalization time of a series-based battery equalization system.
T_e^{layer}	Actual equalization time of a layer-based battery equalization system.
T_e^{module}	Actual equalization time of a module-based battery equalization system.
$\widehat{T}_e^{\text{series}}$	Estimated equalization time of a series-based battery equalization system.
$\widehat{T}_e^{\text{layer}}$	Estimated equalization time of a layer-based battery equalization system.
$\widehat{T}_e^{\text{module}}$	Estimated equalization time of a module-based battery equalization system.

Manuscript received February 13, 2014; revised May 14, 2014; accepted May 31, 2014. Date of publication June 13, 2014; date of current version April 14, 2015. The review of this paper was coordinated by Prof. A. Khaligh.

H. Chen is with the Department of Industrial and Manufacturing Engineering, University of Wisconsin–Milwaukee, Milwaukee, WI 53211 USA (e-mail: haoqi@uwm.edu).

L. Zhang is with the Department of Electrical and Computer Engineering, University of Connecticut, Storrs, CT 06269 USA (e-mail: liang@engr.uconn.edu).

Y. Han is with the Department of Electrical and Computer Engineering, University of Wisconsin–Madison, Madison, WI 53706 USA (e-mail: yehui@engr.wisc.edu).

Color versions of one or more of the figures in this paper are available online at http://ieeexplore.ieee.org.

Digital Object Identifier 10.1109/TVT.2014.2330692

I. INTRODUCTION

In recent years, the development of electric, hybrid electric, and plug-in hybrid electric technologies has become one of the most important directions in vehicular research [1]. In many of these applications, the battery is the one of the critical system components [2]. However, due to material and manufacturing constraints, an individual battery cell can only provide limited voltage and power. Therefore, in applications that require high voltage and/or high power (such as electric vehicles), multiple battery cells are often connected in series to meet the demand. Unfortunately, due to variations in manufacturing process, environment, usage, and other sources, the serially connected battery cells may contain different amounts of charge [3], and the unbalanced charge may lead to lower efficiency, shorter lifetime, and higher risk of fire and explosion. To maintain balanced charge in a battery system, various types of battery equalizers have been developed (see review papers [4] and [5]). Technologies used in the hardware realization of battery equalizers include but are not limited to dissipative resistance shunt [6], bidirectional dc–dc converters [7]–[9], switch capacitors [10]–[12], multiwinding transformers [13], and two-step buck–boost converters [14].

Lately, increasing research efforts have been invested in developing faster and more efficient battery equalization systems. For instance, a fuzzy-logic-based controller is developed in [15] to reduce system equalization time. However, the controller is tested only for a three-battery system. In addition, in [16], a new battery equalizer configuration is proposed, and its performance and cost effectiveness are analyzed. The proposed equalizer is tested using both computer simulations and physical experiment of a five-cell prototype system. In [17], a layer-based battery equalization system is developed. The efficacy of the structure is compared with the traditional series-based equalization structure, where all equalizers are connected in a series manner, using MATLAB simulations and physical

0018-9545 © 2014 IEEE. Personal use is permitted, but republication/redistribution requires IEEE permission.
See http://www.ieee.org/publications_standards/publications/rights/index.html for more information.
Authorized licensed use limited to: MINGYI. Downloaded on August 23,2024 at 16:54:30 UTC from IEEE Xplore. Restrictions apply.

circuit experiments of a four-battery system. In [18], a module-based battery equalization structure is proposed and is further studied in [14], [19], and [20], where the developed equalization system is tested on an 88-lithium-ion-cell battery system. In [21], a cell-to-bus equalization system is developed, which can achieve fast equalization speed with dc-bus regulation ability but at the cost of more high-voltage devices with high power ratings.

Despite these achievements, rigorous analysis of the equalization processes from the system level has rarely been carried out. Such studies are critical in system-level performance prediction, parameter optimization, and control algorithm design. Among the limited results in this area (see, for instance, [14]–[20]), the efficacy of each equalization system is demonstrated by very few specific examples. This approach, however, may be misleading since the equalization performance may depend on the initial status of battery charge, and it is not clear how well the examples used can represent the general case. Although it has been attempted to provide a formula to estimate the equalization time based on system parameters in [20], it is applicable only when the battery string contains just one battery cell to balance. Therefore, the performance of the equalization systems under general initial conditions must be studied based on sufficiently large sample size and rigorous statistical analysis to provide justified conclusions. While extensively experimenting with the physical systems is often impractical, computer simulations can be used to accomplish this task. In the current literature, computer softwares, such as MATLAB/Simulink, PSpice, etc., have already been applied to simulate the behavior of the electrical circuit of battery equalization systems. For instance, simulation frameworks of battery operation were developed in [22] and [23] based on MATLAB/Simulink. However, due to the limitations of the software, the simulations are usually time consuming, inflexible, and difficult to build or manage for systems with a large number of battery cells. Moreover, it is sometimes not necessary to include detailed circuit components to study the system-level behavior of the battery equalization process. Therefore, the goal of this paper is to *study battery equalization by introducing system-theoretic models of equalization processes in the frameworks of series-based equalization, layer-based equalization, and module-based equalization, respectively*. To carry out the analysis, mathematical models are constructed for each case considered. Then, analytical procedures are developed to evaluate the system equalization time based on the initial charge of the batteries. It should be noted that while there exist a number of equalization topologies and technologies, in this paper, we focus on only one class of equalizers, which transfers charge between the two adjacent groups of battery cells connected to it. Other equalization realizations (e.g., cell-to-bus equalization) will be discussed in future work. Finally, it should be emphasized that this paper focuses on system-level analysis rather than hardware realization.

The remainder of this paper is organized as follows: Section II presents the assumptions for battery systems with series equalization and formulates the mathematical model. Then, based on the mathematical model, we develop analytical methods for evaluation of the system equalization time. Similar analyses for layer- and module-based equalization systems are described in Sections III and IV, respectively. A comparative statistical study of the three equalization structures is carried out in Section V. Finally, conclusions and future work are given in Section VI. All proofs are included in the Appendix.

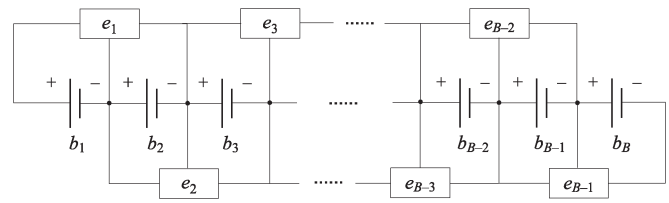

Fig. 1. Series-based battery charge equalization system.

II. Series-Based Equalization Structure

A. Model

1) Descriptive Model: Consider a battery charge equalization system shown in Fig. 1 defined by the following assumptions.

i) The system consists of B batteries, i.e., $b_1, b_2, \ldots, b_B$, connected in series, and $B-1$ equalizers, i.e., $e_1, e_2, \ldots, e_{B-1}$, connecting each consecutive pair of batteries.
ii) The equalizers have the same working cycle, i.e., τ. The time axis is slotted with slot duration τ. Equalizers begin operating at the beginning of each time slot.
iii) Each equalizer is characterized by its equalization rate, r_i (units of charge per time slot), $i = 1, \ldots, B-1$.
iv) If battery b_i has a larger state of charge (SOC) than b_{i+1} at the beginning of a time slot, then equalizer e_i transfers r_i units of charge from b_i to b_{i+1} during this time slot; if b_i has a lower SOC, then e_i makes the opposite transfer; if b_i and b_{i+1} have the same SOC, no transfer takes place between the two batteries during this time slot.
v) All batteries and equalizers are lossless.

In practice, the equalizers under a serial structure in Fig. 1 are designed to have identical parameters. Therefore, here, we assume that

$$r_i = r, \qquad \forall i \in \{1, \ldots, B\}. \tag{1}$$

Although the model defined by assumptions i)–v) contains no electrical components, the transfer of energy during equalization is captured at the system level. Clearly, this model applies to many kinds of equalizers regardless of the type of technology used. Therefore, this simplification can focus the study on the system performance of equalization rather than on hardware realization. Moreover, for simplicity, we assume in (v) that no energy is lost during the equalization process. Extensions of the study to systems with energy losses in batteries and/or equalizers will be considered in future work.

2) Mathematical Model: Let $x_i(n) \in [0, 1]$ denote the state of battery b_i at the end of time slot (i.e., working cycle) n, $i = 1, \ldots, B$, $n = 0, 1, \ldots$. In other words, the SOC of battery b_i is $100x_i(n)\%$. Then, the evolution of the system is given by

$$x_1(n+1) = x_1(n) + \operatorname{sgn}(x_2(n) - x_1(n)) \cdot r \tag{2}$$

Authorized licensed use limited to: MINCYT. Downloaded on August 23,2024 at 16:54:30 UTC from IEEE Xplore. Restrictions apply.

$$x_i(n+1) = x_i(n) + \mathrm{sgn}(x_{i-1}(n) - x_i(n)) \cdot r + \mathrm{sgn}(x_{i+1}(n) - x_i(n)) \cdot r, \quad i = 2, \ldots, B-1 \tag{3}$$

$$x_B(n+1) = x_B(n) + \mathrm{sgn}(x_{B-1}(n) - x_B(n)) \cdot r \tag{4}$$

where

$$\mathrm{sgn}(u) = \begin{cases} -1, & \text{if } u < 0 \\ 0, & \text{if } u = 0 \\ 1, & \text{if } u > 0. \end{cases} \tag{5}$$

Note that, in this formulation, the equalization rate r implies that an equalizer is capable of transferring $100r\%$ SOC during one time slot (working cycle).

Let

$$\bar{x} = \frac{1}{B}\sum_{i=1}^{B} x_i(0). \tag{6}$$

Clearly, the state with all x_i's equal to $\bar{x}$ is an equilibrium of the given system, and it is globally attractive. However, since the system defined by assumptions i)–v) operates in discrete time, limit cycle convergence around this equilibrium is possible. Let N_e^{series} denote the smallest number of time slots, i.e., working cycles, for the system to reach the equilibrium or the limit cycle. Then, the equalization time of the system, which is denoted as T_e^{series}, is given by

$$T_e^{\text{series}} = N_e^{\text{series}}\tau. \tag{7}$$

In practice, T_e^{series} is one of the most important performance measures of a battery charge equalization system. Therefore, in the following section, we will study the evaluation of T_e^{series} and its properties.

B. Performance Evaluation

To evaluate the equalization time T_e^{series} of the system defined by assumptions i)–v), one can "simulate" the mathematical model by iteratively calculating $x_i(n)$'s using (2)–(5) until convergence is observed. Although this approach can reduce the evaluation time significantly compared with simulating the actual electrical system, the amount of calculation may substantially increase when B increases. The long computation time may become the main obstacle to embed the evaluation process into a battery management system (BMS) for active control of the battery operations. Therefore, in this paper, the goal is to develop computationally efficient procedures based on analytical calculation to evaluate (or approximate) the equalization time of a battery equalization system. To accomplish this, we note that, in reality, it is very common that $r \ll 1$: For instance, if an equalizer with a working cycle of 0.001 s (i.e., 1-kHz frequency) is capable of transferring 10% SOC in 30 min, then the corresponding value of r in the mathematical model can be calculated as $0.1/(1800 \times 1000) = 0.56 \times 10^{-7}$. Thus, we consider the following continuous-time version of the system defined by (2)–(5):

$$\dot{x}_1(t) = \mathrm{sgn}(x_2(t) - x_1(t)) \cdot \widetilde{r} \tag{8}$$

$$\dot{x}_i(t) = \mathrm{sgn}(x_{i-1}(t) - x_i(t)) \cdot \widetilde{r} + \mathrm{sgn}(x_{i+1}(t) - x_i(t)) \cdot \widetilde{r} i = 2, \ldots, B-1 \tag{9}$$

$$\dot{x}_B(t) = \mathrm{sgn}(x_{B-1}(t) - x_B(t)) \cdot \widetilde{r} \tag{10}$$

where

$$\widetilde{r} = \frac{r}{\tau}. \tag{11}$$

For this system, state $[\bar{x}\ \bar{x}\ \ldots\ \bar{x}]$, i.e., the state with all x_i's equal to $\bar{x}$, is the unique equilibrium, and it is globally attractive. Moreover, since this system operates in continuous time, limit cycle convergence does not appear. Furthermore, let $y_i(t) = x_i(t) - \bar{x}$, $i = 1, \ldots, B$. Then, the system evolution can be expressed as

$$\dot{y}_1(t) = \mathrm{sgn}(y_2(t) - y_1(t)) \cdot \widetilde{r} \tag{12}$$

$$\dot{y}_i(t) = \mathrm{sgn}(y_{i-1}(t) - y_i(t)) \cdot \widetilde{r} + \mathrm{sgn}(y_{i+1}(t) - y_i(t)) \cdot \widetilde{r} i = 2, \ldots, B-1 \tag{13}$$

$$\dot{y}_B(t) = \mathrm{sgn}(y_{B-1}(t) - y_B(t)) \cdot \widetilde{r} \tag{14}$$

where

$$\sum_{i=1}^{B} y_i(t) = 0, \quad t \geq 0. \tag{15}$$

Under this formulation, state $[0\ 0\ \ldots\ 0]$ becomes the system equilibrium.

Let $\widetilde{T}_e^{\text{series}}$ denote the equalization time of the system defined by (12)–(15), i.e., the smallest t, such that $y_i(t) = 0$ for all $i \in \{1, \ldots, B\}$. Then, for $r \ll 1$, the equalization times of the original system, i.e., the discrete-time system defined by (2)–(5), and its continuous-time counterpart (12)–(15), should satisfy the following relationship:

$$T_e^{\text{series}} \approx \widetilde{T}_e^{\text{series}}. \tag{16}$$

Theorem 1: For $B \in \{2, 3\}$, the equalization time of a battery equalization system defined by (12)–(15) can be calculated as follows:

$$\widetilde{T}_e^{\text{series}}(B=2) = \frac{|y_1(0)|}{\widetilde{r}} = \frac{|y_2(0)|}{\widetilde{r}} \tag{17}$$

$$\widetilde{T}_e^{\text{series}}(B=3) = \max\left\{\frac{|y_1(0)|}{\widetilde{r}}, \frac{|y_3(0)|}{\widetilde{r}}\right\}. \tag{18}$$

Thus, the equalization time of a battery system defined by assumptions i)–v) with $B = 2$ or $B = 3$ can be calculated (approximated) for any given initial condition of battery charge. To evaluate the equalization time for systems with $B \geq 4$ batteries, we introduce the following notion.

Definition 1: Battery group (BG): a group of no more than $(B-1)$ batteries that are consecutively connected in a system defined by assumptions i)–v).

Let g denote the number of batteries in a BG. Then, for a B-battery system, g takes values from $\{1, \ldots, B-1\}$, and thus, there are a total of $(B-1)(B+2)/2$ different BGs. Let $BG(g, i)$ denote the g-battery BG starting with battery b_i,

Authorized licensed use limited to: MINCYT. Downloaded on August 23,2024 at 16:54:30 UTC from IEEE Xplore. Restrictions apply.

$g \in \{1, \ldots, B-1\}$, $i \in \{1, \ldots, B-g+1\}$. In other words, $BG(g,i)$ represents battery string $b_i - b_{i+1} - \cdots - b_{i+g-1}$. In addition, BG $BG(g,i)$ is referred to as a *boundary BG* if $i = 1$ or $i = B-g+1$ and *internal BG*, otherwise.

During the equalization process, the SOC of each battery, $x_i(t)$, tends to $\bar{x}$, i.e., $y_i(t)$ tends to 0. Moreover, for each BG, summation $\sum_{j=i}^{i+g-1} y_j(t)$ also tends to 0. For boundary BGs, the rate of this process is upper-bounded by the equalization rate of the equalizer at the end, i.e., $\widetilde{r}$; whereas for internal groups, the upper bound is the total equalization rates of the equalizers on both ends of the BG, i.e., $2\widetilde{r}$. Therefore, we define the *ideal equalization time*, i.e., $t_{\text{ideal}}(g,i)$, of BG $BG(g,i)$, $g \in \{1, \ldots, B-1\}$, $i \in \{1, \ldots, B-g+1\}$, as follows.

- If $BG(g,i)$ is a boundary BG, then

$$t_{\text{ideal}}(g,i) = \frac{|\sum_{j=i}^{i+g-1} y_j(0)|}{\widetilde{r}} = \frac{|\sum_{j=i}^{i+g-1} y_j(0)|}{r} \cdot \tau. \quad (19)$$

- If $BG(g,i)$ is an internal BG, then

$$t_{\text{ideal}}(g,i) = \frac{|\sum_{j=i}^{i+g-1} y_j(0)|}{2\widetilde{r}} = \frac{|\sum_{j=i}^{i+g-1} y_j(0)|}{2r} \cdot \tau. \quad (20)$$

It is also possible to combine the two given expressions into one as follows:

$$\begin{aligned} t_{\text{ideal}}(g,i) &= \frac{|\sum_{j=i}^{i+g-1} y_j(0)|}{\widetilde{r}\left[2 - I_{\{1\}}(i) - I_{\{B-g+1\}}(i)\right]} \\ &= \frac{|\sum_{j=i}^{i+g-1} y_j(0)|}{r\left[2 - I_{\{1\}}(i) - I_{\{B-g+1\}}(i)\right]} \cdot \tau \\ &\quad g \in \{1, \ldots, B-1\},\ i \in \{1, \ldots, B-g+1\} \end{aligned} \quad (21)$$

where $I_A(x)$ is the indicator function given by

$$I_{\mathbf{A}}(x) = \begin{cases} 1, & \text{if } x \in \mathbf{A} \\ 0, & \text{otherwise.} \end{cases} \quad (22)$$

Definition 2: Bottleneck BG (BNBG): the BG with the longest ideal equalization time.

Next, we use the ideal equalization time of the BNBG to estimate the equalization time of the system, which is denoted as $\widehat{T}_e^{\text{series}}$. Then, based on Definition 2, we have

$$\widehat{T}_e^{\text{series}} = \max_{g \in \{1,\ldots,B-1\}, i \in \{1,\ldots,B-g+1\}} t_{\text{ideal}}(g,i). \quad (23)$$

Since $t_{\text{ideal}}(g,i)$ is a linear function of τ, we can approximate the number of time slots until equalization as follows:

$$\widehat{N}_e^{\text{series}} = \frac{\widehat{T}_e^{\text{series}}}{\tau} = \max_{g \in \{1,\ldots,B-1\}, i \in \{1,\ldots,B-g+1\}} n_{\text{ideal}}(g,i) \quad (24)$$

where

$$n_{\text{ideal}}(g,i) = \frac{t_{\text{ideal}}(g,i)}{\tau} = \frac{|\sum_{j=i}^{i+g-1} y_j(0)|}{r\left[2 - I_{\{1\}}(i) - I_{\{B-g+1\}}(i)\right]}$$
$$g \in \{1, \ldots, B-1\}, i \in \{1, \ldots, B-g+1\}. \quad (25)$$

TABLE I
ACCURACY OF PROPOSITION 1: AVERAGE ESTIMATION ERROR ϵ_s FOR VARIOUS B AND r

Average ϵ_s	$r = 10^{-5}$	$r = 10^{-6}$	$r = 10^{-7}$
$B = 4$	0.0037%	0.0004%	$< 0.0001\%$
$B = 8$	0.0096%	0.0010%	0.0001%
$B = 16$	0.0287%	0.0028%	0.0003%
$B = 32$	0.0827%	0.0083%	0.0009%
$B = 64$	0.2324%	0.0212%	0.0024%

Proposition 1: The equalization time of a battery charge system defined by (12)–(15) is equal to the ideal equalization time of the BNBG of the system, i.e.,

$$\widetilde{T}_e^{\text{series}} = \widehat{T}_e^{\text{series}} \quad (26)$$

and, therefore

$$T_e^{\text{series}} \approx \widehat{T}_e^{\text{series}}. \quad (27)$$

Justification: To justify the accuracy of Proposition 1, numerical experiments are carried out. Specifically, a C++ program is developed to calculate the state evolution of the battery equalization system defined by assumptions i)–v) using mathematical equations (2)–(5). Using this program, the number of time slots until equalization of the system, i.e., N_e^{series}, can be obtained. Then, N_e^{series} is compared with the estimated equalization time, i.e., $\widehat{N}_e^{\text{series}}$. Clearly, if Proposition 1 is true, then relationship $\widehat{N}_e^{\text{series}} \approx N_e^{\text{series}}$ should be observed under the same initial condition of battery charge. To carry out the experiments, we selected $B \in \{4, 8, \ldots, 64\}$ and $r \in \{10^{-5}, 10^{-6}, 10^{-7}\}$. For each B, a total of 50 000 different formations of initial battery charge are generated with $x_i(0)$'s selected randomly and independently according to uniform distribution $U(0,1)$. For each initial battery charge formation, we evaluate its corresponding N_e^{series} using simulation and calculate $\widehat{N}_e^{\text{series}}$ based on (24), and evaluate the relative error based on

$$\epsilon_s = \frac{\left|T_e^{\text{series}} - \widehat{T}_e^{\text{series}}\right|}{T_e^{\text{series}}} \cdot 100\% = \frac{\left|N_e^{\text{series}} - \widehat{N}_e^{\text{series}}\right|}{N_e^{\text{series}}} \cdot 100\%. \quad (28)$$

It can be seen from the given equation that parameter τ is not needed in the evaluation of ϵ_s and, thus, is not specified in the justification. The average values of ϵ_s for various values of B and r are summarized in Table I. As one can see, the error increases with the number of batteries in the system. The errors observed are mainly due to the limit cycle convergence observed in the discrete-time system. This is reflected in the fact that smaller r leads to smaller estimation error. Since r is typically very small in practice, we claim that Proposition 1 holds. ■

Clearly, Proposition 1 provides an efficient approach for analytical evaluation of the equalization time in a battery equalization system defined by assumptions i)–v) without extensive calculation of system state evolution. Using Proposition 1, one only needs to calculate the ideal equalization time of all

Authorized licensed use limited to: MINCYT. Downloaded on August 23,2024 at 16:54:30 UTC from IEEE Xplore. Restrictions apply.

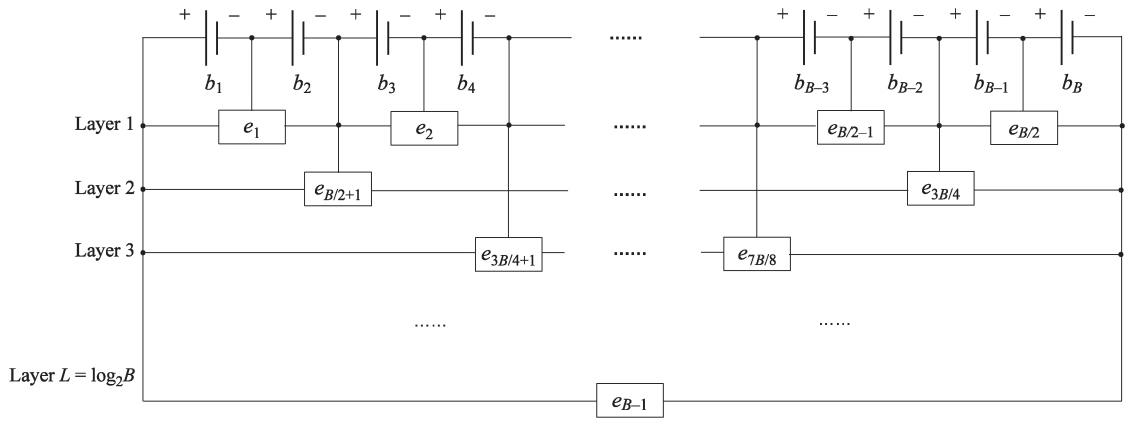

Fig. 2. Layer-based battery charge equalization system.

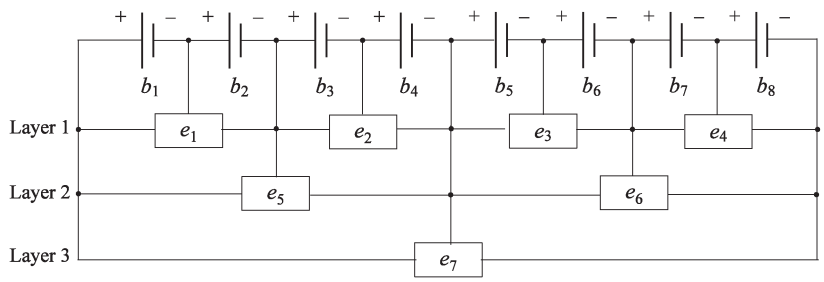

Fig. 3. Layer-based battery equalization system with $B = 8$.

$(B-1)(B+2)/2$ BGs and identify the BNBG(s). Moreover, it turns out that this procedure can be further simplified due to the following property.

Theorem 2: Consider a battery equalization system defined by assumptions i)–v). Among all BNBGs of the system, there exists at least one boundary BG with no more than $\lfloor B/2 \rfloor$ batteries.

Therefore, based on Theorem 2, the equalization time of the system can be calculated as

$$T_e^{\text{series}} = \max_{g \in \{1,\ldots,\lfloor B/2 \rfloor\}, i \in \{1, B-g+1\}} t_{\text{ideal}}(g,i). \tag{29}$$

In other words, the number of BGs to evaluate is reduced from $(B-1)(B+2)/2$ to B. This reduction may be significant considering that B is usually large in practice. Finally, the small amount of calculation required by this method would also allow embedding the procedure into the BMS for potential active control of the equalization process in the future.

III. Layer-Based Equalization Structure

A. Model

1) Descriptive Model: The series-based equalization structure is widely used in practice. However, this structure may be inefficient and have long equalization time under certain initial battery charge combinations. To improve the equalization process, a layer-based battery equalization structure is developed in [17]. The block diagram of such equalization system is given in Fig. 2. To carry out the analysis of this equalization structure, we assume that the system operates under assumptions i)–iii) and v) in Section II-A and the following.

vi) The equalizers are arranged in $L = \log_2 B$ layers. In layer l, $l \in \{1, 2, \ldots, L\}$, there are $B/2^l$ equalizers. Assume that all equalizers in layer l have identical equalization rate r_l.

vii) Under the layer-based structure, the jth equalizer in layer l is used to equalize the charge between BGs $BG(2^{l-1}, 1+(j-1)2^l)$ and $BG(2^{l-1}, 1+(2j-1)2^{l-1})$: If BG $BG(2^{l-1}, 1+(j-1)2^l)$ has a larger total SOC than $BG(2^{l-1}, 1+(2j-1)2^{l-1})$ at the beginning of a time slot, then the equalizer takes $r_l/2^{l-1}$ units of charge from each battery in $BG(2^{l-1}, 1+(j-1)2^l)$ and sends $r_l/2^{l-1}$ to each battery in $BG(2^{l-1}, 1+(2j-1)2^{l-1})$ during the time slot; if $BG(2^{l-1}, 1+(j-1)2^l)$ has a lower total SOC, then the equalizer makes the opposite transfer; if $BG(2^l, 1+(j-1)2^l)$ and $BG(2^{l-1}, 1+(2j-1)2^{l-1})$ have the same SOC, no transfer takes place between the two BGs during this time slot.

In the series-based equalization structure considered in Section II, each battery is affected by either one (if it is on the boundary) or two equalizers (otherwise). In the layer-based structure, each battery is affected by a total of L equalizers, i.e., one equalizer in each layer. In addition, due to assumption vii) that the energy transferred by an equalizer is evenly distributed among all batteries involved, the equalizers in the layer-based structure operate rather "independently." For instance, consider the eight-battery layer-based equalization system shown in Fig. 3. In this system, equalizer e_1 operates to eliminate the difference in SOC between b_1 and b_2, whereas e_5 balances the total charges between BGs $BG(2,1)$ and $BG(2,3)$ and e_7

Authorized licensed use limited to: MINCYT. Downloaded on August 23,2024 at 16:54:30 UTC from IEEE Xplore. Restrictions apply.

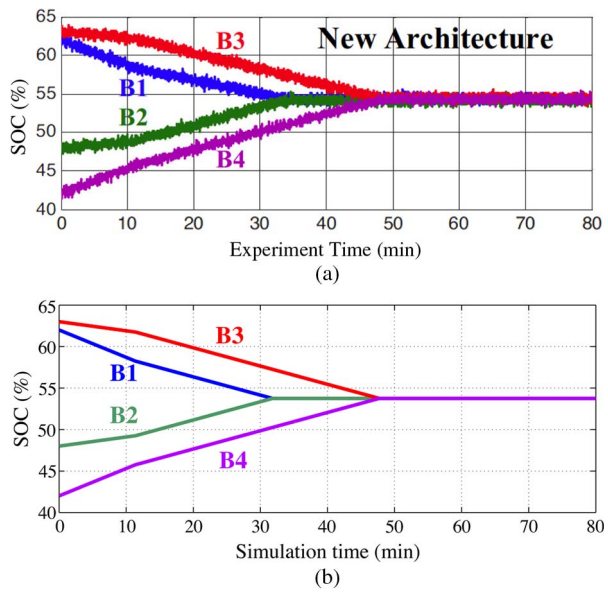

Fig. 4. Comparing the mathematical model with the actual physical system for a layer-based battery charge equalization system. (a) Actual experimental result [17]. (b) Simulation of the mathematical model.

balances the total charges between BGs $BG(4,1)$ and $BG(4,5)$. Under the layer structure, the equalization process of e_1 will not be accelerated or slowed down by other equalizers (e.g., e_5 and e_7) in the system, since those equalizers can only increase or decrease the SOCs of both b_1 and b_2 simultaneously by the same amount.

2) Mathematical Model: Let $x_i(n)$, again, denote the SOC of battery b_i at the end of time slot n, $i = 1, \ldots, B$, $n = 0, 1, \ldots$. Then, the evolution of the system is given by

$$x_i(n+1) = x_i(n) + \sum_{l=1}^{L} \sum_{j=1}^{B/2^l} \Big(\mathrm{sgn}(\Delta_{l,j}(n)) \cdot \left[I_{\mathbf{S}^+_{l,j}}(i) - I_{\mathbf{S}^-_{l,j}}(i) \right] \cdot \frac{r_l}{2^{l-1}} \Big) \quad i = 1, \ldots, B \tag{30}$$

where the signum function $\mathrm{sgn}(\cdot)$ and the indicator function $I_{\mathbf{A}}(\cdot)$ are defined in (5) and (22), respectively, and

$$\Delta_{l,j}(n) = \sum_{m \in \mathbf{S}^-_{l,j}} x_m(n) - \sum_{m \in \mathbf{S}^+_{l,j}} x_m(n) \tag{31}$$

$$\mathbf{S}^+_{l,j} = \left\{ (j-1)2^l + 1, (j-1)2^l + 2, \ldots (j-1)2^l + 2^{l-1} \right\} \tag{32}$$

$$\mathbf{S}^-_{l,j} = \left\{ (2j-1)2^{l-1} + 1, (2j-1)2^{l-1} + 2, \ldots (2j-1)2^{l-1} + 2^{l-1} \right\}. \tag{33}$$

In this formulation, $\mathbf{S}^+_{l,j}$ and $\mathbf{S}^-_{l,j}$ represent the indexes of batteries in the two BGs balanced by the jth equalizer in the lth layer, whereas $\Delta_{l,j}(n)$ is the difference of the total SOCs between these two BGs.

An illustration of the mathematical model for a four-battery pack is given in Fig. 4. The initial SOCs of these batteries are $x_1(0) = 0.62$, $x_2(0) = 0.48$, $x_3(0) = 0.63$, and $x_4(0) = 0.42$. Fig. 4(a) shows the experimental results obtained in [17] for the system under layer-based equalization, whereas Fig. 4(b) provides the system evolution obtained based on iterative calculations of (30).

B. Performance Evaluation

To calculate the equalization time of a layer-based equalization system defined by assumptions i)–iii) and v)–vii), consider the continuous-time version of the system model (30)–(33)

$$\dot{x}_i(t) = \sum_{l=1}^{L} \sum_{j=1}^{B/2^l} \left(\mathrm{sgn}(\Delta_{l,j}(n)) \cdot \left[I_{\mathbf{S}^+_{l,j}}(i) - I_{\mathbf{S}^-_{l,j}}(i) \right] \cdot \frac{\widetilde{r}_l}{2^{l-1}} \right) \quad i = 1, \ldots, B \tag{34}$$

where

$$\widetilde{r}_l = \frac{r_l}{\tau}. \tag{35}$$

For equalizer e_k, $k = 1, \ldots, B-1$, introduce

$$l(k) = \left\lceil -\log_2 \left(1 - \frac{k}{B} \right) \right\rceil \tag{36}$$

$$j(k) = k - \left[1 - 2^{1-l(k)} \right] \cdot B. \tag{37}$$

Then, it can be shown that e_k is the $j(k)$th equalizer in layer $l(k)$ of the layer-based battery equalization system previously defined. In addition, since, as previously stated, the equalizers operate "independently" of each other under the layer-based structure, the time needed for e_k to balance the charge between the two BGs involved can be calculated as

$$t_{\mathrm{eq}}(k) = \frac{\left| \Delta_{l(k),j(k)}(0) \right|}{2\widetilde{r}_{l(k)}} \tag{38}$$

where $\Delta_{l,j}(0)$, $l(k)$, and $j(k)$ are defined in (31), (36), and (37), respectively.

Definition 3: Bottleneck equalizer (BNEQ): the equalizer with the longest equalization time.

Theorem 3: The equalization time of a battery charge system defined by (34) and (35) is equal to the equalization time of the BNEQ of the system, i.e.,

$$\widehat{T}_e^{\mathrm{layer}} = \max_{k \in \{1, \ldots, B-1\}} t_{\mathrm{eq}}(k). \tag{39}$$

Therefore, for $r_l \ll 1$, the equalization time of a layer-based equalization system defined by assumptions i)–iii) and v)–vii) can be approximated using Theorem 3. Thus

$$T_e^{\mathrm{layer}} \approx \widehat{T}_e^{\mathrm{layer}}. \tag{40}$$

IV. Module-Based Equalization Structure

A. Model

1) Descriptive Model: To improve the performance of a battery equalization system, another structure is proposed and

Authorized licensed use limited to: MINCYT. Downloaded on August 23,2024 at 16:54:30 UTC from IEEE Xplore. Restrictions apply.

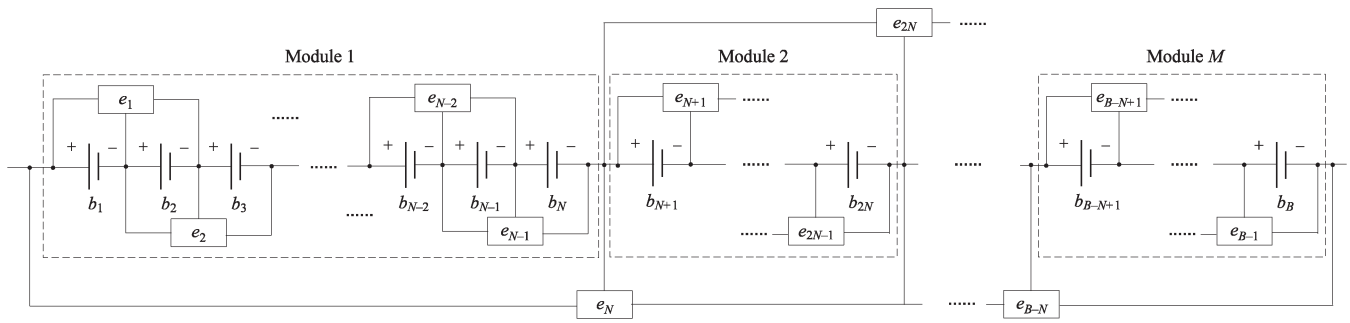

Fig. 5. Module-based battery charge equalization system.

studied in [14], [19], and [20]. In this structure, the entire battery string is divided into several "modules," each having the same number of battery cells. Within each module, equalizers are deployed based on the conventional series equalization structure. These equalizers are referred to as the *cell-level equalizers*. Then, each module is viewed as a "virtual" battery, and a group of equalizers is connected to these modules based, again, on the series structure. These equalizers are referred to as the *module-level equalizers*. The block diagram of such an equalization system is shown in Fig. 5. To carry out the analysis of this equalization structure, we assume that the system operates under assumptions i)–iii) and v) in Section II-A and the following.

viii) The battery string is divided into M modules, each with N individual batteries. Clearly, $MN = B$.

ix) The equalizers are divided into two groups: cell-level equalizers, $\mathbf{S}_C = \{jN + k | j = 0, \ldots, M-1; k = 1, \ldots, N-1\}$, and module-level equalizers, $\mathbf{S}_M = \{N, 2N, \ldots, (M-1)N\}$. All cell-level equalizers have identical equalization rate r_c, and all module-level equalizers have identical equalization rate r_m.

x) For a cell-level equalizer e_i, $i \in \mathbf{S}_C$, if battery b_i has a larger SOC than b_{i+1} at the beginning of a time slot, then e_i transfers r_c units of charge from b_i to b_{i+1} during the time slot; if b_i has a lower SOC, then e_i makes the opposite transfer; if b_i and b_{i+1} have the same SOC, no transfer takes place between the two batteries during this time slot.

xi) For a module-level equalizer e_i, $i \in \mathbf{S}_M$, if BG $BG(N, i-N+1)$ has a larger total SOC than $BG(N, i+1)$ at the beginning of a time slot, then the equalizer takes r_m/N units of charge from each battery in $BG(N, i-N+1)$ and sends r_m/N to each battery in $BG(N, i+1)$ during the time slot; if $BG(N, i-N+1)$ has a lower total SOC, then the equalizer makes the opposite transfer; if $BG(N, i-N+1)$ and $BG(N, i+1)$ have the same SOC, no transfer takes place between the two BGs during this time slot.

Under this model framework, the equalization within a module is "independent" with all other modules since the module-level equalizers modify the state of all batteries in a given module with the same amount.

2) Mathematical Model: Let $x_i(n)$, again, denote the SOC of battery b_i at the end of time slot n, $i = 1, \ldots, B$, $n = 0, 1, \ldots$. Then, the evolution of the system is given by

$$x_i(n+1) = x_i(n) + \sum_{j=1}^{B-1} \left(\operatorname{sgn}(\Delta_j(n)) \cdot \left[I_{\mathbf{S}_j^+}(i) - I_{\mathbf{S}_j^-}(i) \right] \cdot \frac{r_c I_{\mathbf{S}_C}(j) + r_m I_{\mathbf{S}_M}(j)}{1 + (N-1) \cdot I_{\mathbf{S}_M}(j)} \right) \quad i = 1, \ldots, B \tag{41}$$

where the signum function $\operatorname{sgn}(\cdot)$ and the indicator function $I_{\mathbf{A}}(\cdot)$ are defined in (5) and (22), respectively, and

$$\Delta_j(n) = \sum_{m \in \mathbf{S}_j^-} x_m(n) - \sum_{m \in \mathbf{S}_j^+} x_m(n) \tag{42}$$

$$\mathbf{S}_j^+ = \begin{cases} \{j-N+1, j-N+2, \ldots, j\}, & \text{if } j \in \mathbf{S}_M \\ \{j\}, & \text{if } j \in \mathbf{S}_C \end{cases} \tag{43}$$

$$\mathbf{S}_j^- = \begin{cases} \{j+1, j+2, \ldots, j+N\}, & \text{if } j \in \mathbf{S}_M \\ \{j+1\}, & \text{if } j \in \mathbf{S}_C \end{cases} \tag{44}$$

$$\mathbf{S}_C = \{jN + k | j = 0, \ldots, M-1; k = 1, \ldots, N-1\} \tag{45}$$

$$\mathbf{S}_M = \{N, 2N, \ldots, (M-1)N\}. \tag{46}$$

B. Performance Evaluation

Since the equalization within a module is not affected by other modules, and since the intermodule equalization is independent of the intramodule equalization, the equalization time of the overall system can be calculated using the following algorithm.

Algorithm 4.1

Step 1: Consider each module as an isolated battery system with series-based equalization.

Step 2: Identify the BNBG of each isolated battery system considered in Step 1 and calculate its ideal equalization time. This equalization time is referred to as the *intramodule equalization time* of each module and denoted as $\widehat{T}_{e,i}^{\text{intra}}$, $i = 1, \ldots, M$.

Step 3: For each module, aggregate all batteries in this module into one single virtual battery, and let the initial state of the aggregated battery be equal to

Authorized licensed use limited to: MINCYT. Downloaded on August 23,2024 at 16:54:30 UTC from IEEE Xplore. Restrictions apply.

the sum of SOCs of all individual batteries in the module. This results in a new battery system with M aggregated batteries. Identify the BNBG of this M-battery system and calculate its ideal equalization time. This equalization time is the *intermodule equalization time* and denoted as $\widehat{T}_e^{\text{inter}}$.

Step 4: The equalization time of the original system is estimated as the maximum of the intermodule equalization time and the longest intramodule equalization time, i.e.,

$$\widehat{T}_e^{\text{module}} = \max\left\{\widehat{T}_e^{\text{inter}}, \max_{i=1,\ldots,M} \widehat{T}_{e,i}^{\text{intra}}\right\}. \tag{47}$$

Moreover, the number of time slots until equalization is approximated as

$$\widehat{N}_e^{\text{module}} = \frac{\widehat{T}_e^{\text{module}}}{\tau} = \max\left\{\frac{\widehat{T}_e^{\text{inter}}}{\tau}, \max_{i=1,\ldots,M} \frac{\widehat{T}_{e,i}^{\text{intra}}}{\tau}\right\}. \tag{48}$$

Similar to the case of series-based equalization, it can be shown that the calculation of $\widehat{N}_e^{\text{module}}$ is, in fact, independent of τ.

Proposition 2: The equalization time of a battery equalization system defined by (41)–(46) can be approximated using Algorithm 4.1 as follows:

$$T_e^{\text{module}} \approx \widehat{T}_e^{\text{module}}. \tag{49}$$

Justification: The accuracy of Proposition 2 is justified using a similar numerical approach used in the justification of Proposition 1. Specifically, a C++ program is developed to calculate the state evolution of the module-based battery equalization system using mathematical equations (41)–(46). Using this program, the equalization time of the system, i.e., N_e^{module}, can be obtained. Then, N_e^{module} is compared with the equalization time obtained using Algorithm 4.1, i.e., $\widehat{N}_e^{\text{module}}$. To carry out the experiments, we selected $B \in \{4, 8, 16, 32, 64\}$ and $r = 0.00001$. For each B, we selected $M \in \{2, 4, \ldots, B/2\}$. Then, for each combination of B and M, a total of 50 000 different formations of initial battery charge are generated with $x_i(0)$'s selected randomly and independently according to uniform distribution $U(0, 1)$. For each initial buffer charge formation, we calculate its corresponding N_e^{module} and $\widehat{N}_e^{\text{module}}$ and evaluate their relative error based on

$$\begin{aligned}\epsilon_m &= \frac{\left|T_e^{\text{module}} - \widehat{T}_e^{\text{module}}\right|}{T_e^{\text{module}}} \cdot 100\% \\ &= \frac{\left|N_e^{\text{module}} - \widehat{N}_e^{\text{module}}\right|}{N_e^{\text{module}}} \cdot 100\%.\end{aligned} \tag{50}$$

The average values of ϵ_m for various combinations of B and M are summarized in Table II. The errors observed are mainly due to the limit cycle convergence observed in the discrete-time system. Other than that, we claim that Proposition 2 holds. ■

TABLE II
ACCURACY OF PROPOSITION 2: AVERAGE ESTIMATION ERROR ϵ_m FOR VARIOUS B AND M

$B = 4,\ M = 2$	$B = 8,\ M = 2$	$B = 8,\ M = 4$
0.0010%	0.0027%	0.0022%
$B = 16,\ M = 2$	$B = 16,\ M = 4$	$B = 16,\ M = 8$
0.0079%	0.0037%	0.0074%
$B = 32,\ M = 2$	$B = 32,\ M = 4$	$B = 32,\ M = 8$
0.0215%	0.0077%	0.0075%
$B = 32,\ M = 16$	$B = 64,\ M = 2$	$B = 64,\ M = 4$
0.0211%	0.0583%	0.0174%
$B = 64,\ M = 8$	$B = 64,\ M = 16$	$B = 64,\ M = 32$
0.0106%	0.0177%	0.0581%

TABLE III
COMPARING THE AVERAGE EQUALIZATION TIMES OF THE THREE EQUALIZATION STRUCTURES

	Average equalization times (time slots)		
B	Series-based	Layer-based	Module-based
4	33662	32191	32191 ($M = 2$)
8	54839	48226	49670 ($M = 4$)
16	84543	68729	72283 ($M = 4$)
32	126502	97422	104932 ($M = 4$)
64	184786	137489	151237 ($M = 4$)

TABLE IV
COMPARING THE STANDARD DEVIATION OF EQUALIZATION TIMES OF THE THREE EQUALIZATION STRUCTURES

	Standard deviation of equalization time (time slots)		
B	Series-based	Layer-based	Module-based
4	14075	13167	13167 ($M = 2$)
8	19790	17005	16662 ($M = 4$)
16	28908	24309	25708 ($M = 4$)
32	41723	34924	35358 ($M = 4$)
64	59276	49468	48591 ($M = 4$)

V. COMPARISONS

A. Statistical Comparison

In the current literature (see, for instance, [14]–[20]), the efficacy of a newly developed equalization system is often tested by only one or two specific examples. Apparently, this approach ignores the random variation of initial battery states as well as the sensitivity of system performance with respect to initial battery states. Therefore, the resulting conclusions, strictly speaking, cannot be considered justified.

Here, a Monte Carlo statistical study is carried out to compare the three equalization structures previously discussed. Specifically, we selected B from $\{4, 8, 16, 32, 64\}$ and randomly generated 50 000 for each B with $x_i(0)$'s selected randomly and independently according to uniform distribution $U(0, 1)$. For the 250 000 cases, simulations of the mathematical models are carried out for all three equalization structures. For the module-based system, we enumerate all possible M's from $\{2, 4, \ldots, B/2\}$. In addition, we assume that all equalizers have the same equalization rate $r = 0.00001$. The results are summarized in Tables III and IV and Fig. 6. For the module-based structure, only the results from the best M for each B is given in the table. The sensitivity of the system equalization performance with respect to M will be studied in future work.

As one can see from Table III, the layer-based structure provides the best average performance among the three for all

Authorized licensed use limited to: MINCYT. Downloaded on August 23,2024 at 16:54:30 UTC from IEEE Xplore. Restrictions apply.

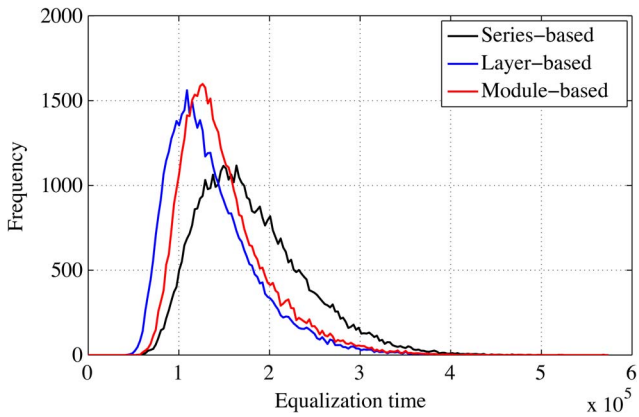

Fig. 6. Equalization time distributions for the three equalization structures based on 50 000 randomly generated cases ($B = 64$, $M = 4$).

TABLE V
PROPORTION OF CASES THAT THE LAYER- AND MODULE-BASED EQUALIZATION STRUCTURES OUTPERFORM THE SERIES-BASED STRUCTURE

B	Layer-based	Module-based
4 ($M = 2$)	49.55%	49.55%
8 ($M = 4$)	62.66%	49.81%
16 ($M = 4$)	76.98%	68.35%
32 ($M = 4$)	85.91%	79.47%
64 ($M = 4$)	90.79%	84.77%

B's considered, whereas the series-based structure appears to have the worst average performance. Specifically, the layer-based structure can reduce the average equalization time by about 25% for $B = 64$ from the series-based structure. The module-based structure, on the other hand, can reduce the average equalization time by about 18% for $B = 64$. It should be noted that, although the layer- and module-based structures can improve the average equalization performance over the traditional series-based structure, there are cases in which the series-based structure outperforms these two. The frequency of cases, where the layer- and module-based structures result in shorter equalization time than the series-based structure, is given in Table V. As one can see, for $B = 4$, although the average equalization times under the layer- and module-based structures are shorter than those under the series-based structure, improvement only occurs in about 50% of cases. However, as the number of batteries increases, the superiority of the layer- and module-based equalization structures becomes more and more prominent. For instance, when $B = 64$, the layer-based structure leads to a shorter equalization time than the series-based structure in about 90% of cases, whereas the module-based structure outperforms the series-based structure in nearly 85% of cases. Since the number of battery cells in real applications (e.g., electrical vehicles) is usually large, the layer-based or the module-based equalization structure should be considered over the traditional series-based structure for better equalization performance.

B. Illustrations

To further demonstrate the performance of these three structures, the following examples are given. In each example, three equalization structures are compared under the same initial conditions. To be fair, the equalization rate of all equalizers is $r = 0.0001$. In addition, for the module-based equalization system, we assume that each module contains two battery cells. The initial battery states are selected so that each of the three structures has the shortest equalization time in one example.

TABLE VI
INITIAL BATTERY STATE OF EXAMPLE 1

$x_1(0)$	$x_2(0)$	$x_3(0)$	$x_4(0)$
0.0006	0.9412	0.2586	0.1626
$x_5(0)$	$x_6(0)$	$x_7(0)$	$x_8(0)$
0.0561	0.4017	0.3747	0.0054

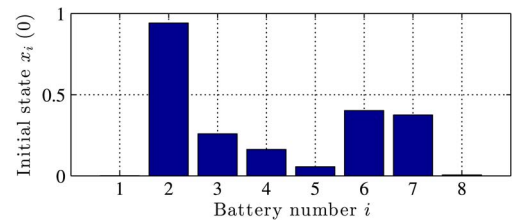

Fig. 7. Initial battery state of Example 1.

Example 1: Consider an eight-battery system with initial battery SOCs given in Table VI and shown in Fig. 7. The equalization processes of this battery system using series-, layer-, and module-based structures are provided in Fig. 8. As a result, the equalization time of the series-based structure is 3913 time slots, whereas both layer- and module-based structures need 4703 time slots for all batteries to balance.

In this example, batteries b_1 and b_2 form the BNBG, and the series-based structure allows for consistent transfer of charge to the rest of the battery system. Indeed, at the beginning of the equalization process, the two equalizers on both sides of battery b_2 transfer charge from b_2 to b_1, and b_3 simultaneously, leading to a fast drop in b_2's SOC. This eventually results in faster equalization compared with the other two structures, which reduce the charge from b_2 at a lower rate because the transfers are evenly distributed among both b_1 and b_3.

Example 2: Consider an eight-battery system with initial battery SOCs given in Table VII and shown in Fig. 9. The equalization processes of this battery system using series-, layer-, and module-based structures are provided in Fig. 10. As a result, the equalization time of the layer-based structure is 6115 time slots, whereas both series- and module-based structures need 7300 time slots for all batteries to balance.

In this example, batteries b_7 and b_8 form the BNBG in the series-based equalization structure. However, only one equalizer is responsible for transferring charge out of the BNBG in this structure. A similar issue also slows down the equalization process under the module-based structure. On the other hand, under the layer-based equalization structure, equalizers in all three layers can simultaneously work to reduce the charge in b_7 and b_8. As a result, the layer-based structure has the shortest equalization time among all three structures.

Example 3: Consider an eight-battery system with initial battery SOCs given in Table VIII and shown in Fig. 11. The equalization processes of this battery system using

Authorized licensed use limited to: MINCYT. Downloaded on August 23,2024 at 16:54:30 UTC from IEEE Xplore. Restrictions apply.

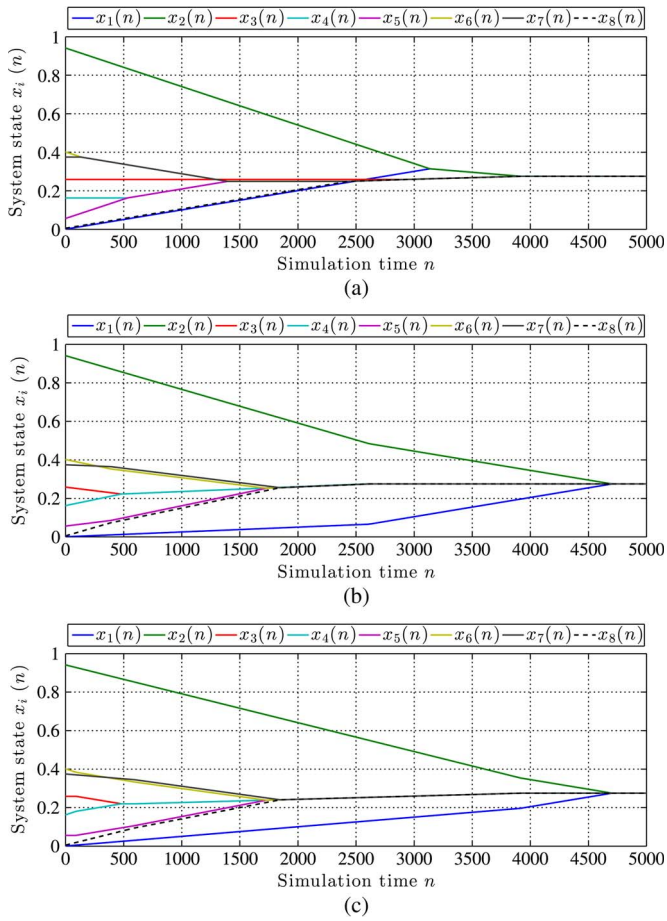

Fig. 8. Battery equalization processes under three structures: Example 1. (a) Series-based equalization. (b) Layer-based equalization. (c) Module-based equalization.

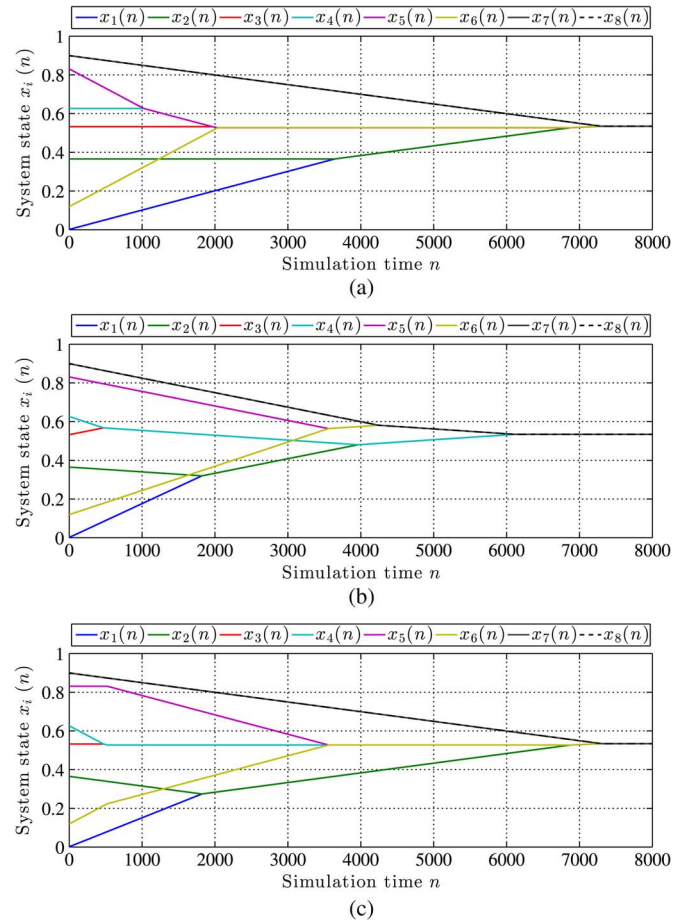

Fig. 10. Battery equalization processes under three structures: Example 2. (a) Series-based equalization. (b) Layer-based equalization. (c) Module-based equalization.

TABLE VII
INITIAL BATTERY STATE OF EXAMPLE 2

$x_1(0)$	$x_2(0)$	$x_3(0)$	$x_4(0)$
0.0014	0.3653	0.5324	0.6265
$x_5(0)$	$x_6(0)$	$x_7(0)$	$x_8(0)$
0.8308	0.1193	0.9027	0.8963

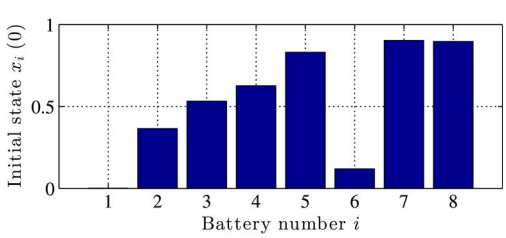

Fig. 9. Initial battery state of Example 2.

TABLE VIII
INITIAL BATTERY STATE OF EXAMPLE 3

$x_1(0)$	$x_2(0)$	$x_3(0)$	$x_4(0)$
0.0009	0.9132	0.8288	0.0317
$x_5(0)$	$x_6(0)$	$x_7(0)$	$x_8(0)$
0.0227	0.0641	0.2329	0.8997

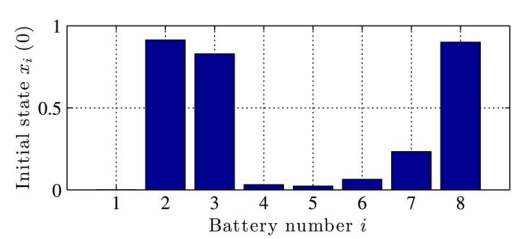

Fig. 11. Initial battery state of Example 3.

series-, layer-, and module-based structures are provided in Fig. 12. As a result, the equalization time of the module-based structure is 4562 time slots, whereas the series- and layer-based structures need 6200 and 5228 time slots, respectively, for all batteries to balance.

In this example, the BNBG of the series-based equalization structure is $b_1 - b_2 - b_3$, whereas another boundary BG formed by $b_7 - b_8$ also requires long equalization time. In the layer-based structure, both BGs can transfer charge faster to the middle due to the additional channels provided in different layers. In the module-based structure, the equalization time is further reduced compared with the layer-based structure. This can be attributed to the module-level equalizer, which balances the difference in total charge between $b_3 - b_4$ and $b_5 - b_6$. In the layer-based structure, however, this charge difference is balanced by the top-layer equalizer at a reduced rate, since this equalizer aims to balance two BGs with four batteries each: $b_1 - b_2 - b_3 - b_4$ and $b_5 - b_6 - b_7 - b_8$.

Authorized licensed use limited to: MINCYT. Downloaded on August 23,2024 at 16:54:30 UTC from IEEE Xplore. Restrictions apply.

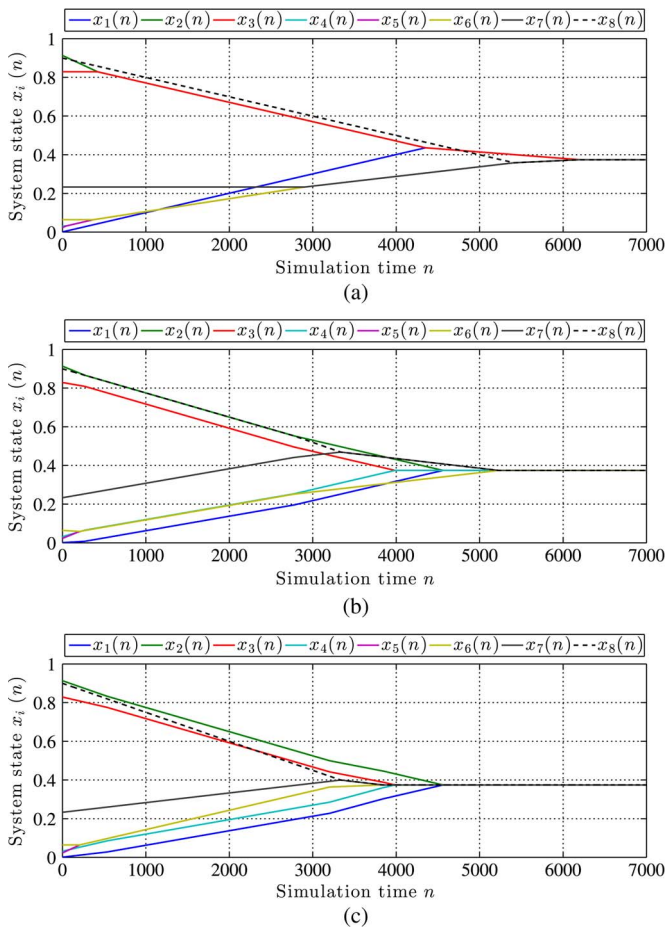

Fig. 12. Battery equalization processes under three structures: Example 3. (a) Series-based equalization. (b) Layer-based equalization. (c) Module-based equalization.

C. Other Considerations

It should be noted that, in addition to the equalization speed, other factors such as sizing, cost, and efficiency of an equalization system should also be considered in practical applications. For the three structures addressed in this paper, the sizing, cost, and efficiency are similar since the total semiconductor stress and utilization of discussed structures do not dramatically differ. Moreover, the sizing, cost, and efficiency of each structure may vary due to the controller, gate drivers, or different design and optimization approaches.

VI. Conclusion and Future Work

In this paper, we have studied the series-, layer-, and module-based battery equalization systems. Specifically, mathematical models are derived to describe the system-level dynamics of the equalization processes under the three equalization structures. To analyze the performance of these systems, definitions of BNBG and BNEQ are proposed. Then, based on these notions, analytical algorithms are developed to calculate the equalization time of the systems under consideration. Finally, a Monte Carlo statistical analysis is used to compare the effectiveness of the three equalization structures. As a result, both layer- and module-based structures result in shorter equalization time on average. The superiority of the two structures becomes more significant for systems with a large number of batteries.

Future work in this direction includes:

- investigation of the system-theoretic properties of the equalization time with respect to system parameters;
- investigation of feedback control of battery equalization;
- extension of the study to systems with energy losses;
- extension of the study to systems with nonidentical equalizers;
- generalization of the study to systems with external power source and/or with load;
- generalization of the study to systems with other equalizer structures.

Appendix A
Proof of Theorem 1

Theorem 1: For $B \in \{2, 3\}$, the equalization time of a battery charge system defined by (12)–(15) can be calculated as follows:

$$\widetilde{T}_e^{\text{series}}(B=2) = \frac{|y_1(0)|}{\widetilde{r}} = \frac{|y_2(0)|}{\widetilde{r}} \tag{A.51}$$

$$\widetilde{T}_e^{\text{series}}(B=3) = \max\left\{\frac{|y_1(0)|}{\widetilde{r}}, \frac{|y_3(0)|}{\widetilde{r}}\right\}. \tag{A.52}$$

Proof: For $B = 2$, (A.51) can be immediately obtained through the mathematical model. In the following, we give the proof for $B = 3$. Without loss of generality, the following three cases are studied.

$$\begin{aligned} &\text{Case 1}: \quad y_1(0) > y_3(0) > 0 > y_2(0).\\ &\text{Case 2}: \quad y_1(0) > y_2(0) > 0 > y_3(0).\\ &\text{Case 3}: \quad y_2(0) > y_1(0) > 0 > y_3(0). \end{aligned}$$

Since the system is symmetric, it can be shown that any buffer charge formation can be transformed to one of the three cases previously given. Next, we derive the formula for calculating the equalization time for each case.

Case 1: $y_1(0) > y_3(0) > 0 > y_2(0)$. Based on (15), we have $y_2(0) = -[y_1(0) + y_3(0)]$.

The equalization process of the three-battery system under this initial formation can be divided into two phases. During the first phase, both b_1 and b_3 discharge with rate $\widetilde{r}$, whereas b_2 is charged with rate $2\widetilde{r}$. This phase ends when b_2 and b_3 contain the same charge for the first time. The duration of this phase is

$$T_1 = \frac{y_1(0) + 2y_3(0)}{3\widetilde{r}}.$$

At the end of this phase, we have

$$y_1(T_1) = \frac{2\left[y_1(0) - y_3(0)\right]}{3}, \quad y_2(T_1) = \frac{y_3(0) - y_1(0)}{3}$$

$$y_3(T_1) = \frac{y_3(0) - y_1(0)}{3}.$$

Next, battery b_1 continues to discharge with rate $\widetilde{r}$, whereas b_2 and b_3 are both being charged but with rate $\widetilde{r}/2$ until

Authorized licensed use limited to: MINCYT. Downloaded on August 23,2024 at 16:54:30 UTC from IEEE Xplore. Restrictions apply.

$y_1(t) = y_2(t) = y_3(t) = 0$. The duration of this phase is

$$T_2 = \frac{|y_1(T_1)|}{\widetilde{r}} = \frac{2\,[y_1(0) - y_3(0)]}{3\widetilde{r}}.$$

Therefore, the equalization time T_e can be calculated as

$$T_e^{\text{series}} = T_1 + T_2 = \frac{y_1(0)}{\widetilde{r}}.$$

Case 2: $y_1(0) > y_2(0) > 0 > y_3(0)$. Based on (15), we have $y_3(0) = -[y_1(0) + y_2(0)]$.

Using a similar approach as above, we can divide the equalization process under this initial formation into two phases. During the first phase, b_1 transfers energy to b_2 with rate $\widetilde{r}$, whereas b_2 transfers energy to b_3 with the same rate. As a result, the state of b_2 remains constant during this period. This phase ends when b_1 and b_2 contain the same charge for the first time. The duration of this phase is

$$T_1 = \frac{y_1(0) - y_2(0)}{\widetilde{r}}.$$

At the end of this phase, we have

$$y_1(T_1) = y_2(0), \quad y_2(T_1) = y_2(0), \quad y_3(T_1) = -2y_2(0).$$

Next, battery b_3 continues to be charged with rate $\widetilde{r}$, whereas b_1 and b_2 are both being discharged but with rate $\widetilde{r}/2$ until $y_1(t) = y_2(t) = y_3(t) = 0$. The duration of this phase is

$$T_2 = \frac{|y_3(T_1)|}{\widetilde{r}} = \frac{2y_2(0)}{\widetilde{r}}.$$

Therefore, the equalization time T_e can be calculated as

$$T_e^{\text{series}} = T_1 + T_2 = \frac{y_1(0) + y_2(0)}{\widetilde{r}} = \frac{|y_3(0)|}{\widetilde{r}}.$$

Case 3: $y_2(0) > y_1(0) > 0 > y_3(0)$. Based on (15), we have $y_3(0) = -[y_1(0) + y_2(0)]$.

Using a similar approach as above, we can divide the equalization process under this initial formation into two phases. During the first phase, both b_1 and b_2 are charged by b_2 with rate $\widetilde{r}$, whereas b_2 discharges with rate $\widetilde{r}$. This phase ends when b_1 and b_2 contain the same charge for the first time. The duration of this phase is

$$T_1 = \frac{y_2(0) - y_1(0)}{3\widetilde{r}}.$$

At the end of this phase, we have

$$y_1(T_1) = \frac{2y_1(0) + y_2(0)}{3}, \quad y_2(T_1) = \frac{2y_1(0) + y_2(0)}{3},$$
$$y_3(T_1) = -\frac{4y_1(0) + 2y_2(0)}{3}.$$

Next, battery b_3 continues to be charged with rate $\widetilde{r}$, whereas b_1 and b_2 are both being discharged but with rate $\widetilde{r}/2$ until $y_1(t) = y_2(t) = y_3(t) = 0$. The duration of this phase is

$$T_2 = \frac{|y_3(T_1)|}{\widetilde{r}} = \frac{4y_1(0) + 2y_2(0)}{3\widetilde{r}}.$$

Therefore, the equalization time T_e can be calculated as

$$T_e^{\text{series}} = T_1 + T_2 = \frac{y_1(0) + y_2(0)}{\widetilde{r}} = \frac{|y_3(0)|}{\widetilde{r}}.$$

Appendix B
Proof of Theorem 2

Theorem 2: Consider a battery equalization system defined by assumptions i)–v). Among all BNBGs of the system, there exists at least one boundary BG with no more than $\lfloor B/2 \rfloor$ batteries.

Proof: The proof of this theorem is carried out in two steps: 1) We show that there exists at least one boundary BG being the BNBG; and 2) among all boundary BNBGs, there exists at least one with no more than $\lfloor B/2 \rfloor$ batteries.

Step 1: By contradiction, first assume that all BNBGs are internal BGs. Without loss of generality, let $BG(g_0, i_0)$ denote an internal BG (with a total of g_0 batteries starting with battery b_{i_0}), which is a BNBG. Then, along with this group, consider two boundary BGs surrounding it: $BG(i_0 - 1, 1)$ and $BG(B - i_0 - g_0 + 1, i_0 + g_0)$. Clearly, these three BGs form a partition into the entire system, and

$$g_0 > i_0, \quad g_0 > B - i_0 - g_0 + 1.$$

The ideal equalization time of these BGs is given by

$$t_{\text{ideal}}(i_0 - 1, 1) = \frac{\left|\sum_{j=1}^{i_0-1} y_j(0)\right|}{r}$$
$$t_{\text{ideal}}(g_0, i_0) = \frac{\left|\sum_{j=i_0}^{i_0+g_0-1} y_j(0)\right|}{2r}$$
$$t_{\text{ideal}}(B - i_0 - g_0 + 1, i_0 + g_0) = \frac{\left|\sum_{j=i_0+g_0}^{B} y_j(0)\right|}{r}.$$

Since

$$\left|\sum_{j=1}^{i_0-1} y_j(0) + \sum_{j=i_0+g_0}^{B} y_j(0)\right| = \left|\sum_{j=i_0}^{i_0+g_0-1} y_j(0)\right|$$

we have

$$\begin{aligned} t_{\text{ideal}}(g_0, i_0) &= \frac{\left|\sum_{j=i_0}^{i_0+g_0-1} y_j(0)\right|}{2r} \\ &= \frac{\left|\sum_{j=1}^{i_0-1} y_j(0) + \sum_{j=i_0+g_0}^{B} y_j(0)\right|}{2r} \\ &\le \frac{\left|\sum_{j=1}^{i_0-1} y_j(0)\right| + \left|\sum_{j=i_0+g_0}^{B} y_j(0)\right|}{2r} \\ &\le \max\{t_{\text{ideal}}(i_0 - 1, 1), \\ &\qquad t_{\text{ideal}}(B - i_0 - g_0 + 1, i_0 + g_0)\}. \end{aligned}$$

Therefore, either $BG(i_0 - 1, 1)$ or $BG(B - i_0 - g_0 + 1, i_0 + g_0)$ is the BNBG, which contradicts the assumption. In other words, there exists at least one boundary BG being the BNBG.

Step 2: Next, assume that among all boundary BNBGs, the one with the smallest number of batteries is $BG(g_1, i_1)$ with $g_1 > \lfloor B/2 \rfloor$. Without loss of generality, assume that $i_1 = 1$. Then, the ideal equalization time of the BG is given by

$$t_{\text{ideal}}(g_1, i_1) = \frac{\left|\sum_{j=1}^{g_1} y_j(0)\right|}{r}.$$

Authorized licensed use limited to: MINCYT. Downloaded on August 23,2024 at 16:54:30 UTC from IEEE Xplore. Restrictions apply.

In addition, the ideal equalization time of BG $BG(g_1+1, B-g_1)$ is given by

$$t_{\text{ideal}}(B-g_1, g_1+1) = \frac{\left|\sum_{j=g_1+1}^{B} y_j(0)\right|}{r} = \frac{\left|\sum_{j=1}^{g_1} y_j(0)\right|}{r} = t_{\text{ideal}}(g_1, i_1).$$

Therefore, $BG(B-g_1, g_1+1)$ is also a BNBG. Since $g_1 > \lfloor B/2 \rfloor$, we have $B-g_1 < \lfloor B/2 \rfloor$. In other words, a BNBG with fewer that $\lfloor B/2 \rfloor$ batteries exist, which is a contradiction.

APPENDIX C
PROOF OF THEOREM 3

Theorem 3: The equalization time of a battery charge system defined by (34) and (35) is equal to the equalization time of the BNEQ of the system, i.e.,

$$\widehat{T}_e^{\text{layer}} = \max_{k\in\{1,\ldots,B-1\}} t_{\text{eq}}(k). \tag{A.53}$$

Proof: Follows immediately from the independent operation of equalizers in the layer-based structure.

REFERENCES

[1] A. Khaligh and Z. Li, "Battery, ultracapacitor, fuel cell, hybrid energy storage systems for electric, hybrid electric, fuel cell, plug-in hybrid electric vehicles: State of the art," *IEEE Trans. Veh. Technol.*, vol. 59, no. 6, pp. 2806–2814, Jul. 2010.

[2] J. Cao and A. Emadi, "A new battery/ultracapacitor hybrid energy storage system for electric, hybrid, plug-in hybrid electric vehicles," *IEEE Trans. Power Electron.*, vol. 27, no. 1, pp. 122–132, Jan. 2012.

[3] W. F. Bentley, "Cell balancing considerations for lithium-ion battery systems," in *Proc. Battery Conf. Appl. Adv.*, 1997, pp. 223–226.

[4] J. Cao, N. Schofield, and A. Emadi, "Battery balancing methods: A comprehensive review," in *Proc. IEEE Veh. Power Propulsion Conf.*, 2008, pp. 1–6.

[5] J. Gallardo-Lozano, E. Romero-Cadaval, M. I. Milanes-Montero, and M. A. Guerrero-Martinez, "Battery equalization active methods," *J. Power Sources*, vol. 246, pp. 934–949, Jan. 2014.

[6] B. Lindemark, "Individual Cell voltage Equalizers (ICE) for reliable battery performance," in *Proc. 13th Int. Telecommun. Energy Conf.*, 1991, pp. 196–201.

[7] G. Brainard, "Non-dissipative battery charger equalizer," U.S. Patent 5 479 083, Dec. 26, 1995.

[8] Y.-S. Lee and G.-T. Cheng, "Quasi-resonant zero-current-switching bidirectional converter for battery equalization applications," *IEEE Trans. Power Electron.*, vol. 21, no. 5, pp. 1213–1224, Sep. 2006.

[9] A. Xu, S. Xie, and X. Liu, "Dynamic voltage equalization for series-connected ultracapacitors in EV/HEV applications," *IEEE Trans. Veh. Technol.*, vol. 58, no. 8, pp. 3981–3987, Oct. 2009.

[10] J. Kimball and P. Krein, "Analysis and design of switched capacitor converters," in *Proc. IEEE Appl. Power Electron. Conf. Expo.*, 2005, vol. 3, pp. 1473–1477.

[11] A. Baughman and M. Ferdowsi, "Double-tiered switched-capacitor battery charge equalization technique," *IEEE Trans. Ind. Electron.*, vol. 55, no. 6, pp. 2277–2285, Jun. 2008.

[12] Y. Yuanmao, K. W. E. Cheng, and Y. P. B. Yeung, "Zero-current switching switched-capacitor zero-voltage-gap automatic equalization system for series battery string," *IEEE Trans. Power Electron.*, vol. 27, no. 7, pp. 3234–3242, Jul. 2012.

[13] N. Kutkut, H. Wiegman, D. Divan, and D. Novotny, "Design considerations for charge equalization of an electric vehicle battery system," *IEEE Trans. Ind. Appl.*, vol. 35, no. 1, pp. 28–35, Jan./Feb. 1999.

[14] C.-H. Kim, M.-Y. Kim, H.-S. Park, and G.-W. Moon, "A modularized two-stage charge equalizer with cell selection switches for series-connected lithium-ion battery string in an HEV," *IEEE Trans. Power Electron.*, vol. 27, no. 8, pp. 3764–3774, Aug. 2012.

[15] Y. Lee and M. Cheng, "Intelligent control battery equalization for series connected lithium-ion battery strings," *IEEE Trans. Ind. Electron.*, vol. 52, no. 5, pp. 1297–1307, Oct. 2005.

[16] P. Cassani and S. Williamson, "Feasibility analysis of a novel cell equalizer topology for plug-in hybrid electric vehicle energy-storage systems," *IEEE Trans. Veh. Technol.*, vol. 58, no. 8, pp. 3938–3946, Oct. 2009.

[17] B. Dong and Y. Han, "A new architecture for battery charge equalization," in *Proc. IEEE Energy Convers. Congr. Expo.*, 2011, pp. 928–934.

[18] H.-S. Park, C.-H. Kim, K.-B. Park, G.-W. Moon, and J.-H. Lee, "Design of a charge equalizer based on battery modularization," *IEEE Trans. Veh. Technol.*, vol. 58, no. 7, pp. 3216–3223, Sep. 2009.

[19] H.-S. Park, C.-E. Kim, C.-H. Kim, G.-W. Moon, and J.-H. Lee, "A modularized charge equalizer for an HEV lithium-ion battery string," *IEEE Trans. Ind. Electron.*, vol. 56, no. 5, pp. 1464–1476, May 2009.

[20] C.-H. Kim, M.-Y. Kim, and G.-W. Moon, "A modularized charge equalizer using a battery monitoring IC for series-connected li-ion battery strings in electric vehicles," *IEEE Trans. Power Electron.*, vol. 28, no. 8, pp. 3779–3787, Aug. 2013.

[21] C.-S. Moo, K. S. Ng, and Y.-C. Hsieh, "Parallel operation of battery power modules," *IEEE Trans. Energy Convers.*, vol. 23, no. 2, pp. 701–707, Jun. 2008.

[22] M. Daowd, N. Omar, P. Van den Bossche, and J. Van Mierlo, "Passive and active battery balancing comparison based on MATLAB simulation," in *Proc. IEEE VPPC*, 2011, pp. 1–7.

[23] F. Ju, J. Wang, J. Li, G. Xiao, and S. Biller, "Virtual battery: A battery simulation framework for electric vehicles," *IEEE Trans. Autom. Sci. Eng.*, vol. 10, no. 1, pp. 5–15, Jan. 2013.

Haoqi Chen received the B.A. degree in mathematics from St. Norbert College, De Pere, WI, USA, in 2012 and the M.S. degree in industrial engineering from the University of Wisconsin–Milwaukee, Milwaukee, WI, in 2014.

In the Fall of 2012, he joined Dr. L. Zhang's research team at the University of Wisconsin–Milwaukee and has since participated in the battery system equalization research project. His research interests include program simulation, system analysis, and operation research.

Liang Zhang (S'04–M'09) received the B.E. and M.E. degrees from the Center for Intelligent and Networked Systems, Department of Automation, Tsinghua University, Beijing, China, in 2002 and 2004, respectively, and the Ph.D. degree in electrical engineering and systems from the University of Michigan, Ann Arbor, MI, USA, in 2009.

He is currently an Assistant Professor with the Department of Electrical and Computer Engineering, University of Connecticut, Storrs, CT, USA. Before joining the University of Connecticut, he was with the Department of Industrial and Manufacturing Engineering, University of Wisconsin–Milwaukee, Milwaukee, WI, USA, from 2009 to 2013. His research interests include modeling, analysis, improvement, design, control, and energy-efficient operations of manufacturing and service systems, as well as modeling and analysis of battery equalization systems.

Yehui Han (S'04–M'10) received the B.S. and M.S. degrees from Tsinghua University, Beijing, China, in 2000 and 2003, respectively, and the Ph.D. degree from the Massachusetts Institute of Technology (MIT), Cambridge, MA, USA, in 2010, all in electrical engineering.

He is currently an Assistant Professor with the Department of Electrical and Computer Engineering, University of Wisconsin–Madison, Madison, WI, USA, and is affiliated with the Wisconsin Electric Machines and Power Electronics Consortium. His primary research interests include power electronics and their applications in renewable energy and energy efficiency.

Dr. Han received the MIT Landsman Fellowship and two IEEE Prize Paper Awards.

Authorized licensed use limited to: MINCYT. Downloaded on August 23,2024 at 16:54:30 UTC from IEEE Xplore. Restrictions apply.