PD - 97390

International
IOR Rectifier

IRLB8721PbF

HEXFET® Power MOSFET

Applications

- Optimized for UPS/Inverter Applications
- High Frequency Synchronous Buck Converters for Computer Processor Power
- High Frequency Isolated DC-DC Converters with Synchronous Rectification for Telecom and Industrial Use

Benefits

- Very Low RDS(on) at 4.5V V_{GS}
- Ultra-Low Gate Impedance
- Fully Characterized Avalanche Voltage and Current
- Lead-Free

V_{DSS}	$R_{DS(on)}$ max	Qg (typ.)
30V	8.7mΩ@V_{GS} = 10V	7.6nC

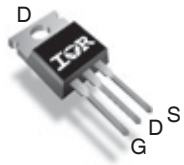

TO-220AB
IRLB8721PbF

G	D	S
Gate	Drain	Source

Absolute Maximum Ratings

	Parameter	Max.	Units
V_{DS}	Drain-to-Source Voltage	30	V
V_{GS}	Gate-to-Source Voltage	± 20	
I_D @ T_C = 25°C	Continuous Drain Current, V_{GS} @ 10V	62	A
I_D @ T_C = 100°C	Continuous Drain Current, V_{GS} @ 10V	44	
I_{DM}	Pulsed Drain Current ①	250	
P_D @T_C = 25°C	Maximum Power Dissipation ⑤	65	W
P_D @T_C = 100°C	Maximum Power Dissipation ⑤	33	
	Linear Derating Factor	0.43	W/°C
T_J T_{STG}	Operating Junction and Storage Temperature Range	-55 to + 175	°C
	Soldering Temperature, for 10 seconds	300 (1.6mm from case)	
	Mounting torque, 6-32 or M3 screw	10lb·in (1.1N·m)	

Thermal Resistance

	Parameter	Typ.	Max.	Units
$R_{\theta JC}$	Junction-to-Case ⑤	——	2.3	°C/W
$R_{\theta CS}$	Case-to-Sink, Flat Greased Surface	0.5	——	
$R_{\theta JA}$	Junction-to-Ambient ④	——	62	

Notes ① through ⑤ are on page 9

4/22/09

Static @ T_J = 25°C (unless otherwise specified)

	Parameter	Min.	Typ.	Max.	Units	Conditions
BV_{DSS}	Drain-to-Source Breakdown Voltage	30	—	—	V	V_{GS} = 0V, I_D = 250μA
$\Delta BV_{DSS}/\Delta T_J$	Breakdown Voltage Temp. Coefficient	—	21	—	mV/°C	Reference to 25°C, I_D = 1mA
$R_{DS(on)}$	Static Drain-to-Source On-Resistance	—	6.5	8.7	mΩ	V_{GS} = 10V, I_D = 31A ③
		—	13.1	16		V_{GS} = 4.5V, I_D = 25A ③
$V_{GS(th)}$	Gate Threshold Voltage	1.35	1.80	2.35	V	V_{DS} = V_{GS}, I_D = 25μA
$\Delta V_{GS(th)}/\Delta T_J$	Gate Threshold Voltage Coefficient	—	-7.0	—	mV/°C	
I_{DSS}	Drain-to-Source Leakage Current	—	—	1.0	μA	V_{DS} = 24V, V_{GS} = 0V
		—	—	150		V_{DS} = 24V, V_{GS} = 0V, T_J = 125°C
I_{GSS}	Gate-to-Source Forward Leakage	—	—	100	nA	V_{GS} = 20V
	Gate-to-Source Reverse Leakage	—	—	-100		V_{GS} = -20V
gfs	Forward Transconductance	35	—	—	S	V_{DS} = 15V, I_D = 25A
Q_g	Total Gate Charge	—	7.6	13		
Q_{gs1}	Pre-Vth Gate-to-Source Charge	—	1.9	—		V_{DS} = 15V
Q_{gs2}	Post-Vth Gate-to-Source Charge	—	1.2	—	nC	V_{GS} = 4.5V
Q_{gd}	Gate-to-Drain Charge	—	3.4	—		I_D = 25A
Q_{godr}	Gate Charge Overdrive	—	2.0	—		See Fig. 16
Q_{sw}	Switch Charge (Q_{gs2} + Q_{gd})	—	4.6	—		
Q_{oss}	Output Charge	—	7.9	—	nC	V_{DS} = 15V, V_{GS} = 0V
R_G	Gate Resistance	—	2.3	3.8	Ω	
$t_{d(on)}$	Turn-On Delay Time	—	9.1	—		V_{DD} = 15V, V_{GS} = 4.5V③
t_r	Rise Time	—	93	—		I_D = 25A
$t_{d(off)}$	Turn-Off Delay Time	—	9.0	—	ns	R_G = 1.8Ω
t_f	Fall Time	—	17	—		See Fig. 14
C_{iss}	Input Capacitance	—	1077	—		V_{GS} = 0V
C_{oss}	Output Capacitance	—	360	—	pF	V_{DS} = 15V
C_{rss}	Reverse Transfer Capacitance	—	110	—		f = 1.0MHz

Avalanche Characteristics

	Parameter	Typ.	Max.	Units
E_{AS}	Single Pulse Avalanche Energy②	—	98	mJ
I_{AR}	Avalanche Current ①	—	25	A

Diode Characteristics

	Parameter	Min.	Typ.	Max.	Units	Conditions
I_S	Continuous Source Current (Body Diode)	—	—	62	A	MOSFET symbol showing the integral reverse p-n junction diode. 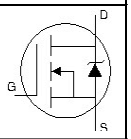
I_{SM}	Pulsed Source Current (Body Diode) ①	—	—	250		
V_{SD}	Diode Forward Voltage	—	—	1.0	V	T_J = 25°C, I_S = 25A, V_{GS} = 0V ③
t_{rr}	Reverse Recovery Time	—	16	24	ns	T_J = 25°C, I_F = 25A, V_{DD} = 15V
Q_{rr}	Reverse Recovery Charge	—	14	21	nC	di/dt = 200A/μs ③

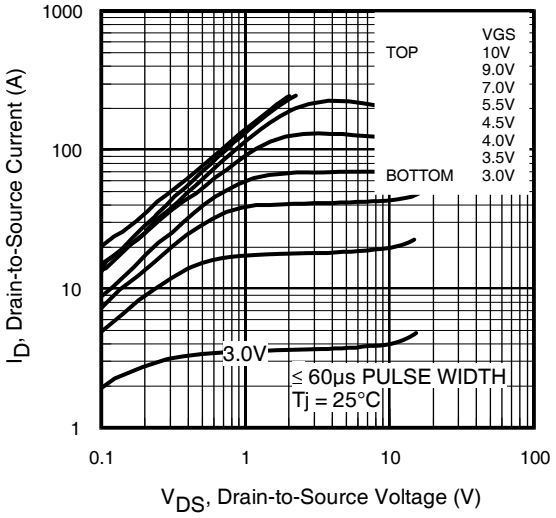

Fig 1. Typical Output Characteristics

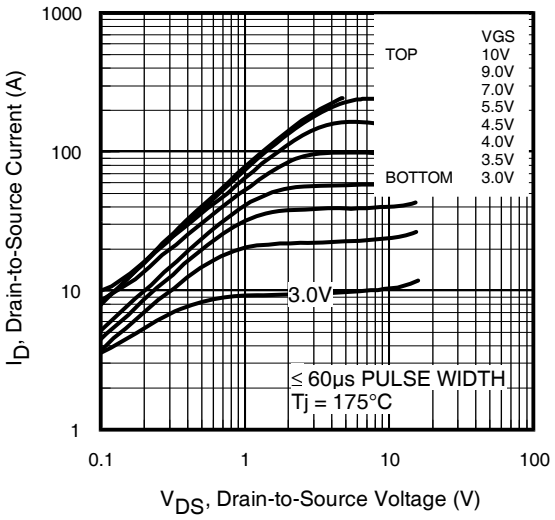

Fig 2. Typical Output Characteristics

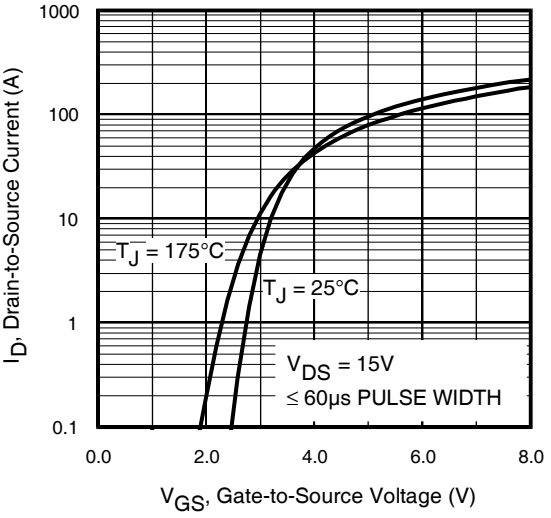

Fig 3. Typical Transfer Characteristics

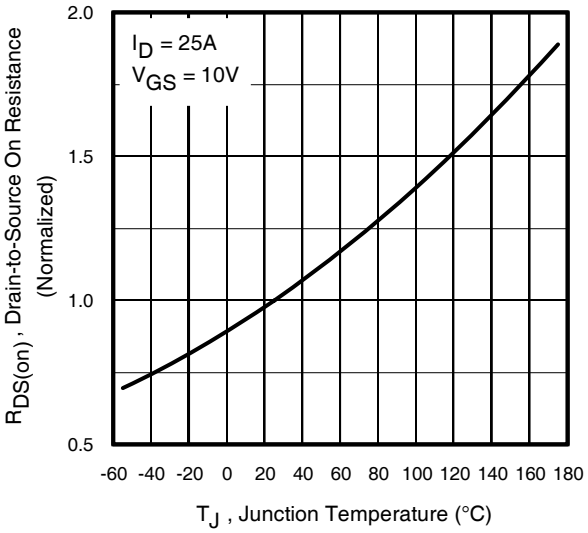

Fig 4. Normalized On-Resistance vs. Temperature

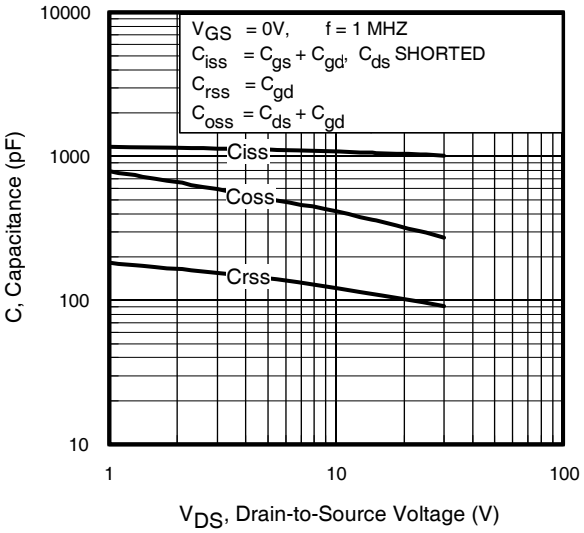

Fig 5. Typical Capacitance vs. Drain-to-Source Voltage

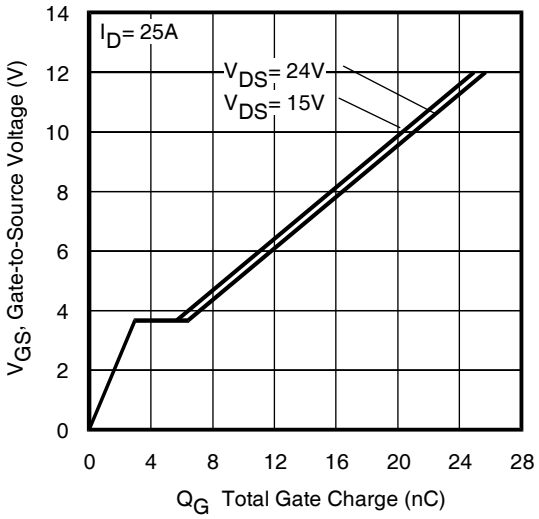

Fig 6. Typical Gate Charge vs. Gate-to-Source Voltage

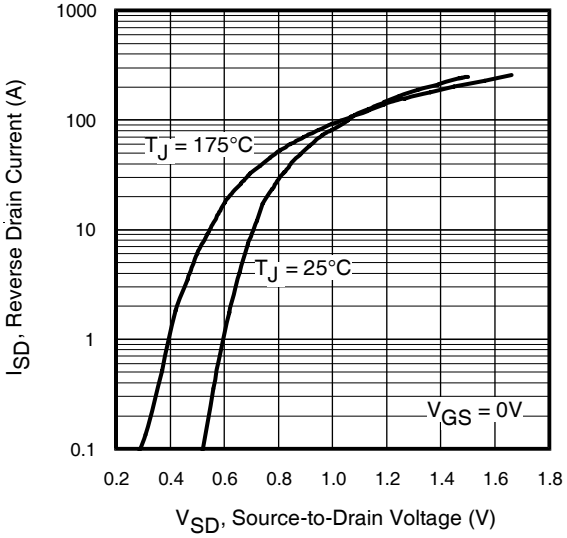

Fig 7. Typical Source-Drain Diode Forward Voltage

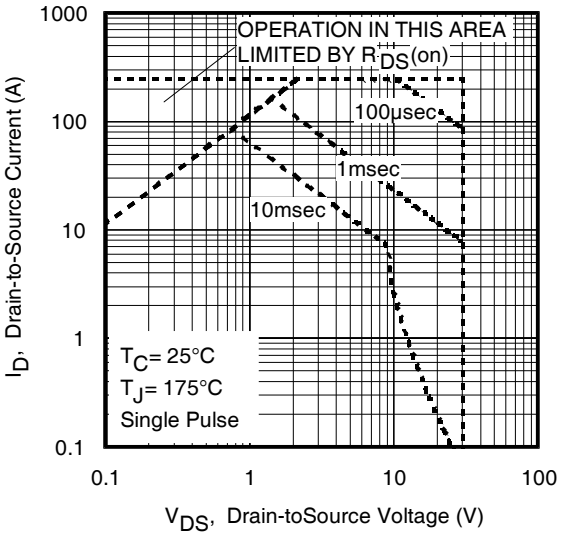

Fig 8. Maximum Safe Operating Area

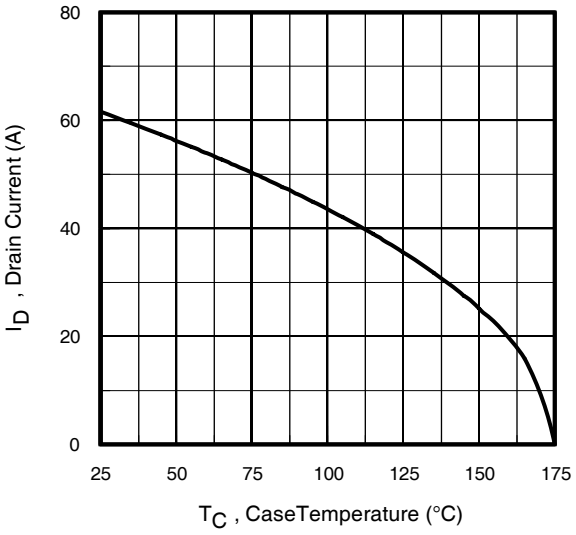

Fig 9. Maximum Drain Current vs. Case Temperature

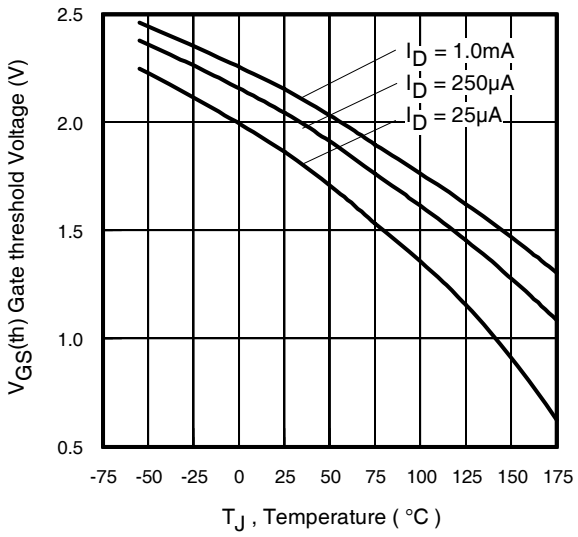

Fig 10. Threshold Voltage vs. Temperature

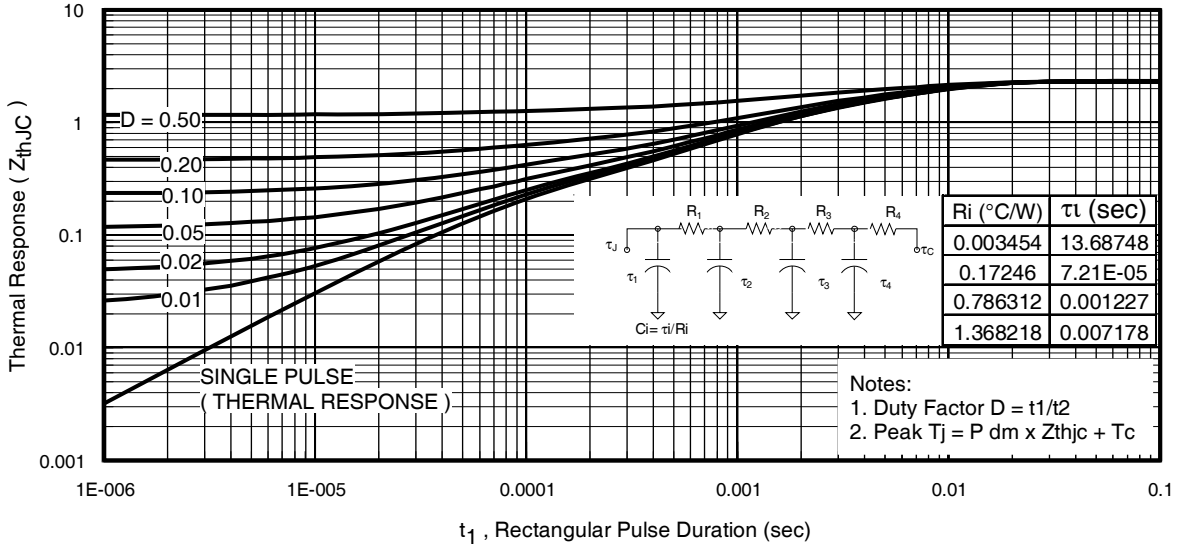

Fig 11. Maximum Effective Transient Thermal Impedance, Junction-to-Case

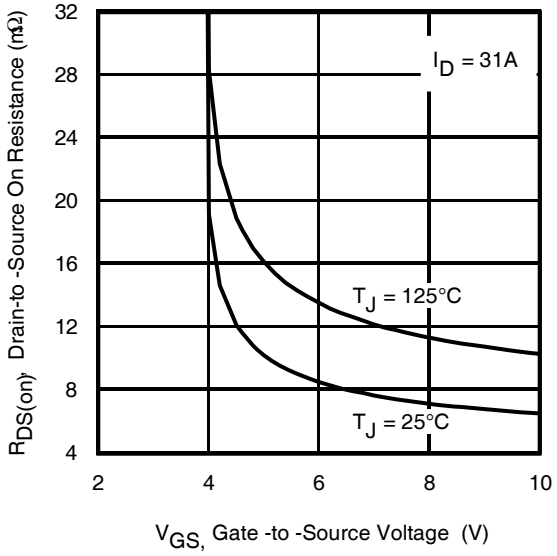

Fig 12. On-Resistance vs. Gate Voltage

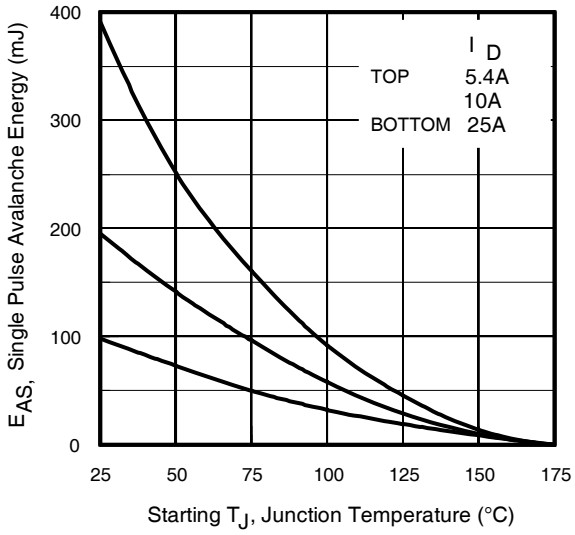

Fig 13a. Maximum Avalanche Energy vs. Drain Current

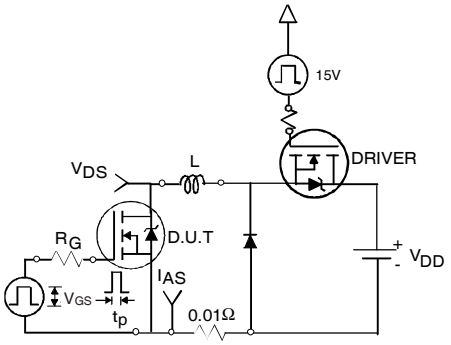

Fig 13b. Unclamped Inductive Test Circuit

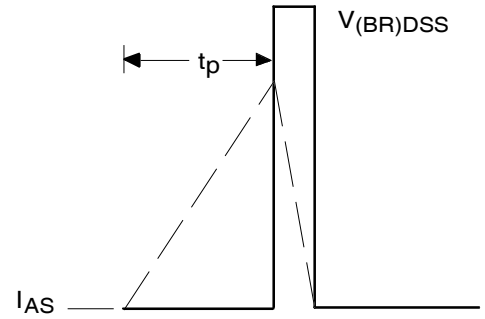

Fig 13c. Unclamped Inductive Waveforms

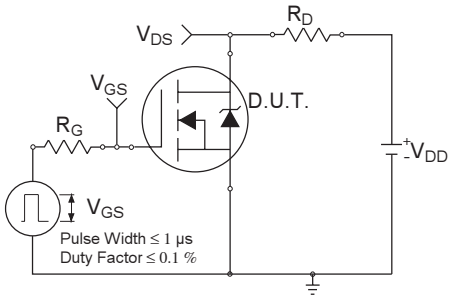

Fig 14a. Switching Time Test Circuit

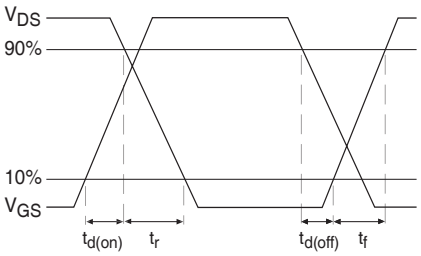

Fig 14b. Switching Time Waveforms

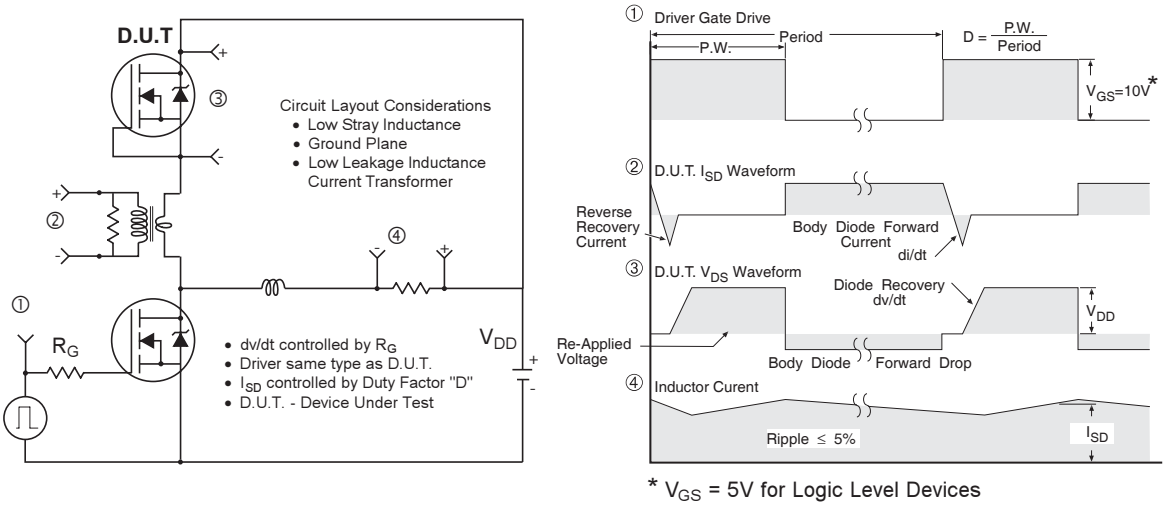

Fig 15. Peak Diode Recovery dv/dt Test Circuit for N-Channel HEXFET® Power MOSFETs

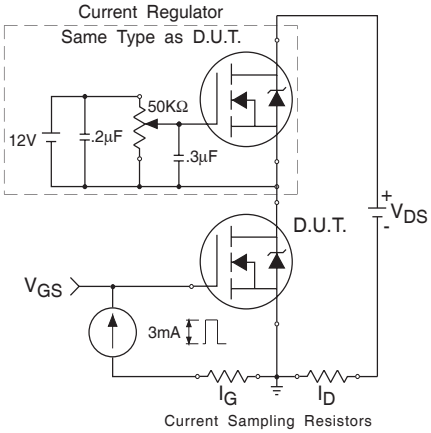

Fig 16a. Gate Charge Test Circuit

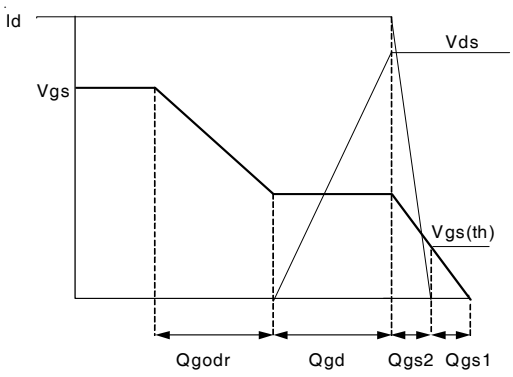

Fig 16b. Gate Charge Waveform

TO-220AB Package Outline (Dimensions are shown in millimeters (inches))

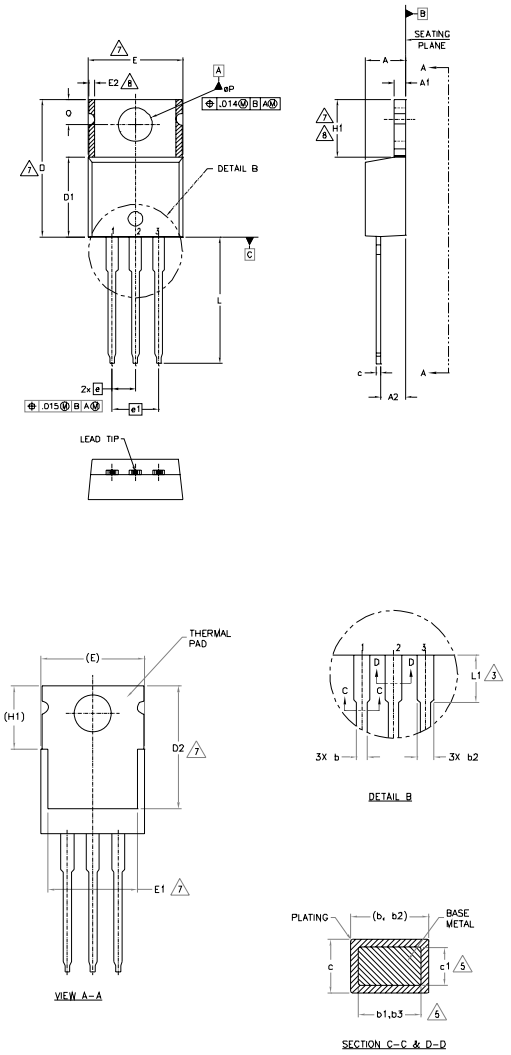

NOTES:

1.– DIMENSIONING AND TOLERANCING AS PER ASME Y14.5 M– 1994.
2.– DIMENSIONS ARE SHOWN IN INCHES [MILLIMETERS].
3.– LEAD DIMENSION AND FINISH UNCONTROLLED IN L1.
4.– DIMENSION D, D1 & E DO NOT INCLUDE MOLD FLASH. MOLD FLASH SHALL NOT EXCEED .005" (0.127) PER SIDE. THESE DIMENSIONS ARE MEASURED AT THE OUTERMOST EXTREMES OF THE PLASTIC BODY.
5.– DIMENSION b1, b3 & c1 APPLY TO BASE METAL ONLY.
6.– CONTROLLING DIMENSION : INCHES.
7.– THERMAL PAD CONTOUR OPTIONAL WITHIN DIMENSIONS E,H1,D2 & E1
8.– DIMENSION E2 X H1 DEFINE A ZONE WHERE STAMPING AND SINGULATION IRREGULARITIES ARE ALLOWED.
9.– OUTLINE CONFORMS TO JEDEC TO-220, EXCEPT A2 (max.) AND D2 (min.) WHERE DIMENSIONS ARE DERIVED FROM THE ACTUAL PACKAGE OUTLINE.

SYMBOL	DIMENSIONS				NOTES
	MILLIMETERS		INCHES		
	MIN.	MAX.	MIN.	MAX.	
A	3.56	4.83	.140	.190	
A1	0.51	1.40	.020	.055	
A2	2.03	2.92	.080	.115	
b	0.38	1.01	.015	.040	
b1	0.38	0.97	.015	.038	5
b2	1.14	1.78	.045	.070	
b3	1.14	1.73	.045	.068	5
c	0.36	0.61	.014	.024	
c1	0.36	0.56	.014	.022	5
D	14.22	16.51	.560	.650	4
D1	8.38	9.02	.330	.355	
D2	11.68	12.88	.460	.507	7
E	9.65	10.67	.380	.420	4,7
E1	6.86	8.89	.270	.350	7
E2	–	0.76	–	.030	8
e	2.54 BSC		.100 BSC		
e1	5.08 BSC		.200 BSC		
H1	5.84	6.86	.230	.270	7,8
L	12.70	14.73	.500	.580	
L1	3.56	4.06	.140	.160	3
øP	3.54	4.08	.139	.161	
Q	2.54	3.42	.100	.135	

LEAD ASSIGNMENTS

HEXFET
1.- GATE
2.- DRAIN
3.- SOURCE

IGBTs, CoPACK
1.- GATE
2.- COLLECTOR
3.- EMITTER

DIODES
1.- ANODE
2.- CATHODE
3.- ANODE

TO-220AB packages are not recommended for Surface Mount Application.

Note: For the most current drawing please refer to IR website at: http://www.irf.com/package/

TO-220AB Part Marking Information

EXAMPLE: THIS IS AN IRF1010
LOT CODE 1789
ASSEMBLED ON WW 19, 2000
IN THE ASSEMBLY LINE "C"

Note: "P" in assembly line position indicates "Lead - Free"

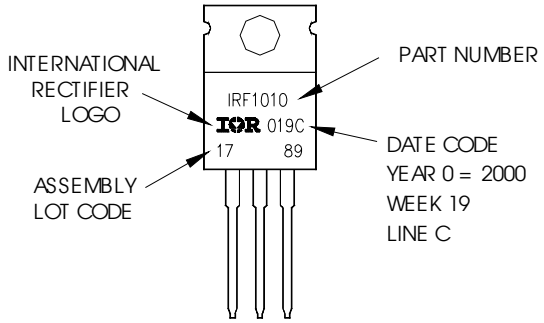

Note: For the most current drawing please refer to IR website at: http://www.irf.com/package/

Notes:

① Repetitive rating; pulse width limited by max. junction temperature.
② Starting $T_J = 25°C$, L = 0.32mH, $R_G = 25\Omega$, $I_{AS} = 25A$.
③ Pulse width ≤ 400µs; duty cycle ≤ 2%.
④ When mounted on 1" square PCB (FR-4 or G-10 Material). For recommended footprint and soldering techniques refer to application note #AN-994.
⑤ R_θ is measured at T_J approximately 90°C.

Data and specifications subject to change without notice.
This product has been designed and qualified for the Industrial market.
Qualification Standards can be found on IR's Web site.

International
IOR Rectifier

IR WORLD HEADQUARTERS: 233 Kansas St., El Segundo, California 90245, USA Tel: (310) 252-7105
TAC Fax: (310) 252-7903
Visit us at www.irf.com for sales contact information.04/2009