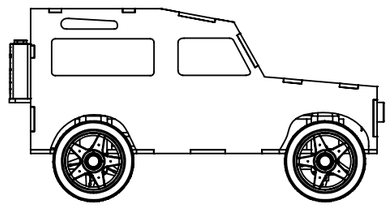

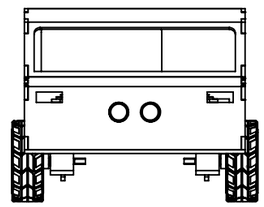

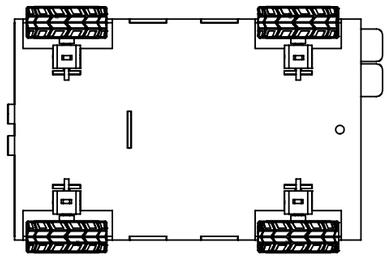

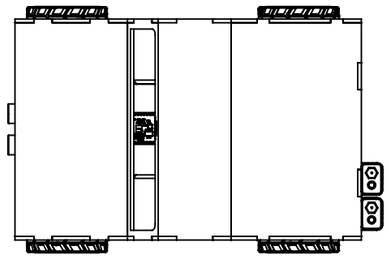

Scale 1:3

Scale 1:3

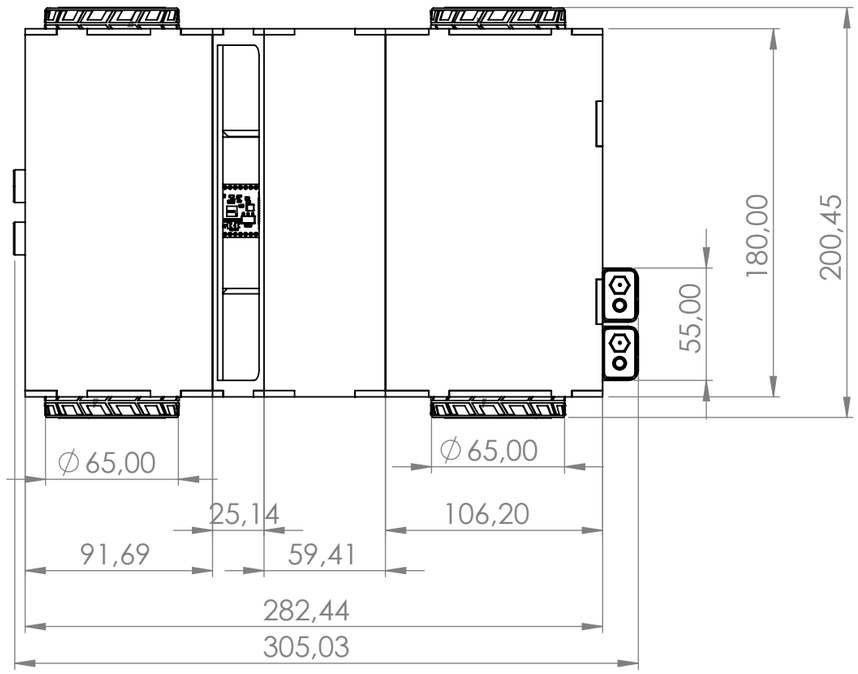

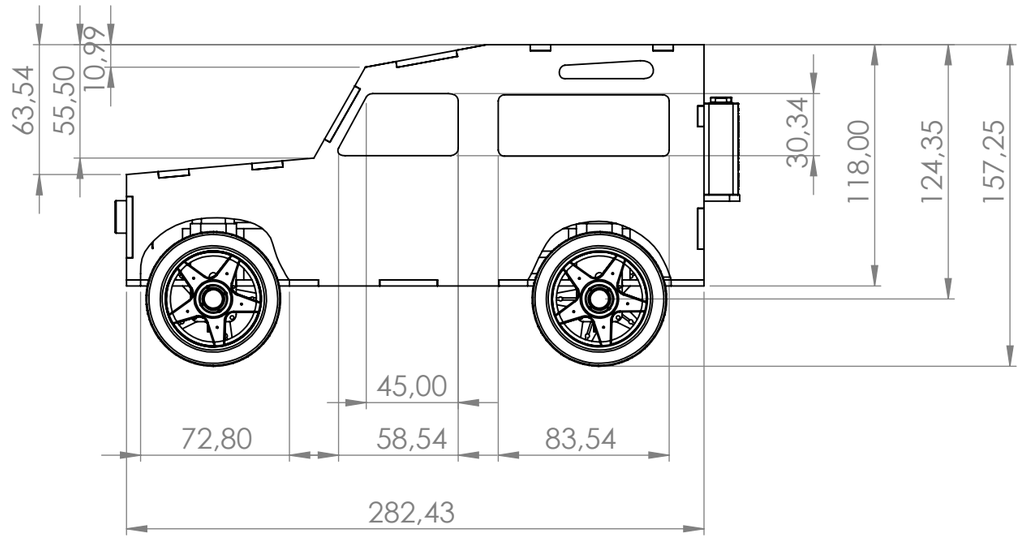

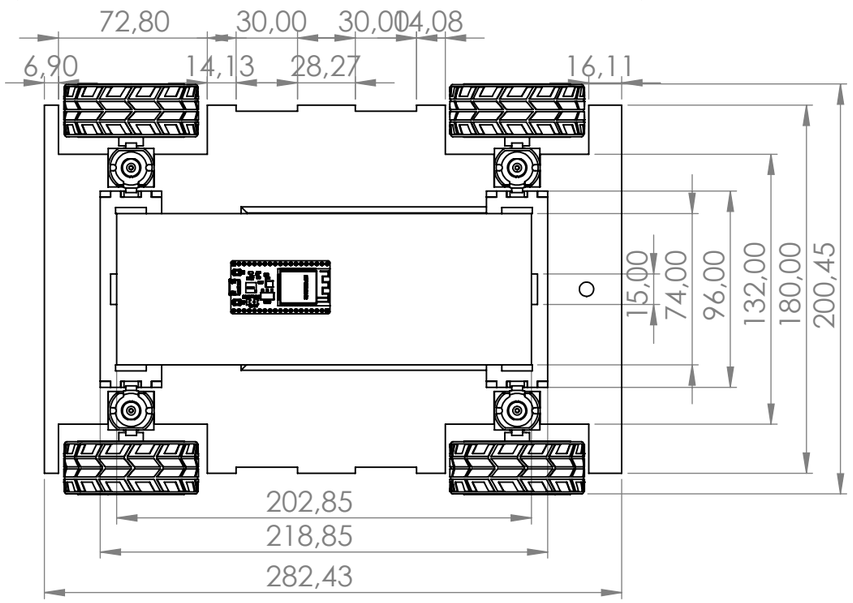

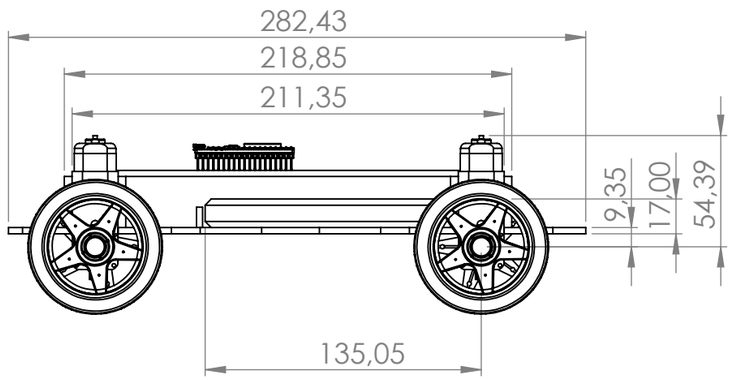

TITLE:

RescueCar.v4

SCALE:1:5 | SHEET 1 OF 1 | A3

SOLIDWORKS Educational Product. For Instructional Use Only.