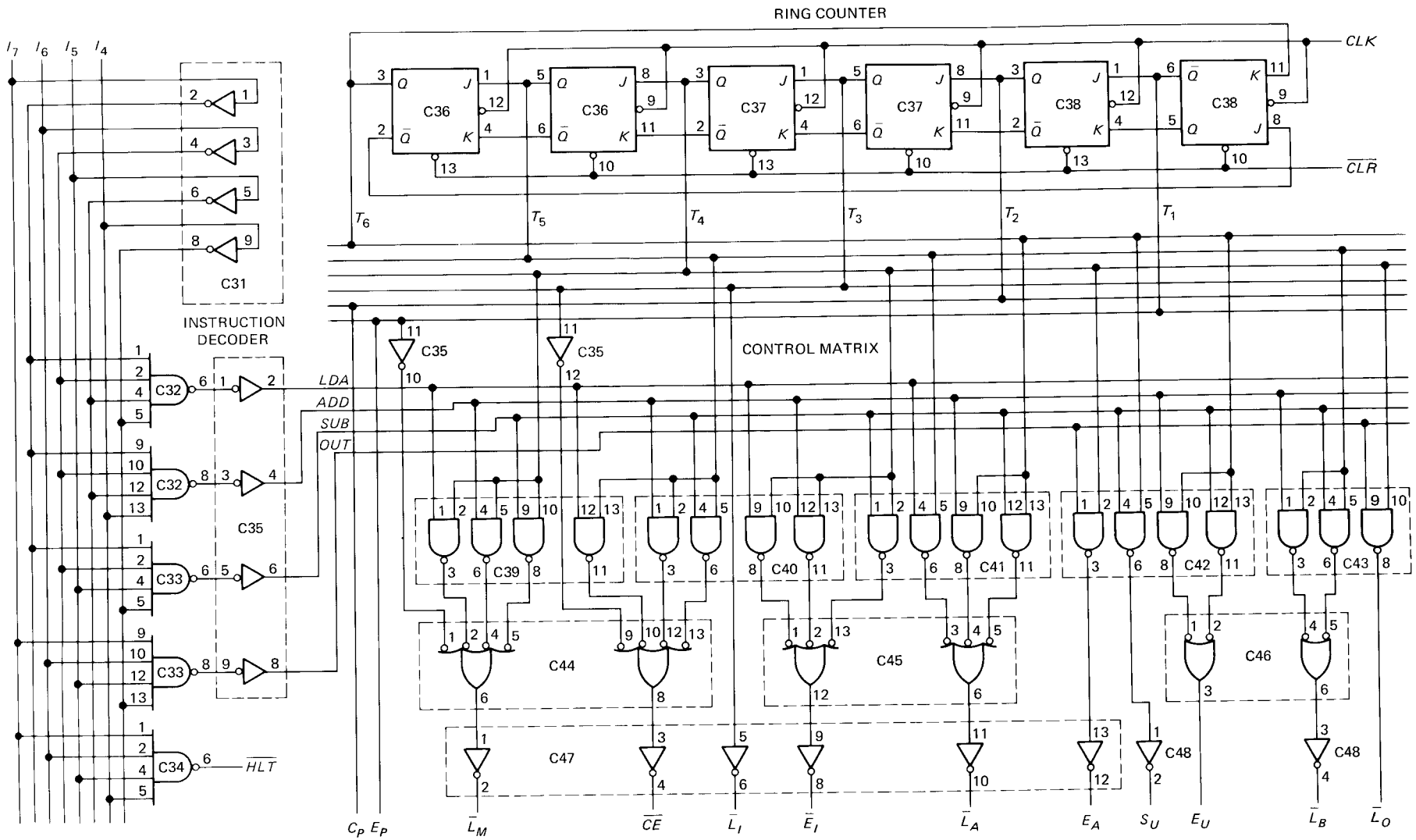

Fig. 10-15 Instruction decoder, ring counter, and control matrix.