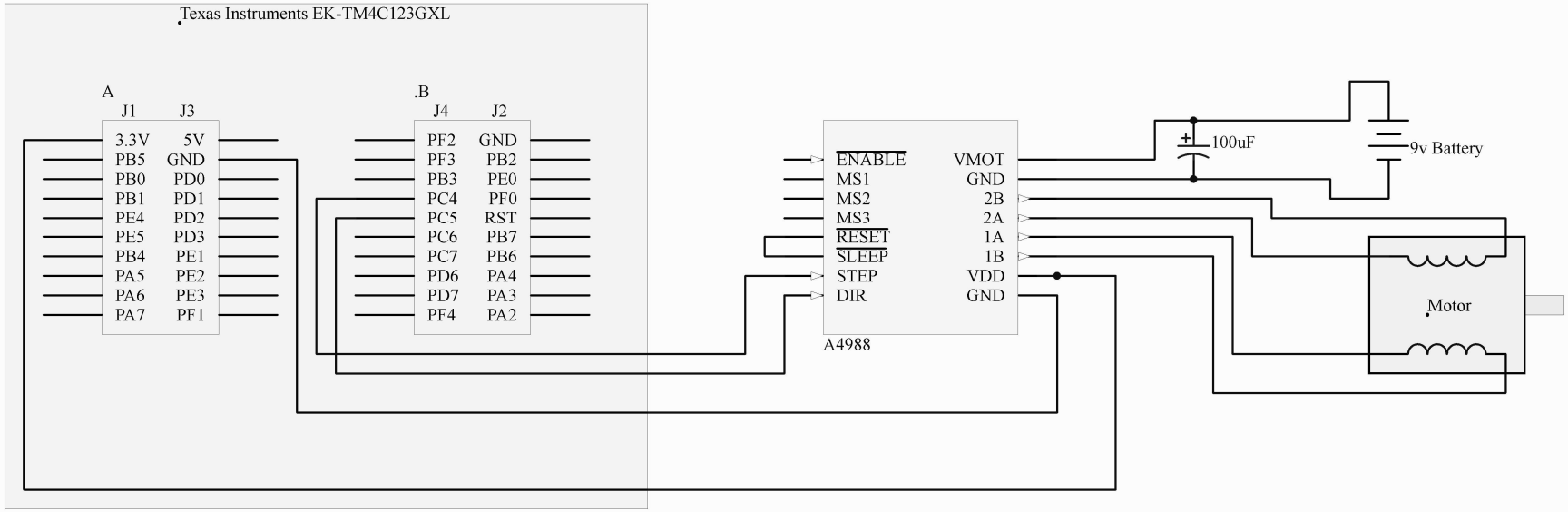

Title Motor and Motor Driver Testing		
Size A	Number	Revision 1.0
Date: 10/14/2019		Sheet of
File: MotorTest.SchDoc		Drawn By: Raul Solorio