LOWARA
a xylem brand

46SVH2N075T/4

Technical data

Company name
Contact
Phone number
e-mail address

WDAPOMPEN

Operating data

Pumpe type	Single head pump			Fluid			Water, pure
No. of pumps	/ Reserve		1 / 0	Operating temperature t A		°C	4
Nominal flow		m³/h	0	pH-value at t A			7
Nominal head		m	0	Density at t A		kg/dm³	1
Static head		m	0	Kin. viscosity at t A		mm²/s	1,569
Inlet pressure		bar	0,098	Vapor pressure at t A		bar	0,0083
Environmental temperature		°C	20	Solids			0
Available system NPSH		m	0	Altitude		m	0

Pump data

Make	Lowara				Nominal	m³/h		(	)
Speed		1/min	2900	Flow	Max-	m³/h	60		
Number of stages			2		Min-	m³/h			
Max. casing pressure		bar			Nominal	m			
Max. working pressure		bar	5,2	Head	at Qmax	m	25,1		
Head H(Q=0)		m	53		at Qmin	m	52,6		
Weight		kg	122	Shaft power		kW		(	)
	Max.	mm	133	Max. shaft power		kW	6,8		
Impeller R	designed	mm	133	Efficiency		%			
	Min.	mm	133	NPSH 3%		m			

Pump Materials

Pump body	Stainless steel / AISI 316 cast
Lower support	Stainless steel / AISI 316 cast
Impeller	Stainless steel / AISI 316L
Diffuser	Stainless steel / AISI 316L
Outer sleeve	Stainless steel / AISI 316L
Shaft	Duplex Stainless steel
Adapter	Cast iron
Wear ring	Technopolymer PPS
Coupling	Cast iron
Upper head	Stainless steel / AISI 316 cast
SEAL HOUSING	Stainless steel / AISI 316 cast
Coupling protection	Stainless steel / AISI 304
Shaft sleeve and bushing	Tungsten carbide
Bushing for diffuser	Carbon
Fill / drain plugs	Stainless steel / AISI 316

Shaft Seal

e-SV Mechanical seal	Roten
e-SV - Uniten (-30 / +120 °C)	
1 - Rotating part	Silicon Carbide
2 - Stationary part	Resin impregnated carbon
3 - Elastomers	EPDM
4 - Springs	AISI 316
5 - Other components	AISI 316

Motor data

Manufacturer	Lowara PLM	Electric voltage	400 V	Speed	2920 1/min	Insulation class	F
Specific design	IE3 3ph Flange Motor - Premium Efficiency			Frame size	132 S	Colour	RAL 5010
Type	PLM 132 B5 7,5 kW						
Rated power	7,5 kW	Degree of protection	IP55				
Electric current	10,5 A						

Remarks:

LOWARA
a xylem brand

46SVH2N075T/4

Company name
Contact
Phone number
e-mail address

WDAPOMPEN

Product description

Model Type:	4.075
Rated output:	7.5 kW
Nominal input voltage:	380-460±15%
Max Input current:	16.9 A 3~
Efficiency Rated typical:	97 %
Output Voltage:	0-100% of supply voltage
Max output current:	17 A
Output Frequency:	15-70 (Hz)
Model Size:	B
Weight:	10.5 kg

Dimensions [mm]

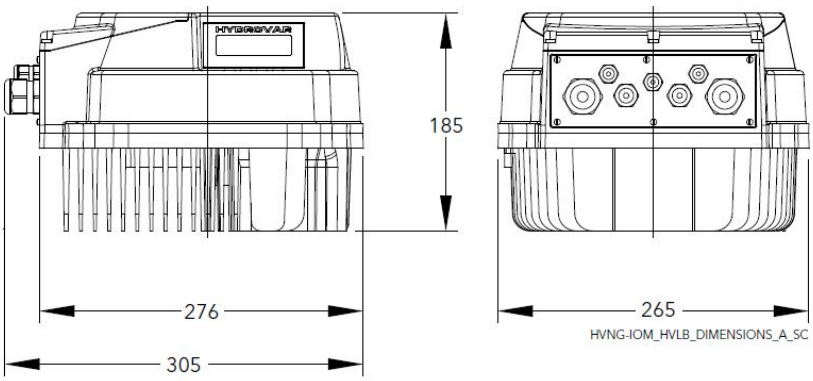

Dimensions and weight without obligation

Project		**Created by**	**Paul Niemeijer**	**Last update**	**12/8/2021**
Block	**46SVH2G075T/4**	**Created on**	**12/8/2021**		

Program version	Data version	User group(s)
60.0 - 08/10/2021 (Build 220)	03/11/2021 16:17	Xylem:Netherlands - EXT

LOWARA
a xylem brand

46SVH2N075T/4

Performance curve

Company name
Contact
Phone number
e-mail address

WDAPOMPEN

Hydraulic data

Operating Data Specification		Hydraulic data (duty point)	Impeller design	
Flow	0 m³/h	Flow	Impeller R	133 mm
Head	0 m	Head	Frequency	50 Hz
Static head	0 m	MEI >=0,7	Speed	2900 1/min

Power datas referced to:
Water, pure [100%] ; 4°C; 1kg/dm³; 1.57mm²/s
Performance according to ISO 9906:2012 – Grade 3B

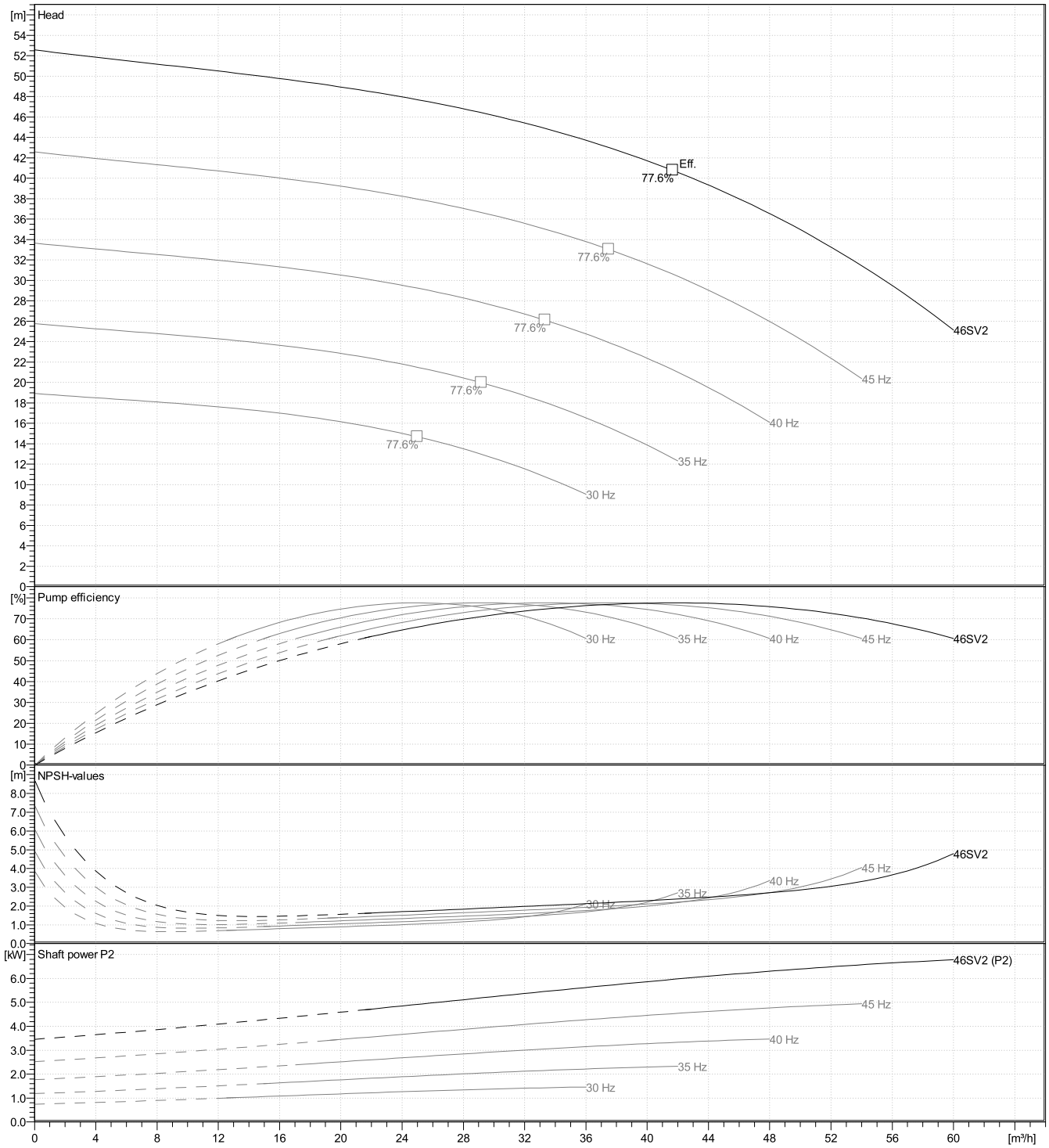

Project		Created by	Paul Niemeijer	Last update	12/8/2021
Block	46SVH2G075T/4	Created on	12/8/2021		

Program version	Data version	User group(s)
60.0 - 08/10/2021 (Build 220)	03/11/2021 16:17	Xylem:Netherlands - EXT

LOWARA
a xylem brand

46SVH2N075T/4

Dimensions

Company name
Contact
Phone number
e-mail address

WDAPOMPEN

Drawing

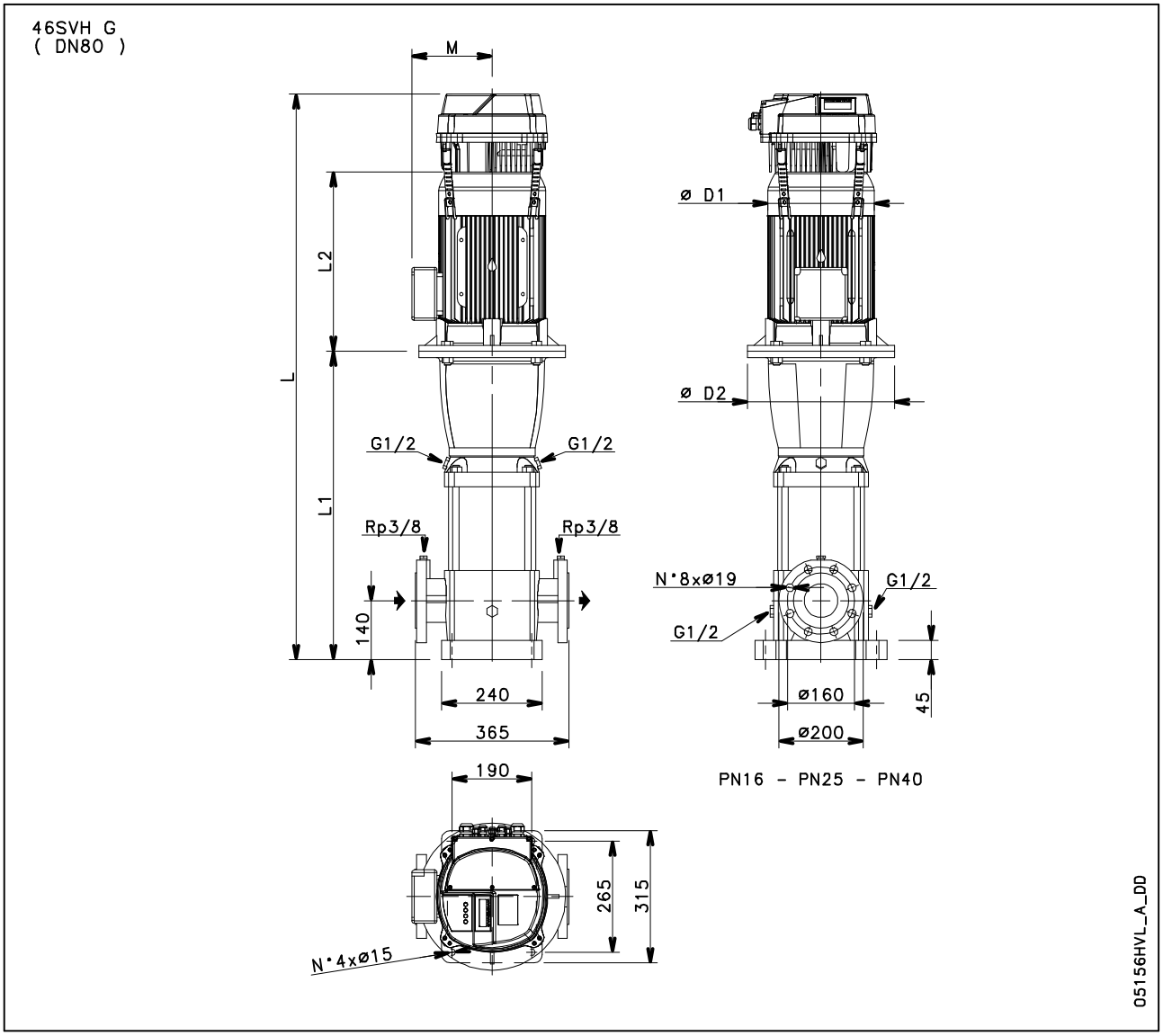

Dimensions mm

D1 D2 L1 L2 M	256 300 624 367 191					Weight On demand kg

Project Block	46SVH2G075T/4	Created by Created on	Paul Niemeijer 12/8/2021	Last update	12/8/2021

Program version	Data version	User group(s)
60.0 - 08/10/2021 (Build 220)	03/11/2021 16:17	Xylem:Netherlands - EXT