School of Engineering

T-ISC-ET-PM4 FS 2025

Concept Design Report of Radar System 3000

Rathgeb Dennis, 20-917-944
Tschopp Benjamin, 14-781-92
Uhlmann Bryan Marc, 14-615-21

April 18, 2026

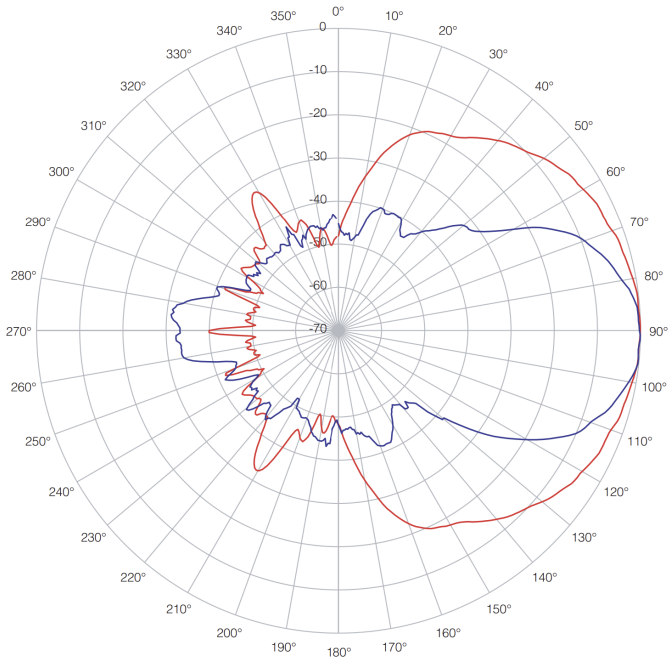

Abstract

This document presents the concept of the Radar System 3000. The Radar System 3000 will be designed with a microcontroller and a radar module. Based on the pulse echo technique the Radar System 3000 utilizes Frequency Modulated Continuous Wave (FMCW) modulation to measure the distance. With the help of the Doppler effect and a Continuous Wave (CW) the speed of objects will be determent. The Radar System 3000 is designed to detect car-sized objects at a range of up to 30 meters with a speed of up to 300 km/h. This report outlines the motivation, requirements, and technical concepts covering hardware, software, user interface, and additional features.

Table of Contents

1 Introduction **4**
1.1 General Principle 4
1.2 FMCW Radar 4
1.3 CW Radar 4
1.4 Requirements 5
1.5 Additional Features 5
2 Hardware Concept **6**
2.1 Block Diagram 6
3 Software Concept **7**
3.1 Firmware Block Diagram 7
4 User Interface **8**
4.1 LCD Display 8
4.2 WLAN Module 8
5 List of Figures **9**

1 Introduction

The proposed Radar System 3000 will be able to measure an object's distance up to 30 meters and speed up to 300 km/h. The integration of the STM32F4 microcontroller (MCU) unit ensures flexibility and high processing power. The project is valuable because of it's potential to provide real-time object detection at an extended range.

1.1 General Principle

The Radar System 3000 operates by transmitting electromagnetic waves and analyzing their reflections from objects. Figure 1 shows this basic principle. By measuring the time a transmitted signal takes to return, distance can be determined. A moving object causes a frequency shift in the reflection (Doppler effect), which reveals its velocity.

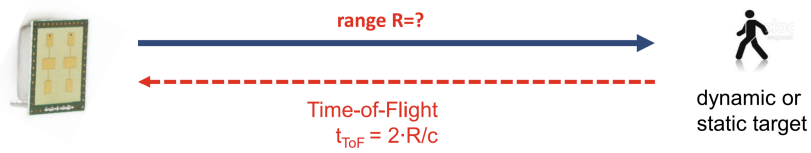

Figure 1: The basic principle of Radar Systems.

The 24GHz radar module allows for different techniques to be deployed: Frequency Modulated Continuous Wave (FMCW) for measuring object distance and Continuous Wave (CW) for determining object speed.

1.2 FMCW Radar

The FMCW radar will transmit a frequency modulated signal in the form of a linear chirp. The transmitted wave gradually sweeps through a range of frequencies over a known time period. When this signal is reflected off an object, the received wave is delayed relative to the transmitted wave. The difference in frequency between the transmitted and received signals, known as the beat frequency, is proportional to the distance of the object.
FMCW radar offers several advantages over conventional pulsed radar, including:

- Accurate range resolution over measured distance.
- Simultaneous distance and speed measurement by analyzing the beat frequency and it's phase shift over time.
- Operate with lower peak power. More energy efficient and suitable for embedded applications.

By leveraging these benefits, the proposed radar sensor module enables accurate and efficient detection of objects within a range of 30 meters, making it suitable for automotive and industrial applications.

1.3 CW Radar

Additionally, due to the Doppler effect, any motion of the object relative to the radar causes a frequency shift, which can be used to calculate its velocity.
By leveraging these benefits, the proposed radar sensor module enables accurate and efficient detection of objects within a range of 30 meters, making it suitable for automotive and industrial applications.

1.4 Requirements

The Radar Board is required to fulfill the following specifications:

- Detect car-sized objects from a distance of 1 m up to 30 m.
- Measure car-sized object's speed from 10 km/h up to 300 km/h.
- Measuring distance using FMCW modulation.
- Measuring speed using CW.
- Robust signal processing algorithm.
- User-friendly interface for configuration and monitoring.

1.5 Additional Features

The following functions are optional:

- Measuring speed using FMCW modulation.
- Buzzer for audible feedback.
- Transmitting data over WLAN for a integration with an Internet of Things Network (IoT) or desktop application.

2 Hardware Concept

Figure 2 gives an overview of the hardware, including the STM32 Development Board, Radar Module, Radar Board, and other peripherals.

The firmware runs on the STM32 Development Board, while all signal processing takes place on the Radar Board.

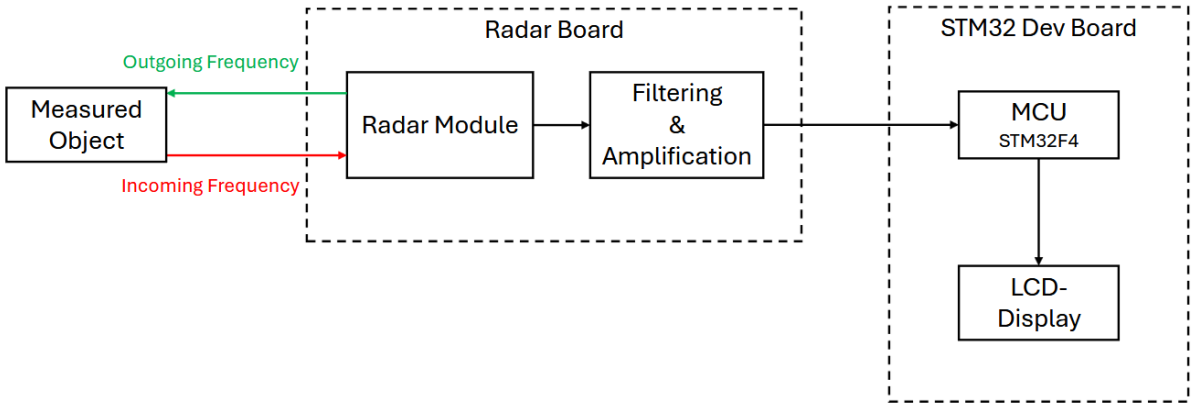

Figure 2: Block diagram overview

2.1 Block Diagram

Figure 3 illustrates the interconnections between the radar module, MCU, power supply, and interfaces.

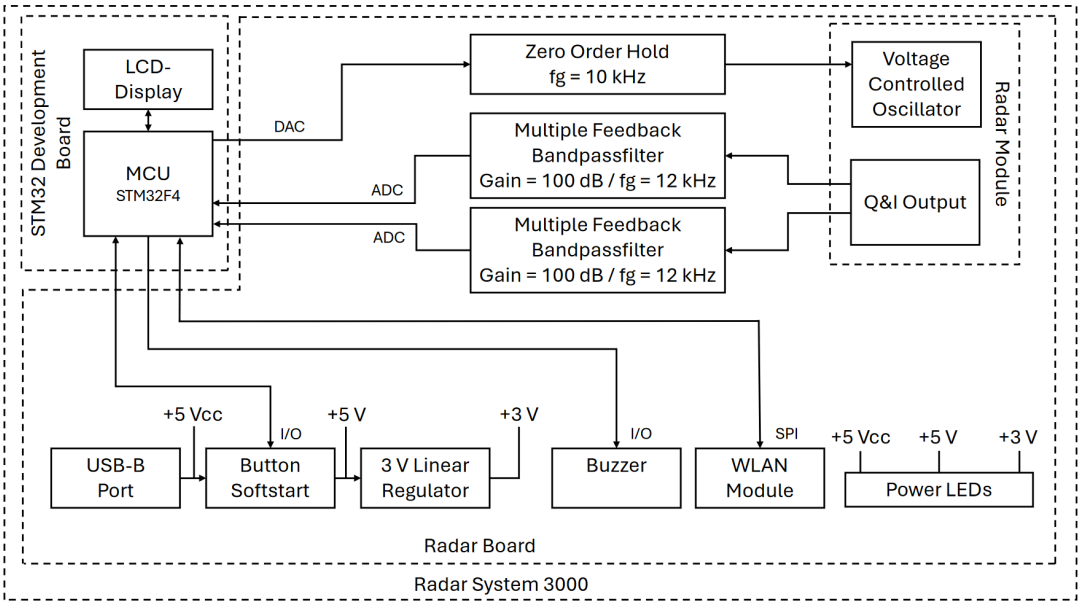

Figure 3: Block diagram of hardware

3 Software Concept

The software will implement:

- FMCW and CW signal processing algorithms for extracting distance and speed information.
- Real-time data acquisition and filtering techniques.
- Precise frequency control and regulation of the radar module.
- User interface management.
- Error detection and handling mechanisms to enhance reliability.

3.1 Firmware Block Diagram

Figure 4 illustrates the processing stages from radar signal acquisition to output data presentation.

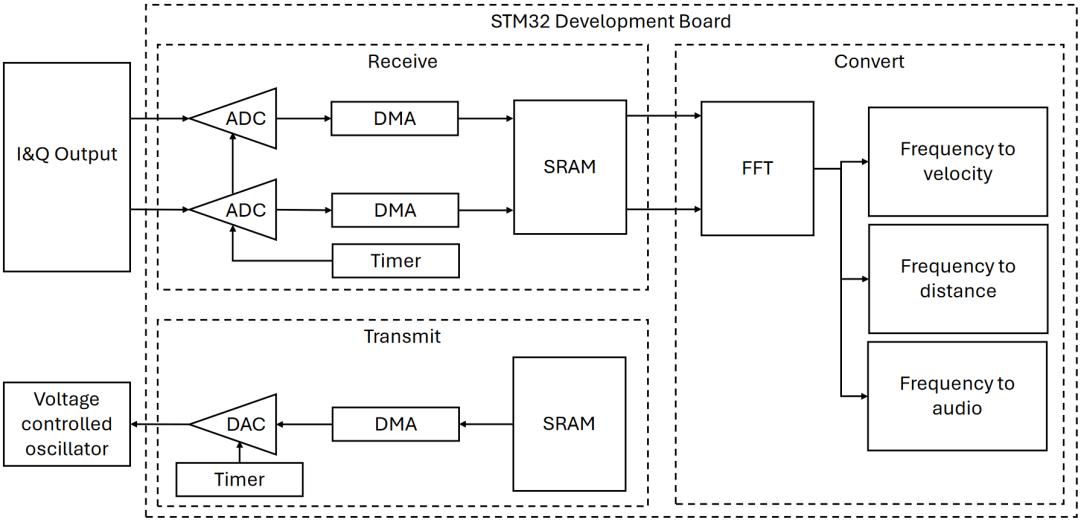

Figure 4: Block diagram of hardware

4 User Interface

To enhance the user experience, the system includes multiple feedback mechanisms for local and remote interaction. A liquid crystal display provides real-time visualization of key radar measurements, while a WLAN module enables wireless communication with IoT devices, desktop applications, or mobile apps. Additionally, an integrated buzzer offers audible alerts when specific thresholds are exceeded, such as detecting an object at a critical speed. This combination of visual, auditory, and wireless feedback mechanisms improves the usability and functionality of the radar module in various application scenarios.

4.1 LCD Display

The Radar System 3000 includes a touch sensitive LCD display to provide real-time feedback and system status information to the user. The display is used to present key radar measurements, such as detected object distance and speed. Additionally, it will show system status messages, error warnings, or configuration settings.
The main functions of the LCD display include:

- **Real-time Data Visualization:** Displaying detected object parameters such as range and speed.
- **Status Indications:** Showing connectivity status and error messages.
- **User Interaction:** Providing visual feedback during parameter configuration and calibration.

The LCD display ensures local usability of the radar system, even when no wireless connection is available.

4.2 WLAN Module

The WLAN module serves as a crucial component for enabling wireless communication between the Radar System 3000 and various IoT devices, desktop applications, or mobile applications. By integrating WLAN functionality, the system allows real-time transmission of processed radar data to remote clients, facilitating monitoring, logging, and further analysis.

The key functionalities of the WLAN module will include:

- **Wireless data transmission:** The radar module can send distance and velocity measurements to an external device via a secure wireless connection.
- **Integration with IoT platforms:** The transmitted data could be processed and visualized on IoT dashboards, cloud services, or custom applications.
- **Remote configuration and control:** Users can adjust radar parameters, set detection thresholds, and update firmware remotely via a web interface or mobile app.

By incorporating this module from the outset, future enhancements in wireless communications will be seamlessly integrated, ensuring scalability and adaptability to evolving requirements.

5 List of Figures

1 The basic principle of Radar Systems. 4
2 Block diagram overview 6
3 Block diagram of hardware 6
4 Block diagram of hardware 7