ET.PM4 = Radar-Sensor

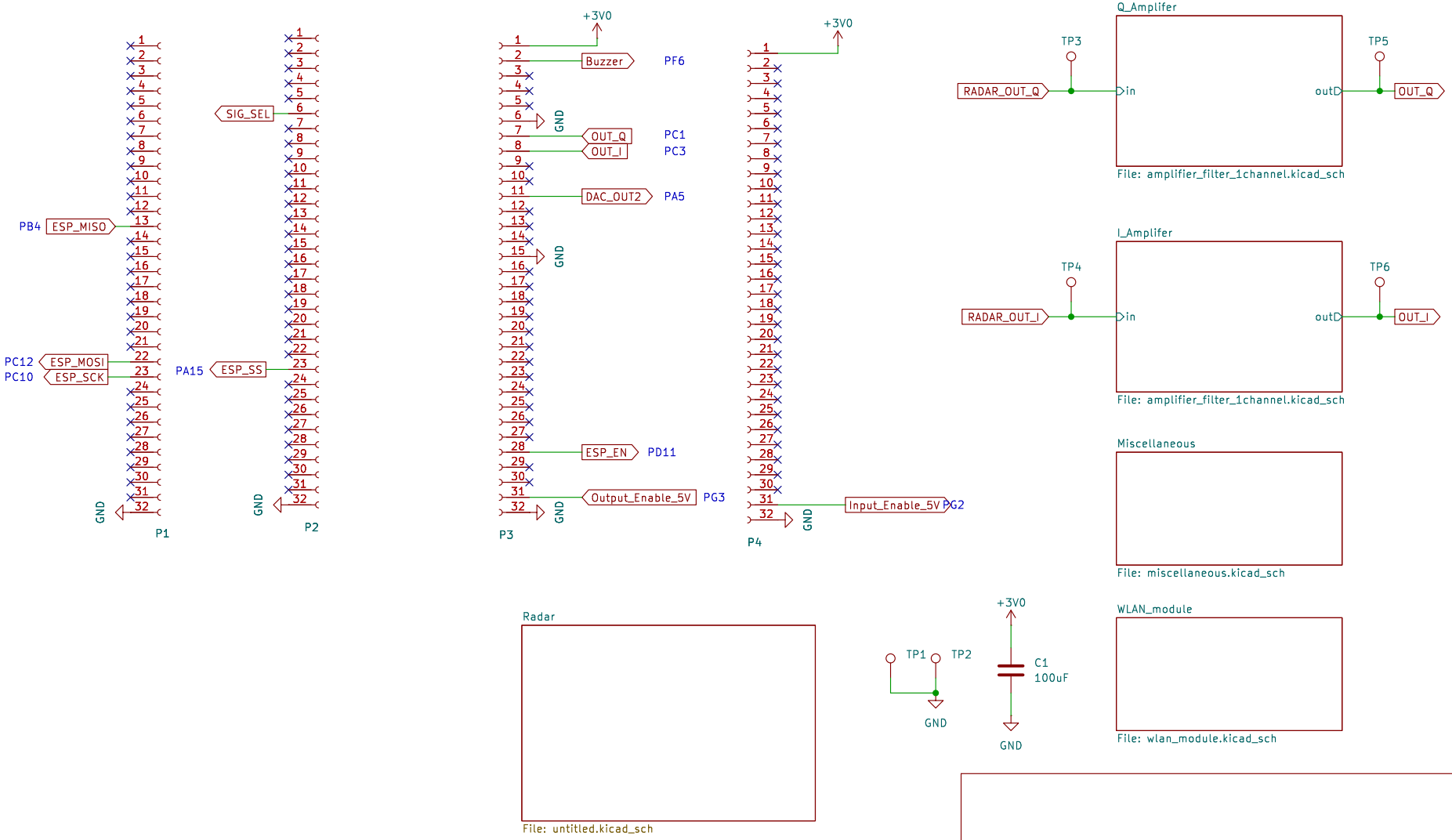

hhrt@zhaw.ch

Sheet: /
File: HW_Radar.kicad_sch

Title: Sensor-Board: HW template for ET.PM3 and ET.PM4

Size: A4	Date: 2022-12-22	Rev:
KiCad E.D.A. 9.0.0		Id: 1/6

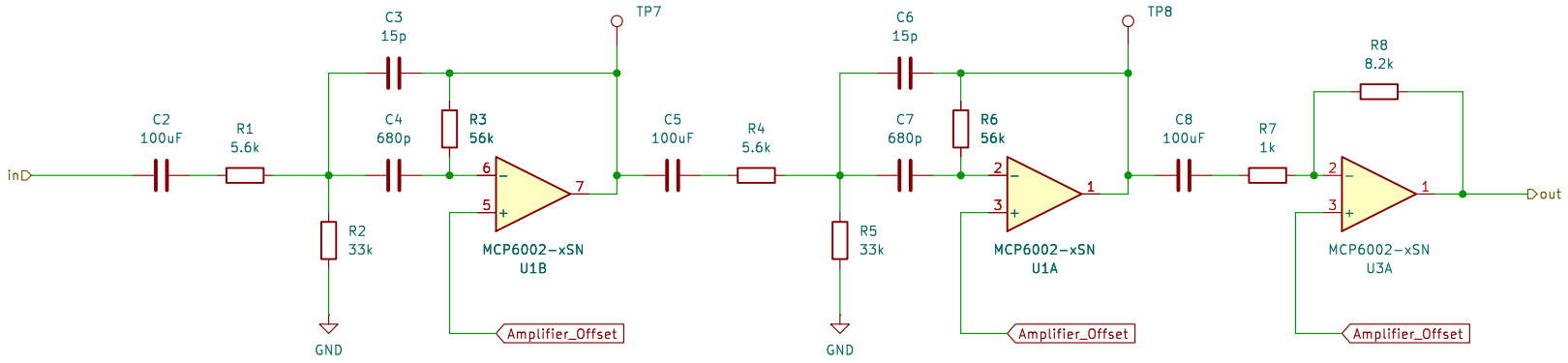

hhrt@zhaw.ch

Sheet: /Q_Amplifer/
File: amplifier_filter_1channel.kicad_sch

Title: Amplifiers and Filters

Size: A4	Date: 2022-12-22	Rev:
KiCad E.D.A. 9.0.0		Id: 3/6

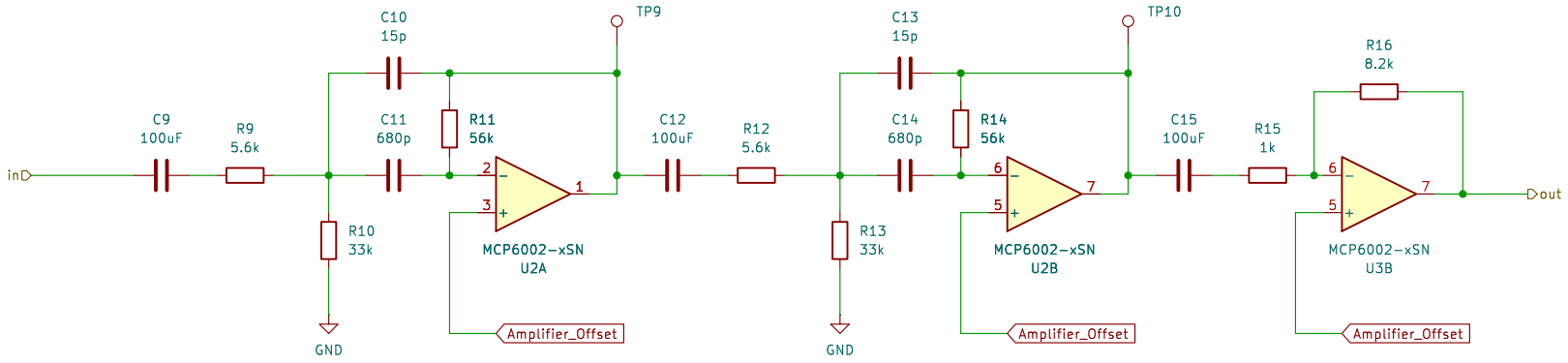

hhrt@zhaw.ch

Sheet: /I_Amplifer/
File: amplifier_filter_1channel.kicad_sch

Title: Amplifiers and Filters

Size: A4	Date: 2022-12-22	Rev:
KiCad E.D.A. 9.0.0		Id: 4/6

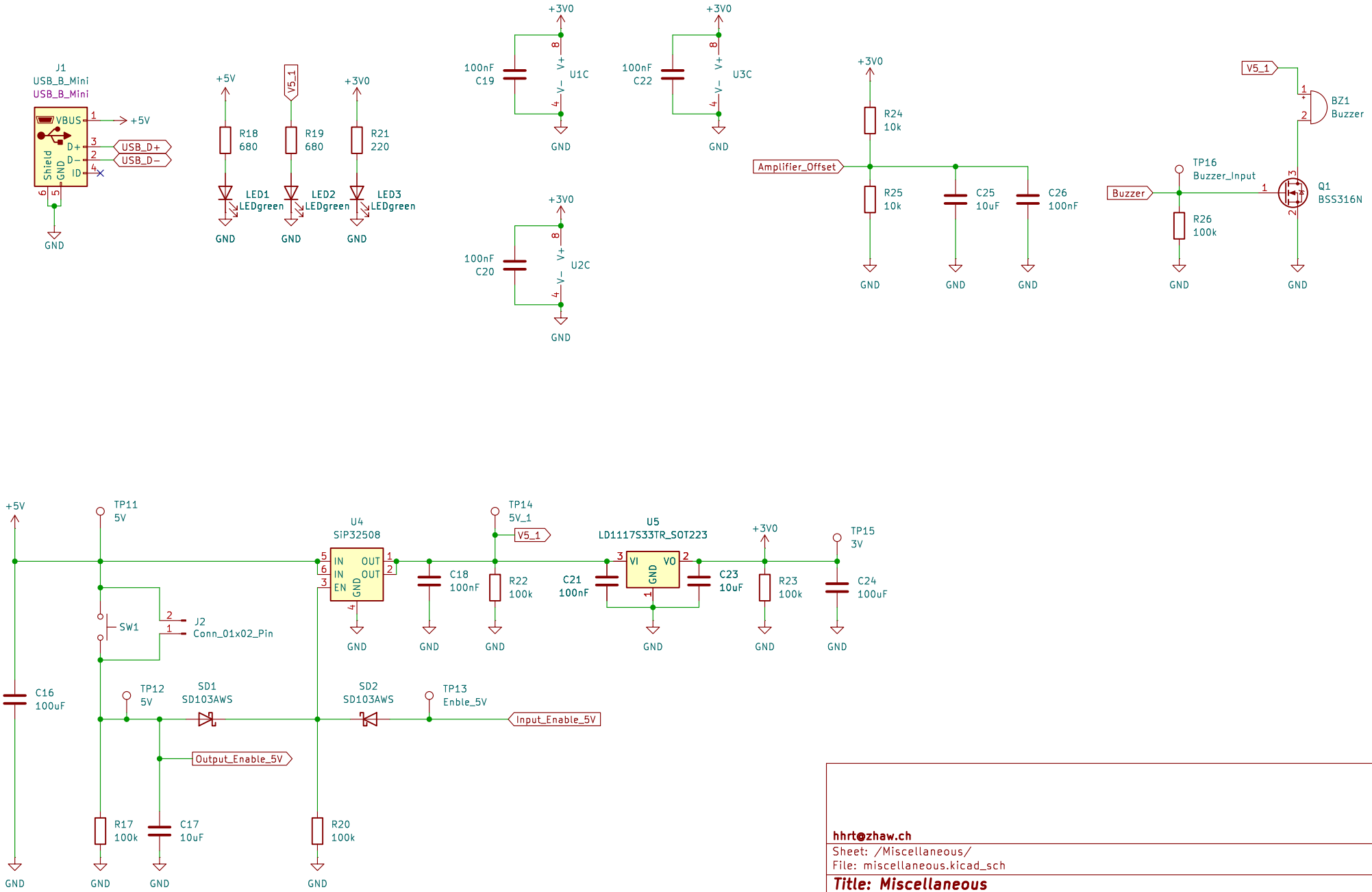

hhrt@zhaw.ch

Sheet: /Miscellaneous/
File: miscellaneous.kicad_sch

Title: Miscellaneous

Size: A4	Date: 2022-12-22	Rev:
KiCad E.D.A. 9.0.0		Id: 5/6

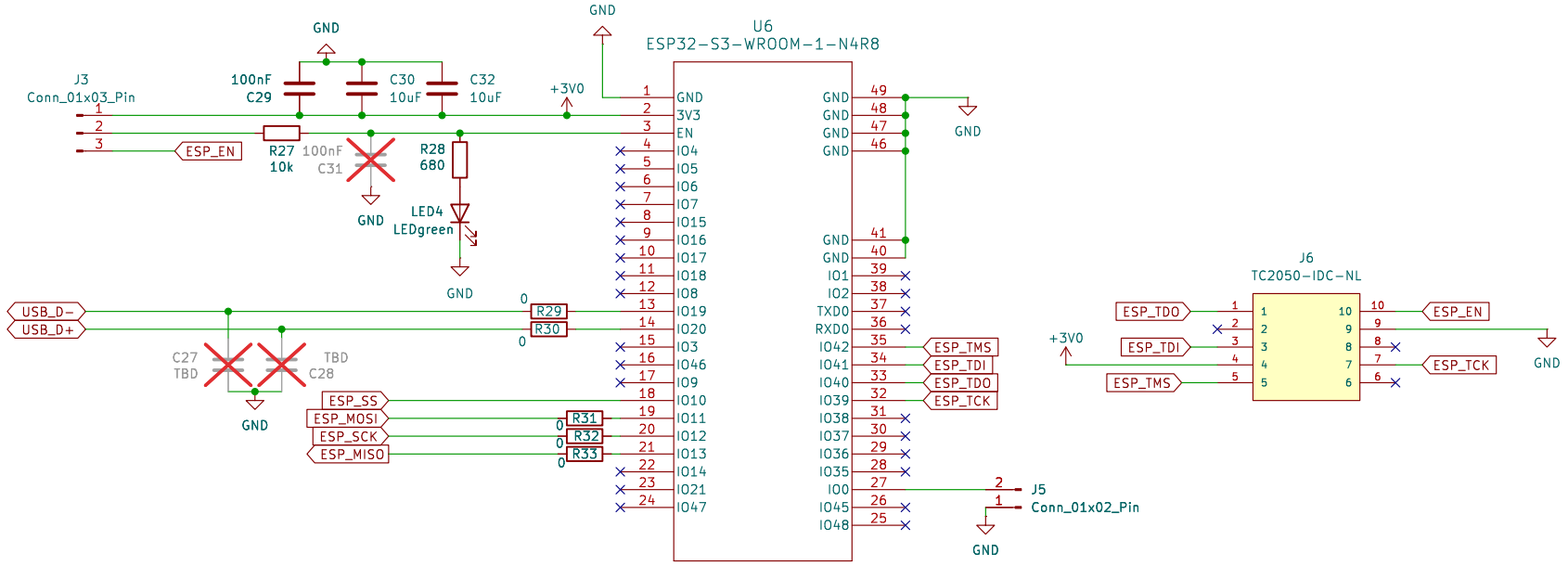

Sheet: /WLAN_module/
File: wlan_module.kicad_sch

Title:

Size: A4	Date:	Rev:
KiCad E.D.A. 9.0.0		Id: 6/6

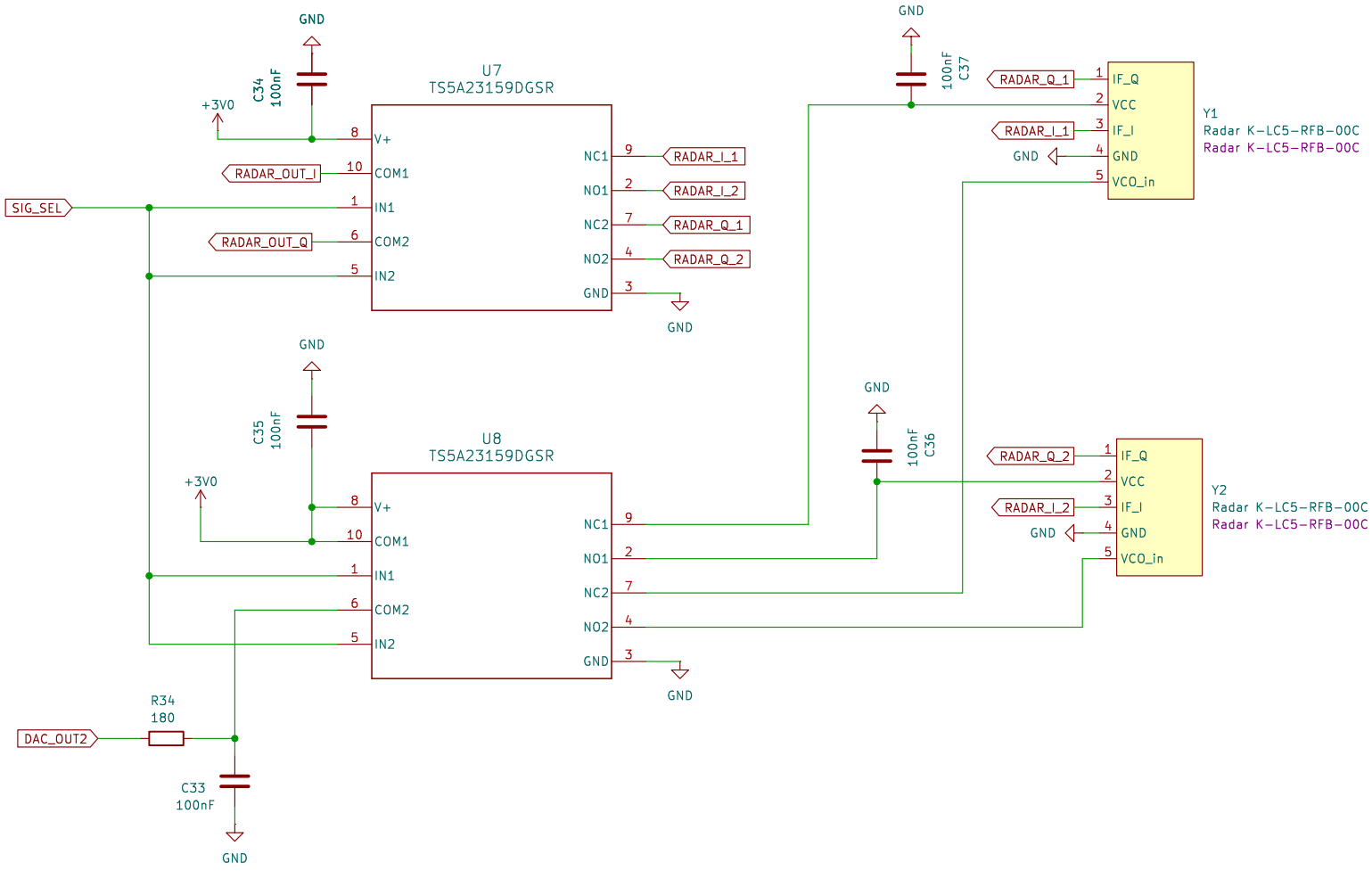

Sheet: /Radar/
File: untitled.kicad_sch

Title:

Size: A4	Date:	Rev:
KiCad E.D.A. 9.0.0		Id: 7/6