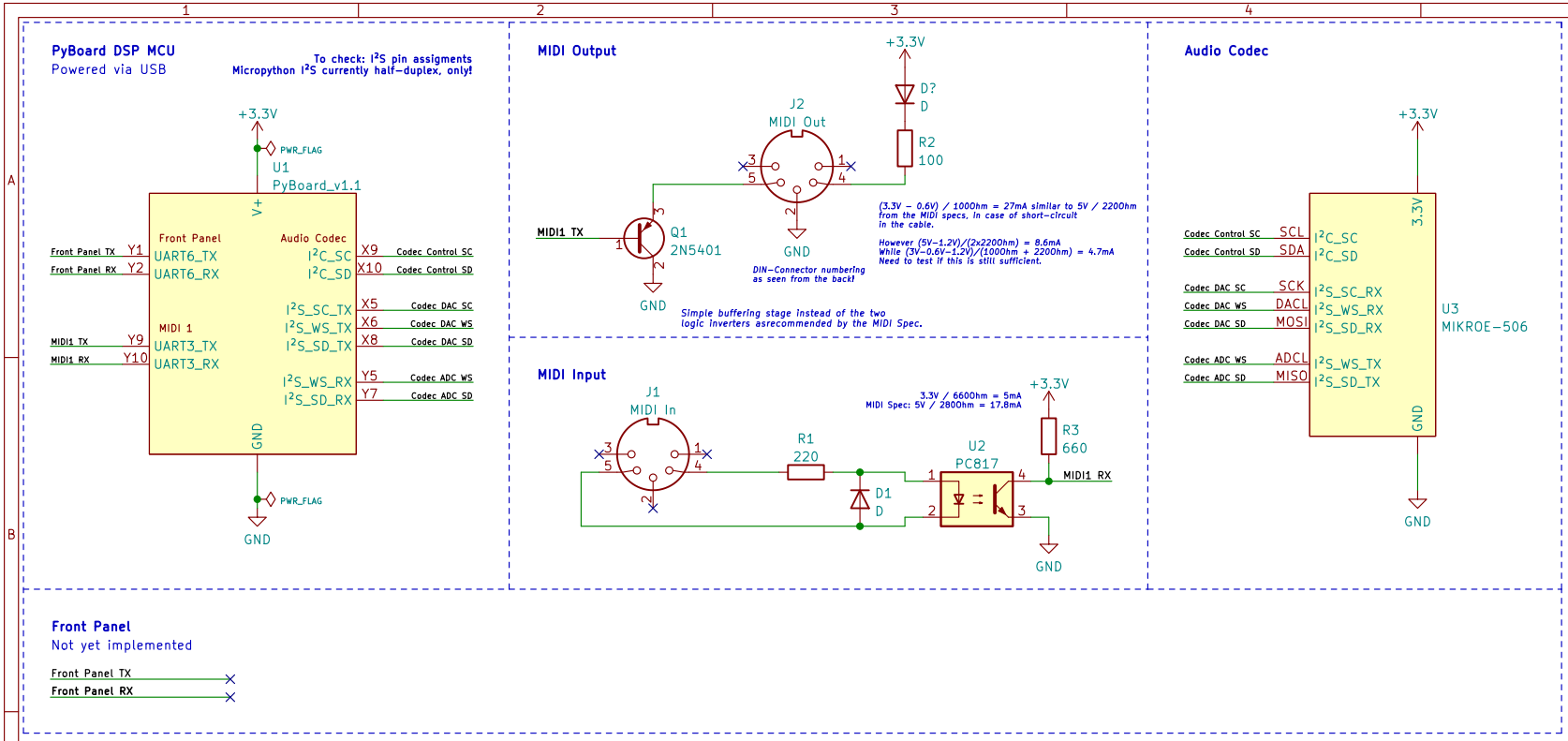

License: GNU Affero General Public License

Dennis Schulmeister-Zimolong

Sheet: /
File: PyBoard Prototype.kicad_sch

Title: µKlavier Prototype Hardware

Size: A4	Date: 2022-09-28	**Rev: 1**
KiCad E.D.A. kicad 6.0.5-2.fc35		Id: 1/1