Pod Pinout

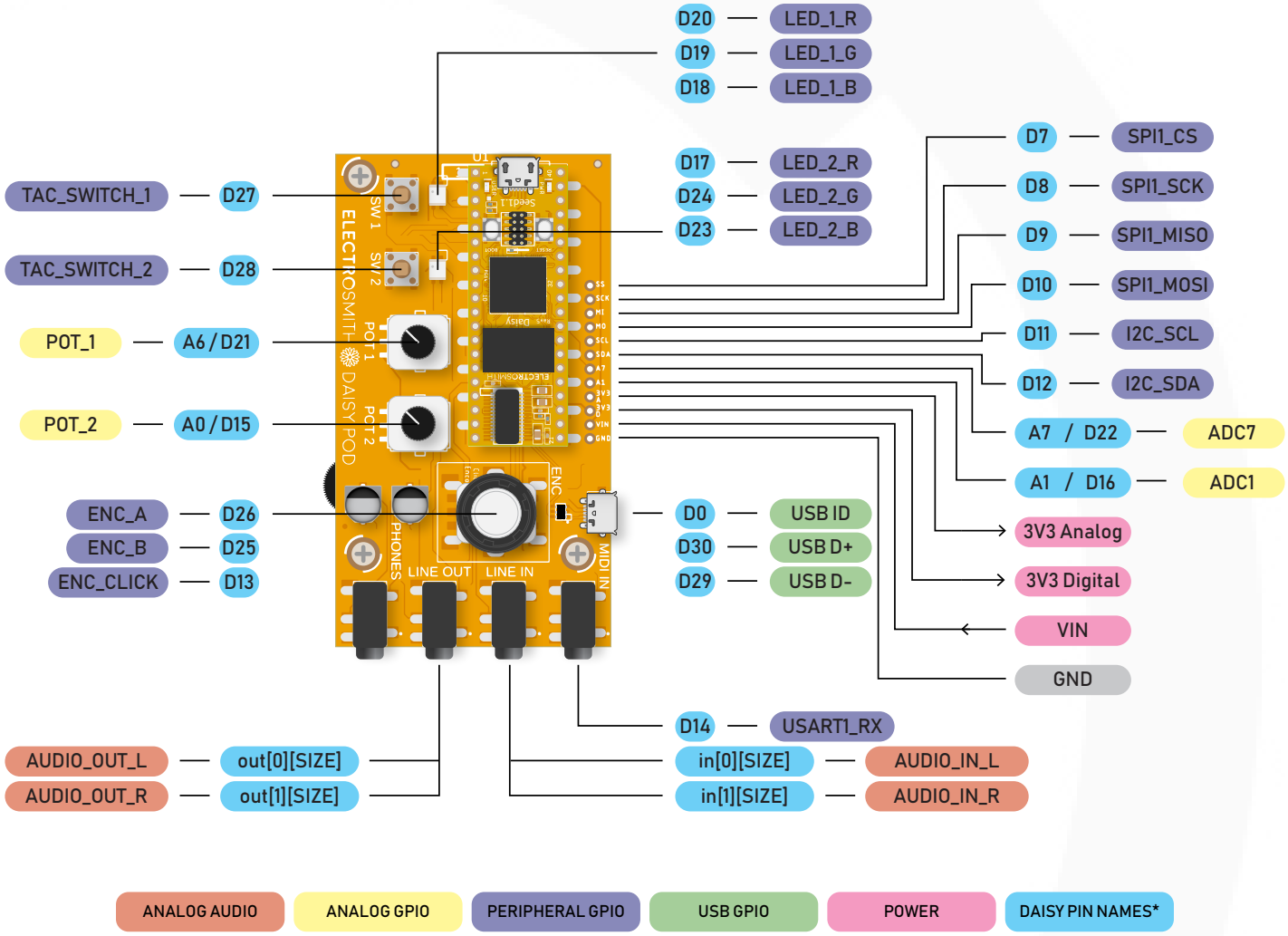

* "D" for Digital GPIO or "A" for Analog I/O, depending on use case.

Daisy Pod

Breakout Board for the Daisy Seed

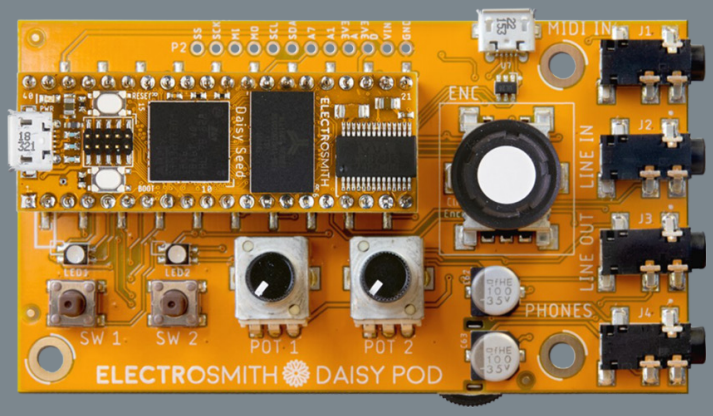

Features:

- Daisy Seed breakout board for line level audio applications
- USB Powered (microUSB port via Daisy Seed)
- Peripheral controls:
  - 2 plastic potentiometers, 10KB
  - 1 clicked encoder, D shaft
  - 2 tactile switches
  - 2 RGB LEDs
  - 1 rotary headphone volume control
- Board connectors
  - 3.5mm jacks for stereo audio IO
  - 3.5mm TRS MIDI input jack
  - 3.5mm stereo headphone jack
  - 1 onboard microUSB port
  - Extra pinouts for sensors and OLED screens
  - Extra pinouts for power and ground
- Open source hardware (MIT license)
- Comprehensive API including DSP building blocks, hardware functionality, and more.
- Daisy Seed onboard:
  - 96kHz / 24-bit audio hardware
  - 64MB of SDRAM for up to 10 minute long audio buffers
  - ARM Cortex-M7 MCU, running at 480MHz
  - 31 total GPIO pins with configurable functionality
  - 12-bit Digital to Analog Converters (x2)
  - SD card interfaces
  - PWM outputs
  - Serial Protocols for connecting external sensors and devices (SPI, UART, I2s, I2C)
  - Dedicated VIN pin for power
  - Micro USB port, and additional USB pins for full OTG-support as host and device

Applications:

- Line level audio devices
- DSP prototyping
- Educational purposes