Daisy Seed

Embedded DSP Platform

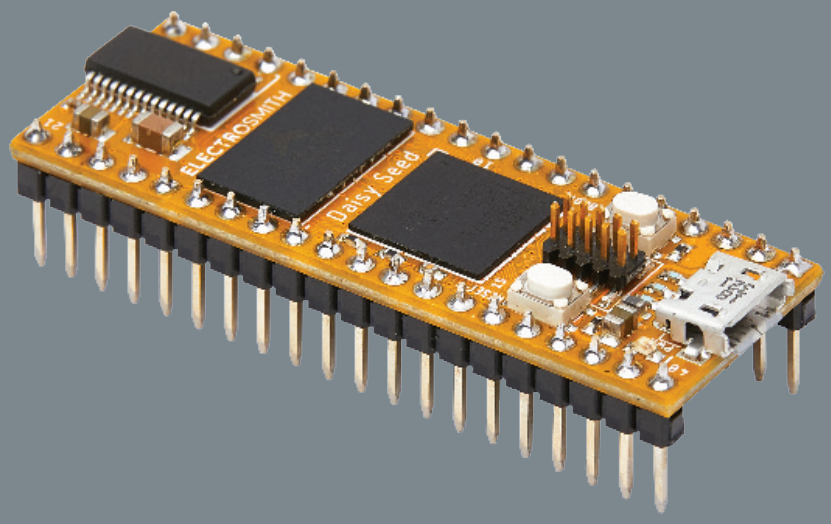

Features:

- Embedded platform for audio applications
- 96kHz / 24-bit audio hardware
- 64MB of SDRAM for up to 10 minute long audio buffers
- ARM Cortex-M7 MCU, running at 480MHz
- 31 total GPIO pins with configurable functionality
- 12-bit Digital to Analog Converters (x2)
- SD card interfaces
- PWM outputs
- Serial Protocols for connecting external sensors and devices (SPI, UART, I2s, I2C)
- Dedicated VIN pin for power
- Micro USB port, and additional USB pins for full OTG-support as host and device

Applications:

- Electronic Instruments (Eurorack modules, synthesizers, samplers, drum machines)
- Effects Units (Desktop Effects, Effects Pedals)
- Audio Playback (Sound Installations, Audio Feedback Devices)

Description:

Daisy is an embedded platform for music. It features everything you need for creating high fidelity audio hardware devices. Just plug in a USB cable and start making sound!

Programming the Daisy is a breeze with support for a number of languages including C++, Arduino, and Max/MSP Gen~. To get started, simply upload an example program over USB, and start tweaking!

Documentation, and examples are hosted on our Github repository for easy download. All firmware that we develop is released for free under a permissive open source license (MIT).

Pinout

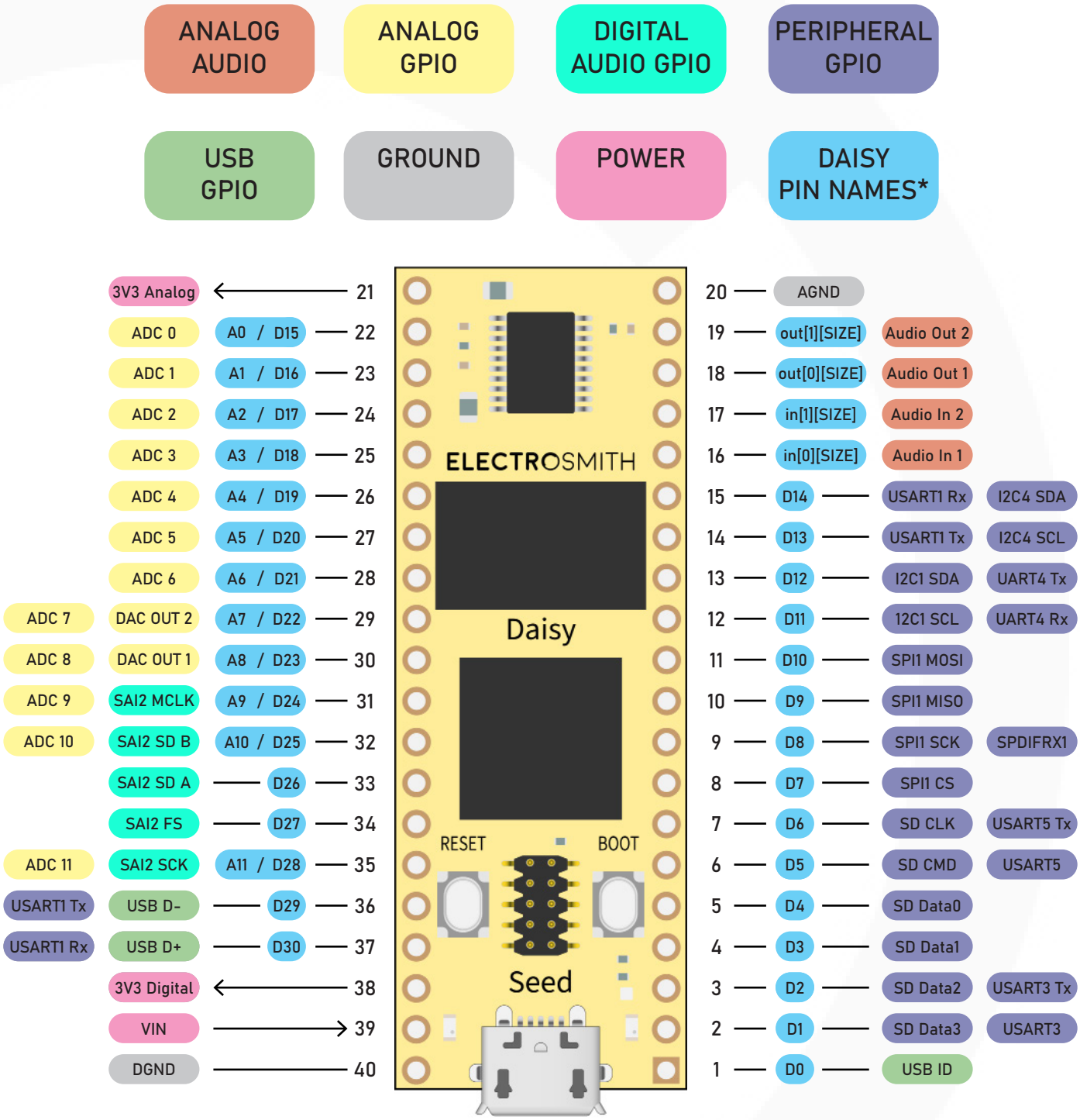

* "D" for Digital GPIO or "A" for Analog I/O, depending on use case.