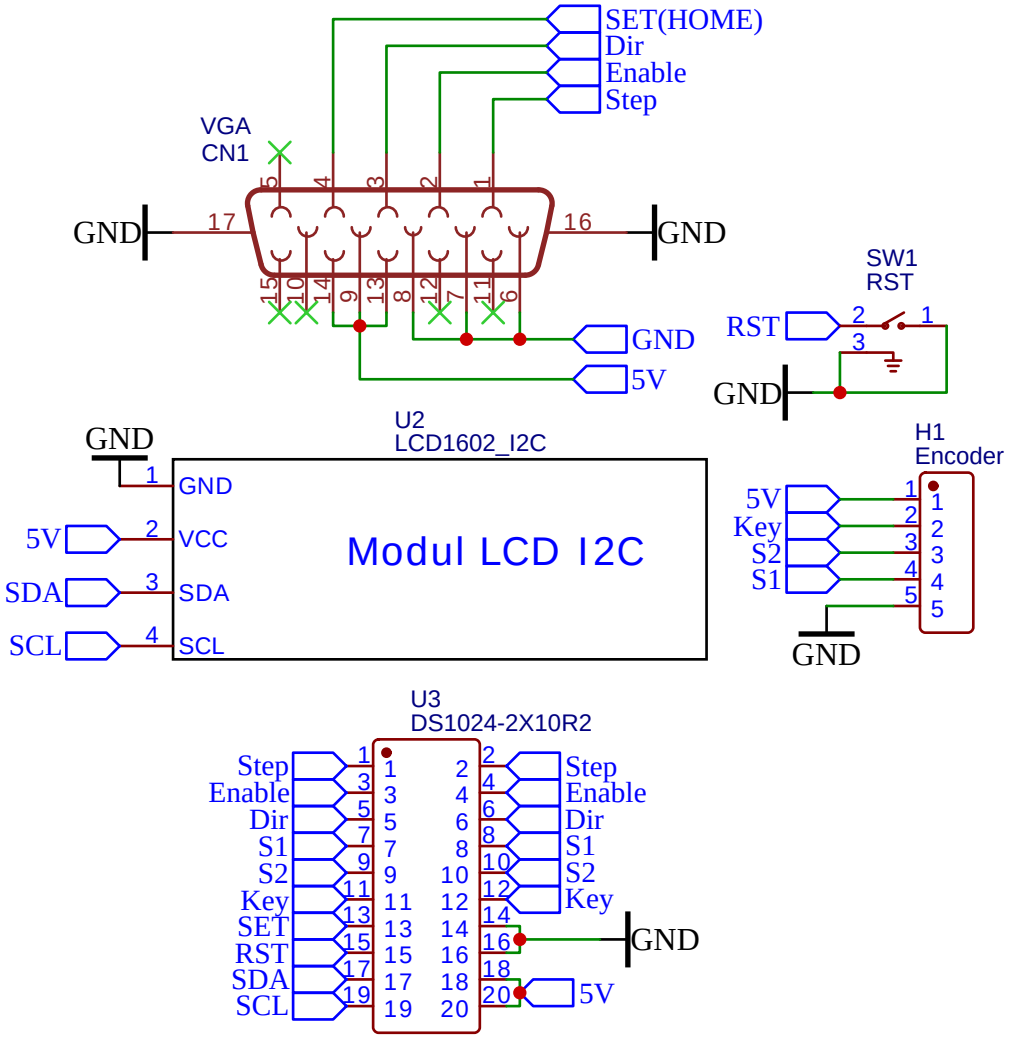


| Pin | Name | Dir | Description |
|---|---|---|---|
| 1 | RED | → | Red Video (75 ohm, 0.7 V p-p) |
| 2 | GREEN | → | Green Video (75 ohm, 0.7 V p-p) |
| 3 | BLUE | → | Blue Video (75 ohm, 0.7 V p-p) |
| 4 | RES | | RESERVED |
| 5 | GND | — | Ground |
| 6 | RGND | — | Red Ground |
| 7 | GGND | — | Green Ground |
| 8 | BGND | — | Blue Ground |
| 9 | KEY | - | Key (No pin) / Optional +5V output from graphics card |
| 10 | SGND | — | Sync Ground |
| 11 | ID0 | ← | Monitor ID Bit 0 (optional) |
| 12 | SDA | ← | $I^2C$ bidirectional data line |
| 13 | HSYNC or CSYNC | → | Horizontal Sync (or Composite Sync) |
| 14 | VSYNC | → | Vertical Sync which works also as data clock |
| 15 | SCL | ← | $I^2C$ data clock in DDC2, Monitor ID3 in DDC1 |