Learning Outcomes

1. Develop and interpret the projection of regular solids like Cone, Pyramid, Prism and Cylinder

Projections of solids

It can be defined as “finding F V and T V of a given solid in a given conditions”

Overview

1. Types of solids
2. Projections of solids in simple position
   a) Axis perpendicular to the HP
   b) Axis perpendicular to the VP
   c) Axis parallel to both the HP and the VP and Perpendicular to PP
3. Projections of solids with axis inclined to one of the reference planes and parallel to the other
   a) Axis inclined to the VP and parallel to the HP
   b) Axis inclined to the HP and parallel to the VP
4. Projections of solids with axis inclined to both HP and VP

Types of Engineering Solids

Solids may be divided into two main groups:

- Polyhedra- 7 Types
- Solids of revolution- 2 Types

Five regular polyhedra

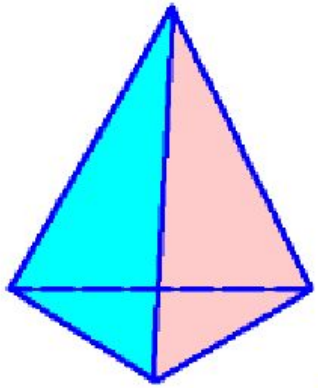

Tetrahedron – four equal equilateral triangular faces

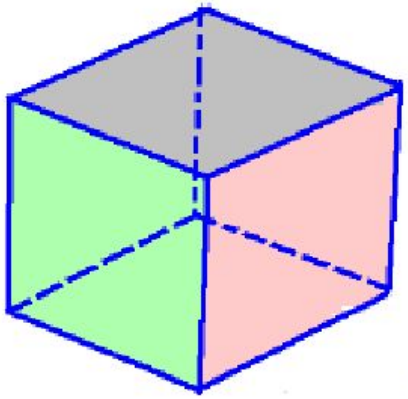

Cube/hexahedron – six equal square faces

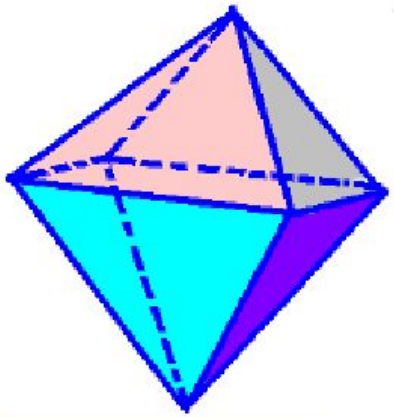

Octahedron– eight equal equilateral triangular faces

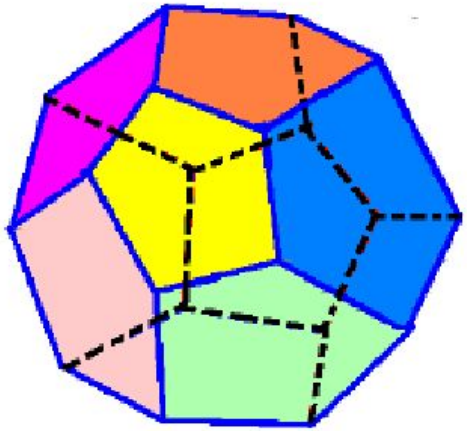

Dodecahedron – twelve equal regular pentagonal faces

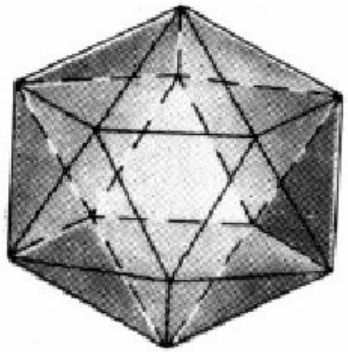

Icosahedron– twenty equal equilateral triangular faces

Polyhedra

A polyhedra is defined as a solid bounded by planes called faces. When all the faces are equal and regular, the polyhedra is said to be regular, otherwise it is a irregular polyhedra.

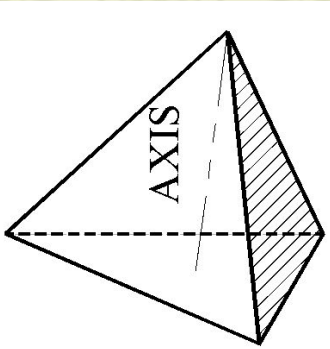

Tetrahedron

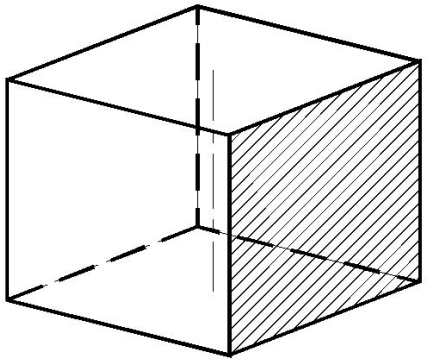

Cube

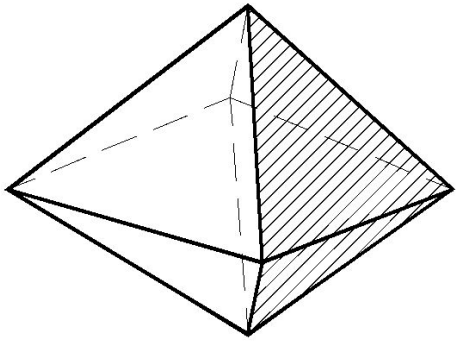

Octahedron

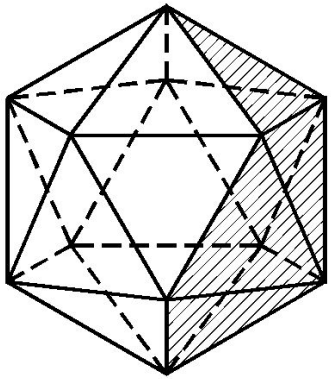

Icosahedron

Prism

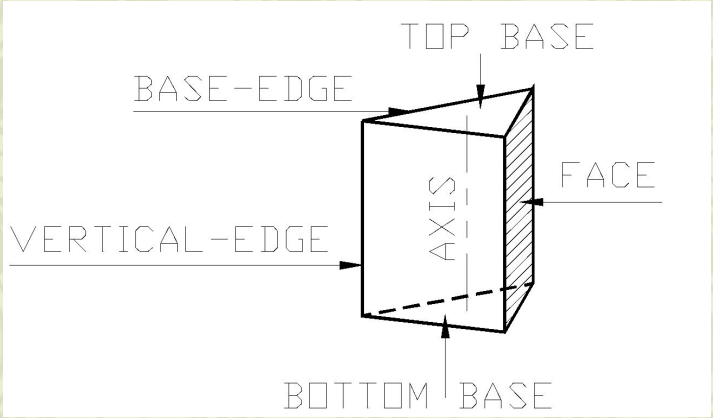

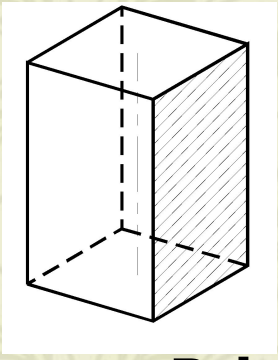

Square Prism

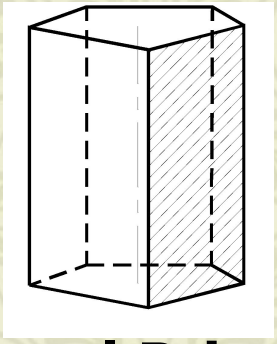

Pentagonal Prism

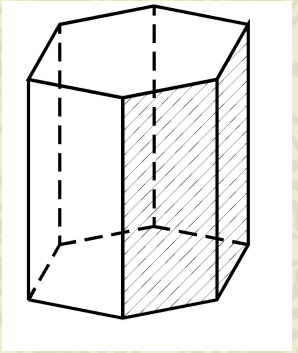

Hexagonal Prism

Terminology of Prism

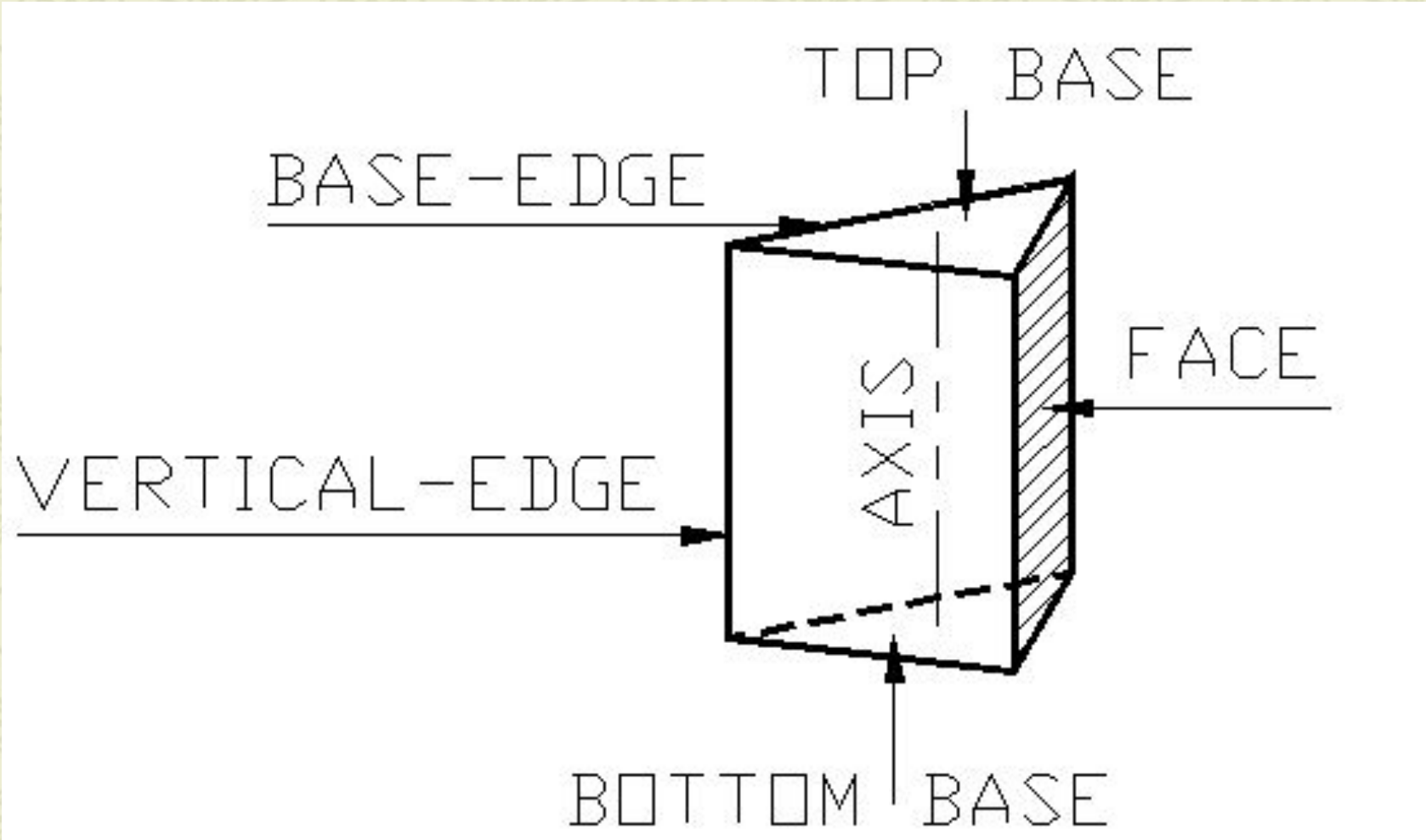

Pyramid

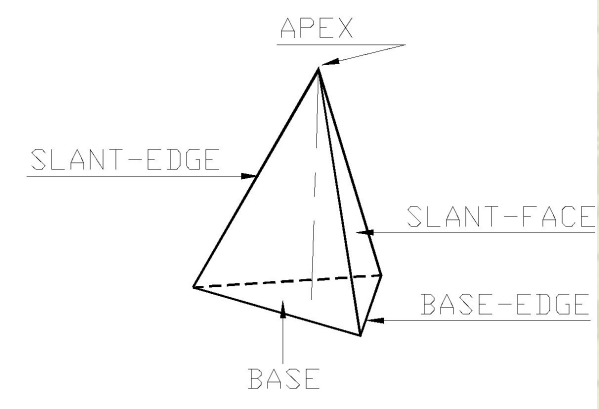

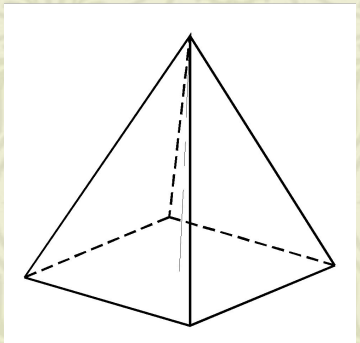

Square Pyramid

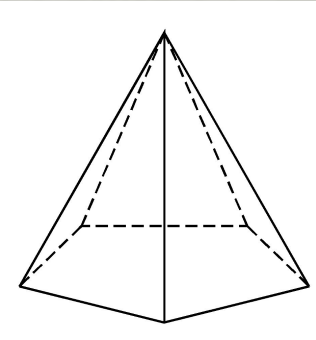

Pentagonal Pyramid

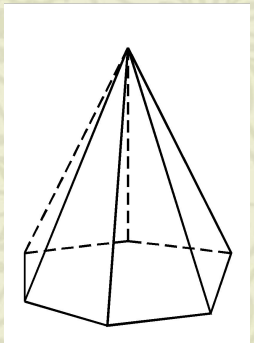

Hexagonal Pyramid

Terminology of Pyramids

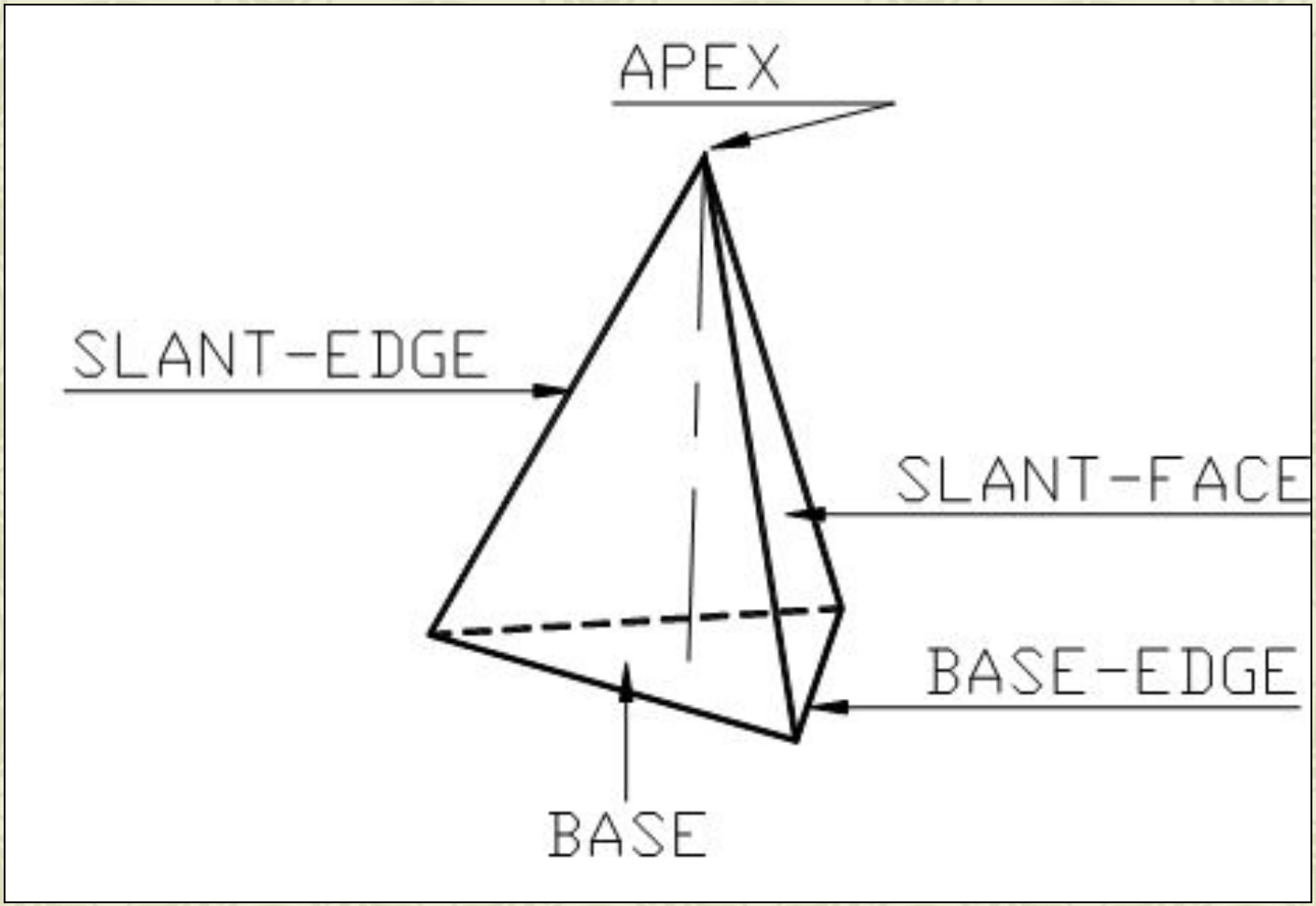

Solids of Revolution

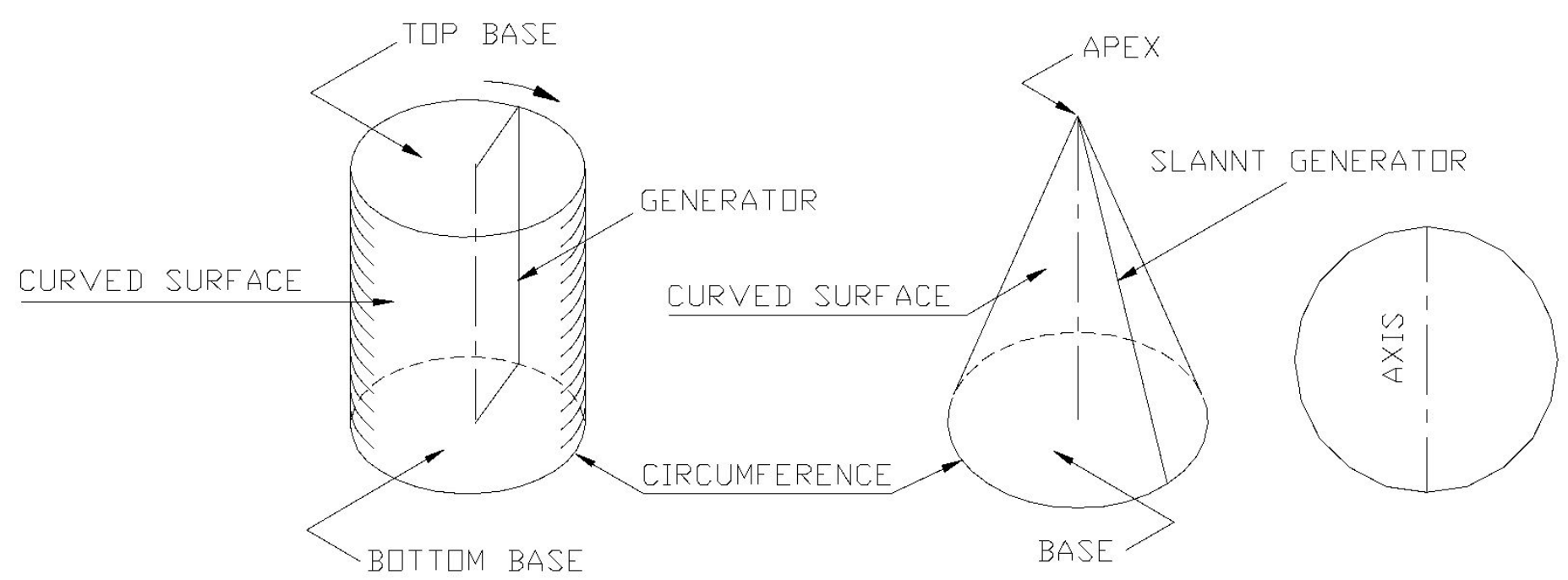

CYLINDER **CONE** **SPHERE**

Frustum of Solids

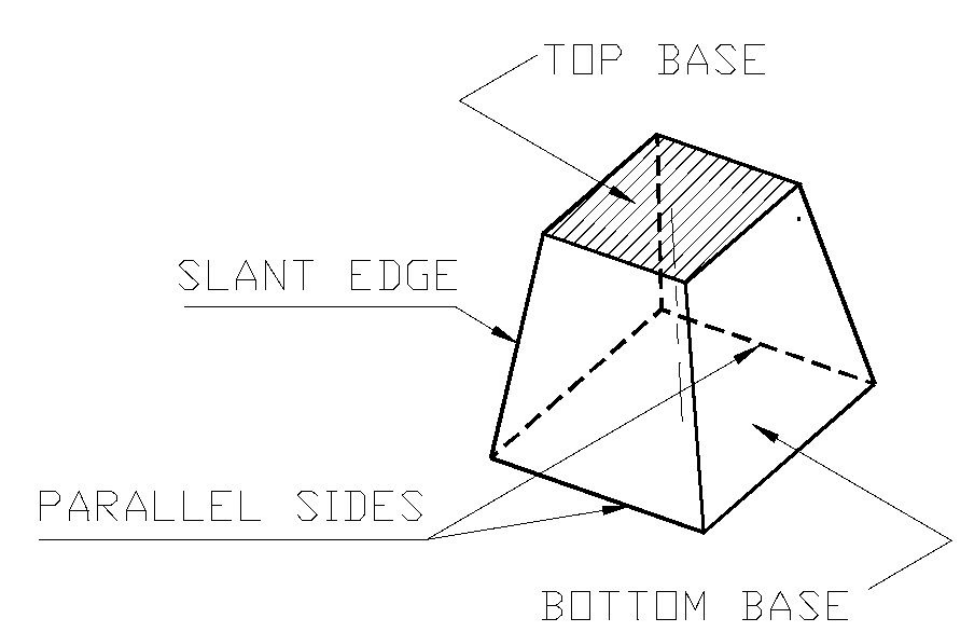

Frustum of Pyramid

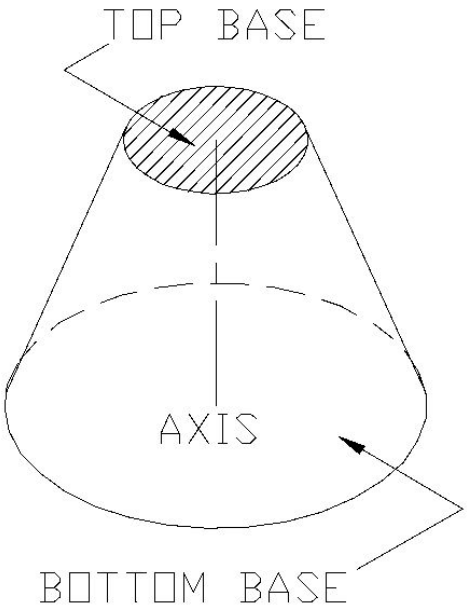

Frustum of Cone

- Exam will be based on prism or cube, pyramid or Tetrahedron, cylinder, cone.

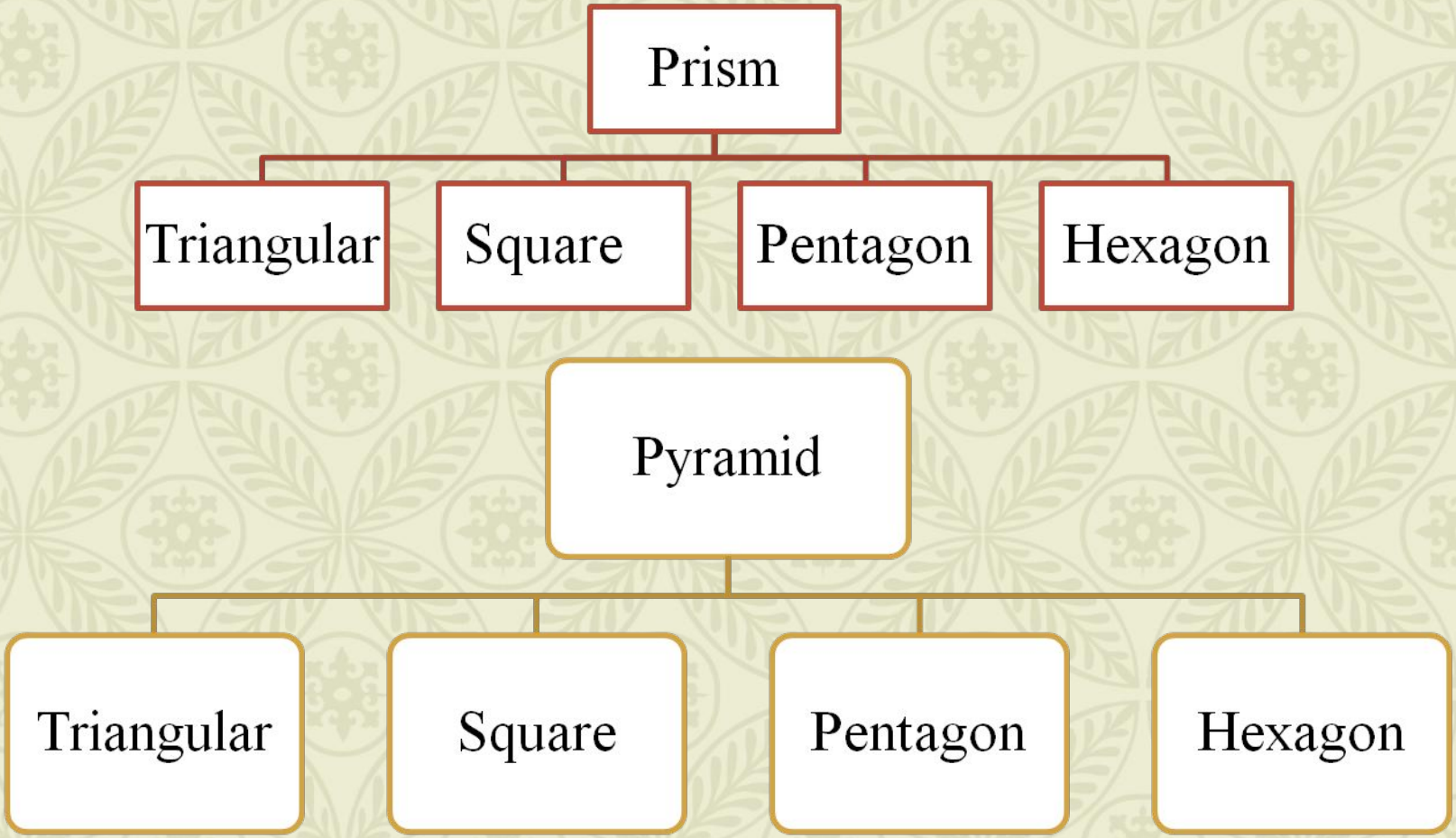

Projection of Solids in Simple Posion

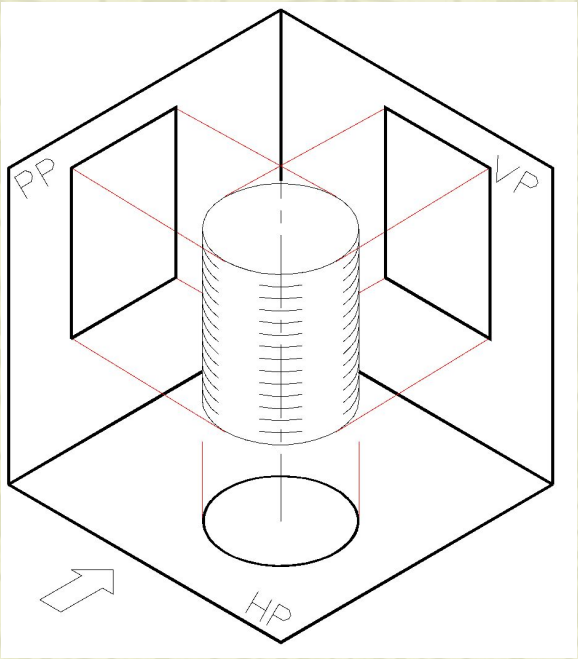

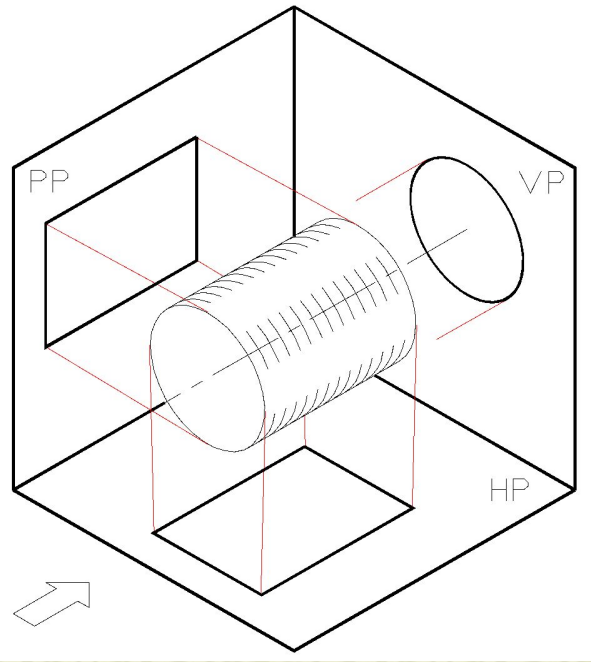

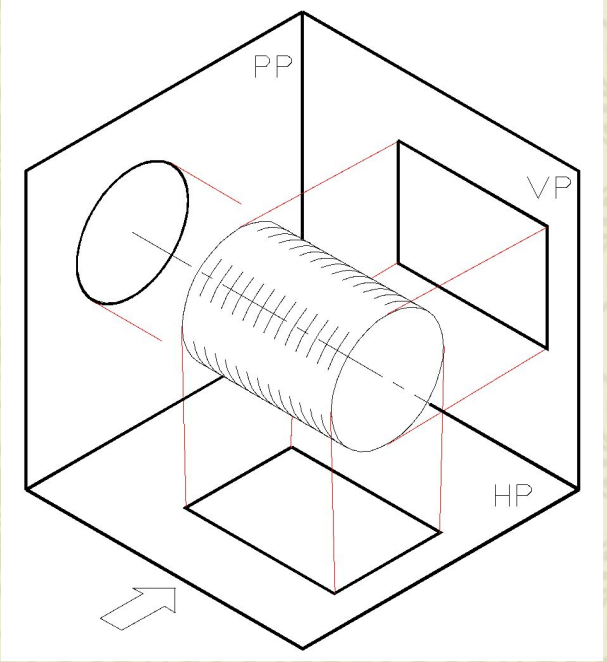

(a) **(b)** **(c)**

Axis perpendicular to (a) HP, (b) VP, (C) PP

Projections of solids in simple position

Illustration no. 1

A triangular prism 40 mm side of base and 60 mm length of axis perpendicular to the VP. Draw the projections if one of the rectangular faces is parallel to the HP and 20 mm above the HP.

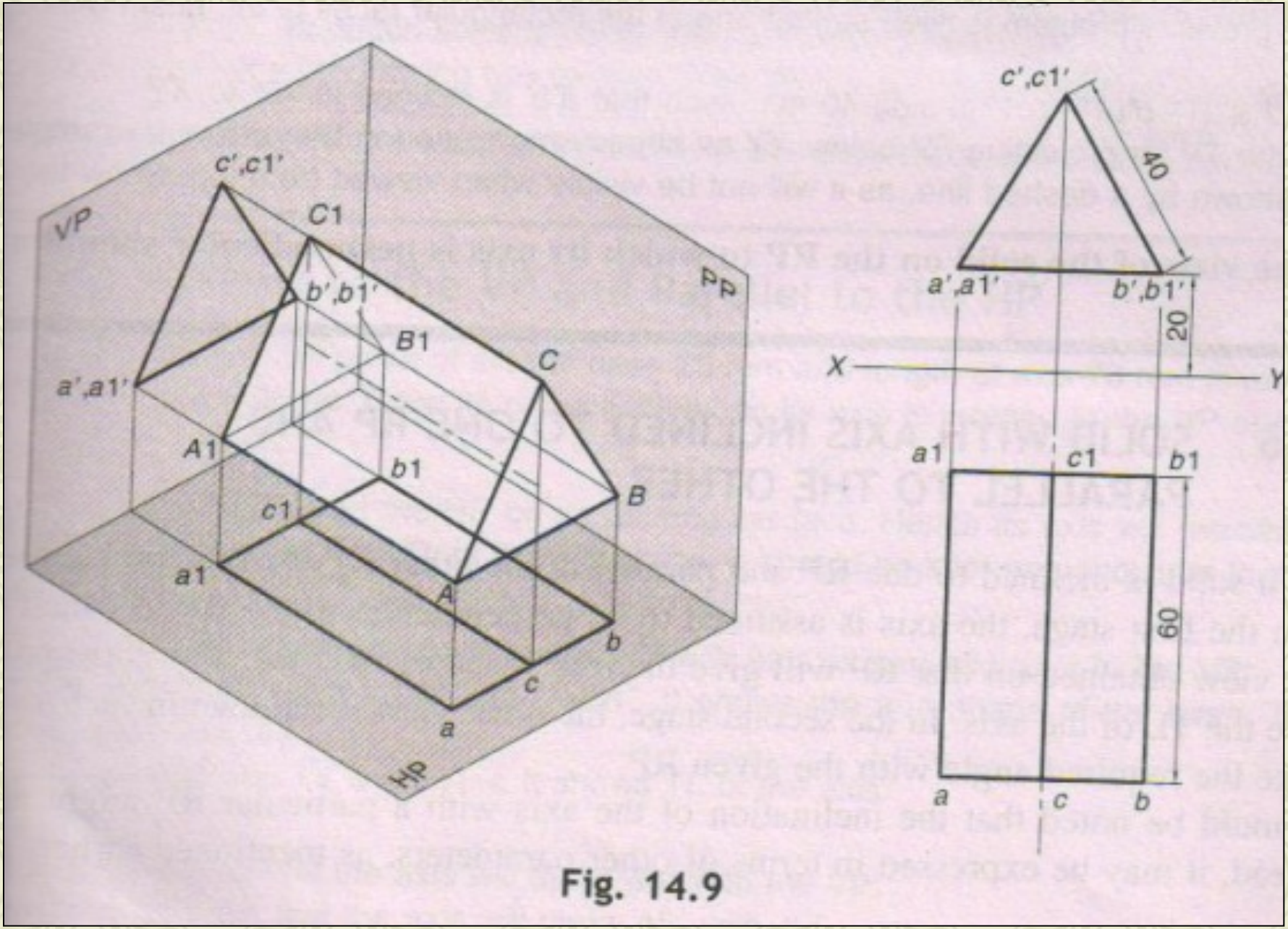
VP
HP
c',c1'
C1
b',b1'
B1
C
a',a1'
A1
b1
B
c1
a1
A
b
c
a
c',c1'
40
a',a1'
b',b1'
20
X
Y
a1
c1
b1
60
a
c
b

Fig. 14.9

Illustration no. 2

A square prism 40 mm side of base and 60 mm length of axis has its axis perpendicular to the HP. Draw the projections if one of the rectangular faces is parallel to the VP and 10 mm above the HP.

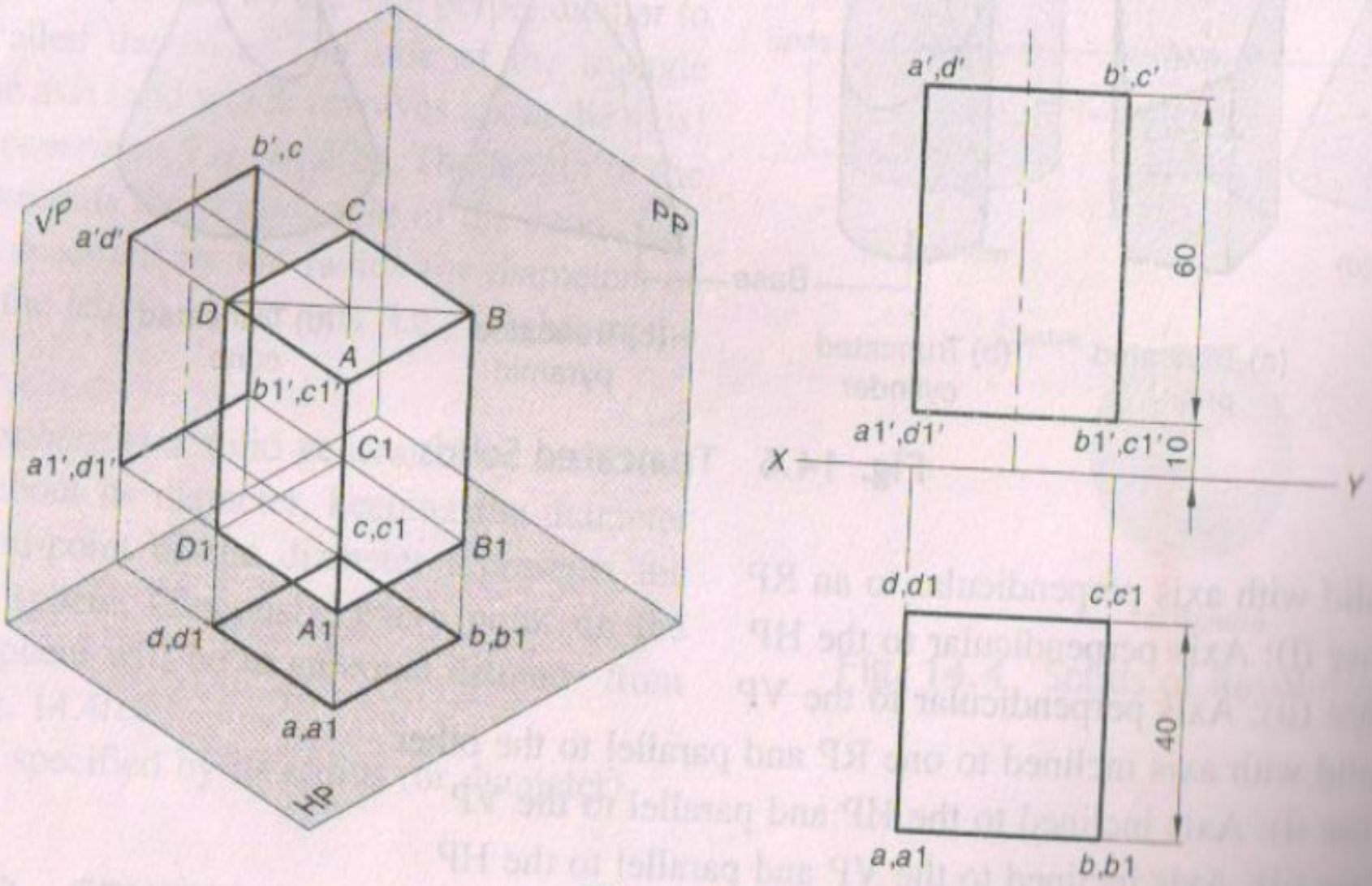
VP
PP
HP
a'd'
b',c
C
D
B
A
b1',c1'
a1',d1'
C1
c,c1
D1
B1
d,d1
A1
b,b1
a,a1
a',d'
b',c'
60
a1',d1'
b1',c1'
10
X
Y
d,d1
c,c1
40
a,a1
b,b1

Fig. 14.7

Illustration no. 3

Draw the projections of (i) a cylinder, base 40 mm diameter and axis 50 mm long and (ii) a cone, base 40 mm diameter and axis 50 mm long resting on the HP on their respective bases.

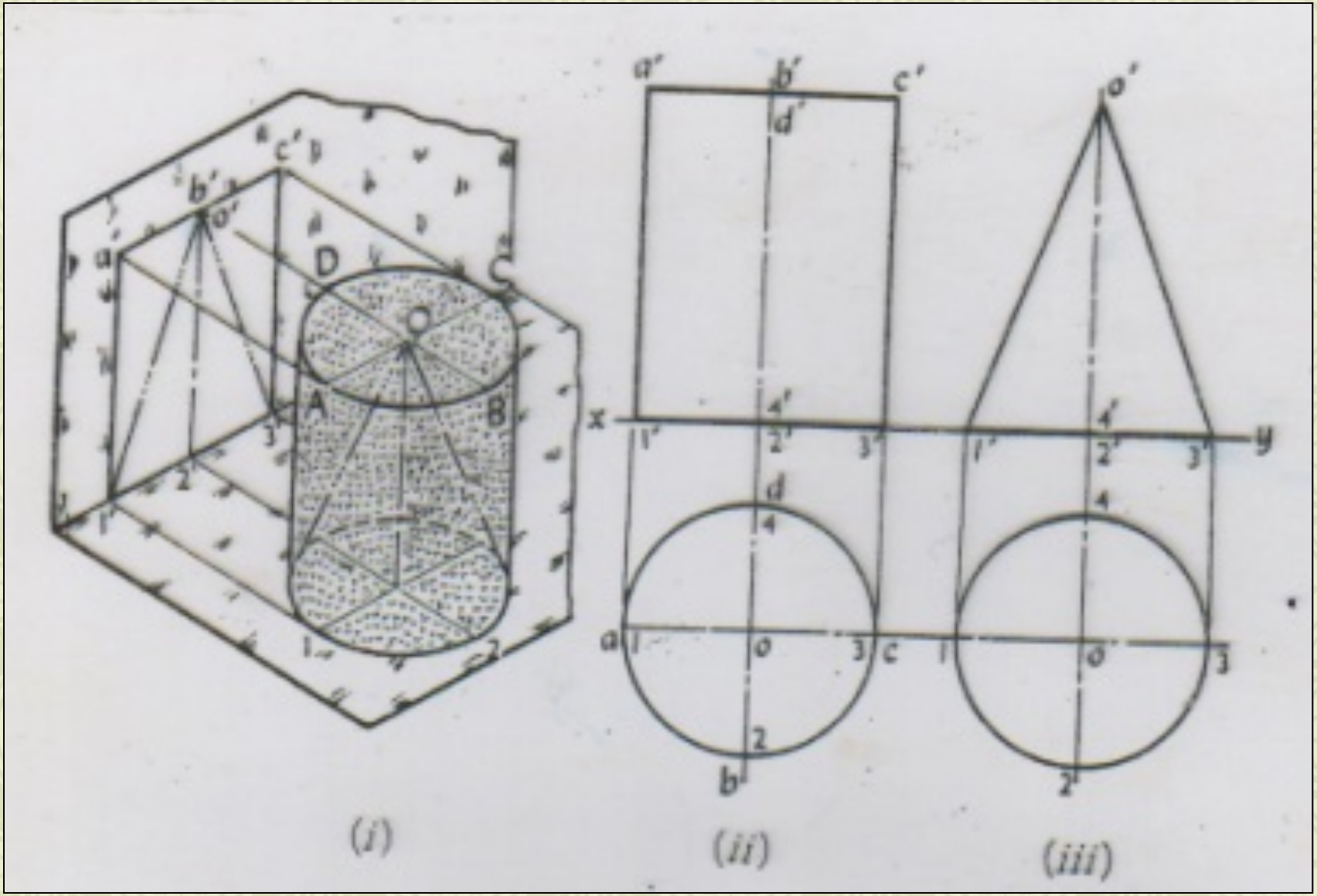
a'
b'
c'
d'
o'
D
C
O
A
B
x
y
1'
2'
3'
4'
a
b
c
d
o
1
2
3
4
(i)
(ii)
(iii)

Illustration no. 4

A Hexagonal prism has one of its rectangular faces parallel to HP. Its axis is perpendicular to the VP and 3.5 cm above the ground. It is having base side is 30 and height is 60.

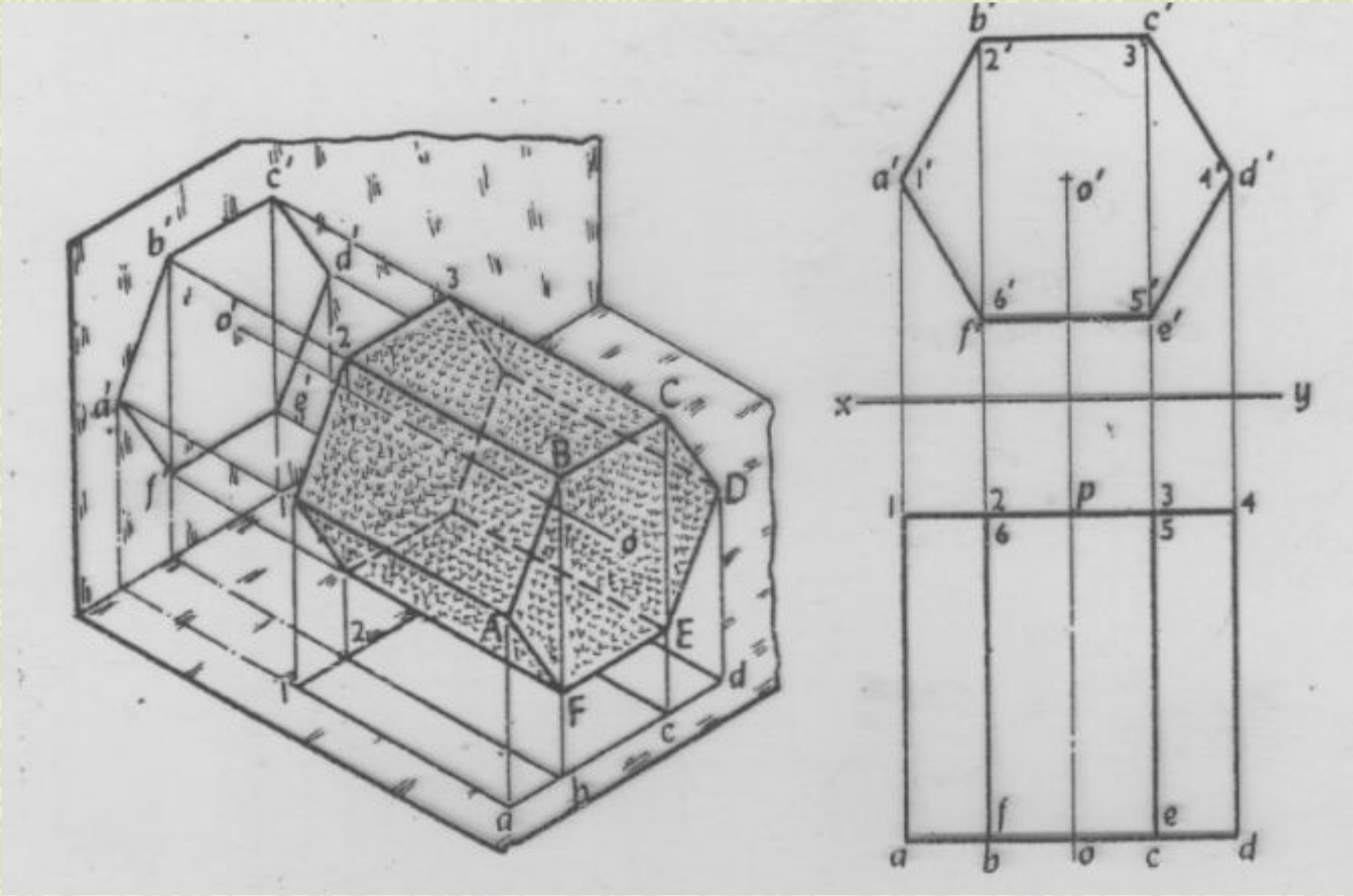

b'
c'
d'
o'
a'
e'
f'
1
2
3
A
B
C
D
E
F
o
a
b
c
d
b'
c'
2'
3
a'
1'
o'
4'
d'
6'
5'
f'
e'
x
y
1
2
p
3
4
6
5
f
e
a
b
o
c
d

Illustration no. 5

A triangular prism 40 mm side of base and 60 mm length of axis perpendicular to the VP. Draw the projections if one of the rectangular faces is inclined at 45º to the HP.

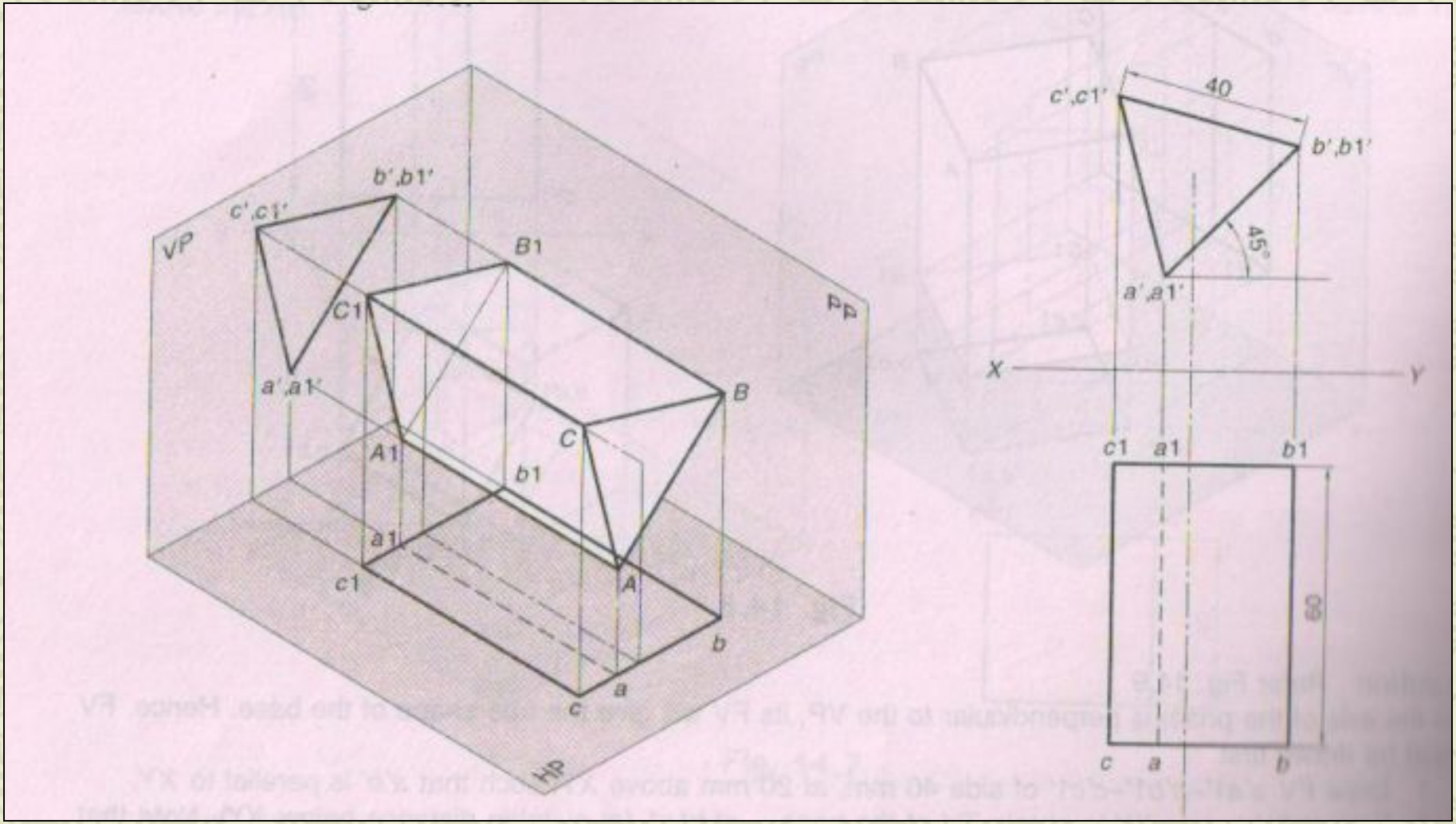
VP
HP
c',c1'
b',b1'
B1
C1
a',a1'
A1
b1
a1
c1
B
C
A
b
a
c
40
45°
X
Y
c1
a1
b1
60
c
a
b

Illustration no. 6

A square prism 40 mm side of base and 60 mm length of axis has its axis perpendicular to the HP. Draw the projections if one of the rectangular faces is at 60º to the VP and 10 mm above the HP.

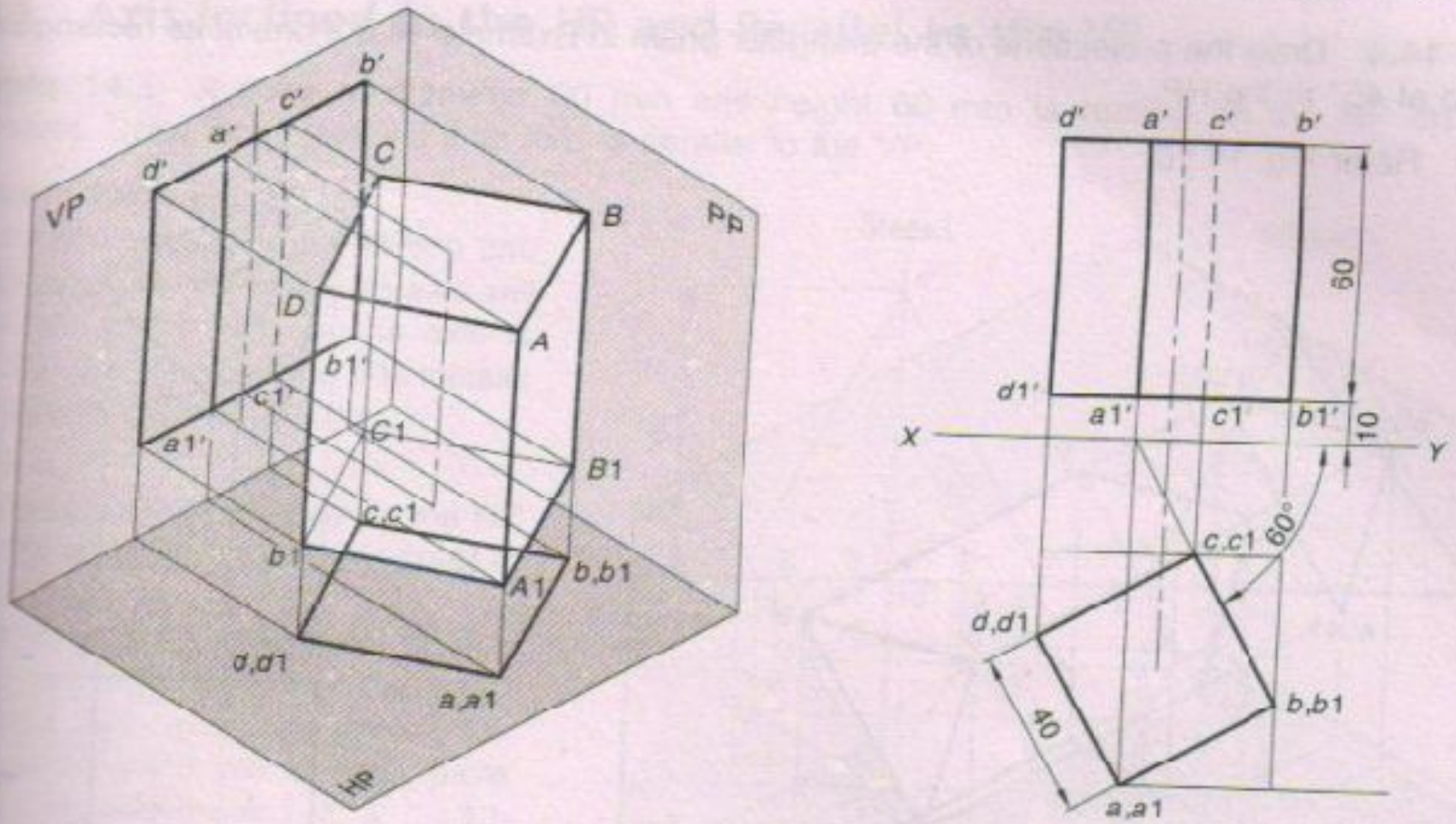
VP
PP
HP
d'
a'
c'
b'
C
B
D
A
b1'
c1'
C1
a1'
B1
c,c1
b
A1
b,b1
d,d1
a,a1
d'
a'
c'
b'
60
d1'
a1'
c1'
b1'
10
X
Y
c,c1
60°
d,d1
40
b,b1
a,a1

Fig. 14.8

Illustration No. 7

A triangular pyramid with 30 mm edges at its base and 35 mm long axis resting on its base with an edge of the base near the V.P, parallel to and 20 mm from the V.P; Draw the projections of the pyramid, if the base is 20 mm above the H.P

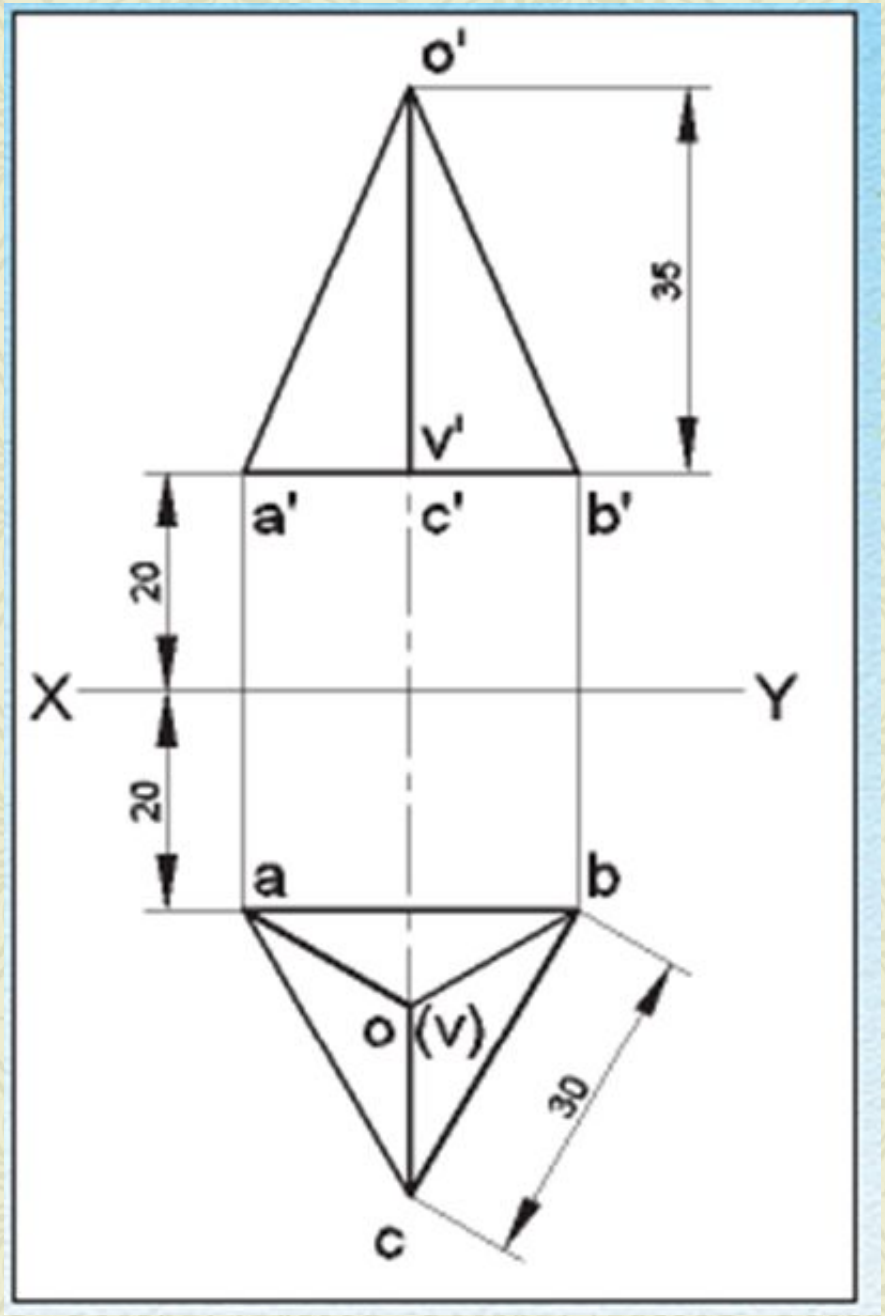
o'
35
v'
a'
c'
b'
20
X
Y
20
a
b
o
(v)
30
c

Illustration No. 7

A square pyramid, base 40 mm side and axis 65 mm long, has its base in the V P. One edge of the base is inclined at 30º the H P and a corner contained by that edge is on the H P draw its projections.

Projections of solids with axis inclined to one of the reference planes and parallel to the other

Projection of Solids

Axis inclined to one plane and parallel to other plane

If a solid has its axis inclined to one reference plane and parallel to other, its projections are drawn in two stages. In the initial stage, the solid is assumed to be in a simple position, i.e. its axis perpendicular to one of the reference planes (HP or VP).

Projection of Solids
Axis inclined to one plane and parallel to other plane

If the axis is inclined to the ground, i.e. the HP, it is assumed to be perpendicular to the HP. In the initial stage, accordingly, the true shape of base of the solid is drawn in the TV.

Projection of Solids
Axis inclined to one plane and parallel to other plane

Similarly, if the axis is to be inclined to the VP, it is assumed to be perpendicular to the VP. In the initial stage, accordingly, true shape of the base of the solid is drawn in the FV.

Projection of Solids

Axis inclined to one plane and parallel to other plane

- **REST CONDITION**

As the solid is tilted it may rest on one of its: base-corner, base-edge, vertical faces, vertical edges (in case of prism); base-corners, apex, base-edges, slant faces, slant edges (in case of pyramid); circumferential point of base, generator (in case of cylinder); circumferential point of base, slant generator, apex (in case of cone).

Model Solution-2
Axis inclined to one plane and parallel to other plane

A square pyramid having base edge 30 mm and height 70 mm is resting on one of its base corner on the ground in such a way that, slant edge associated with that corner is vertical. Draw projections of solid if axis is parallel to the VP.

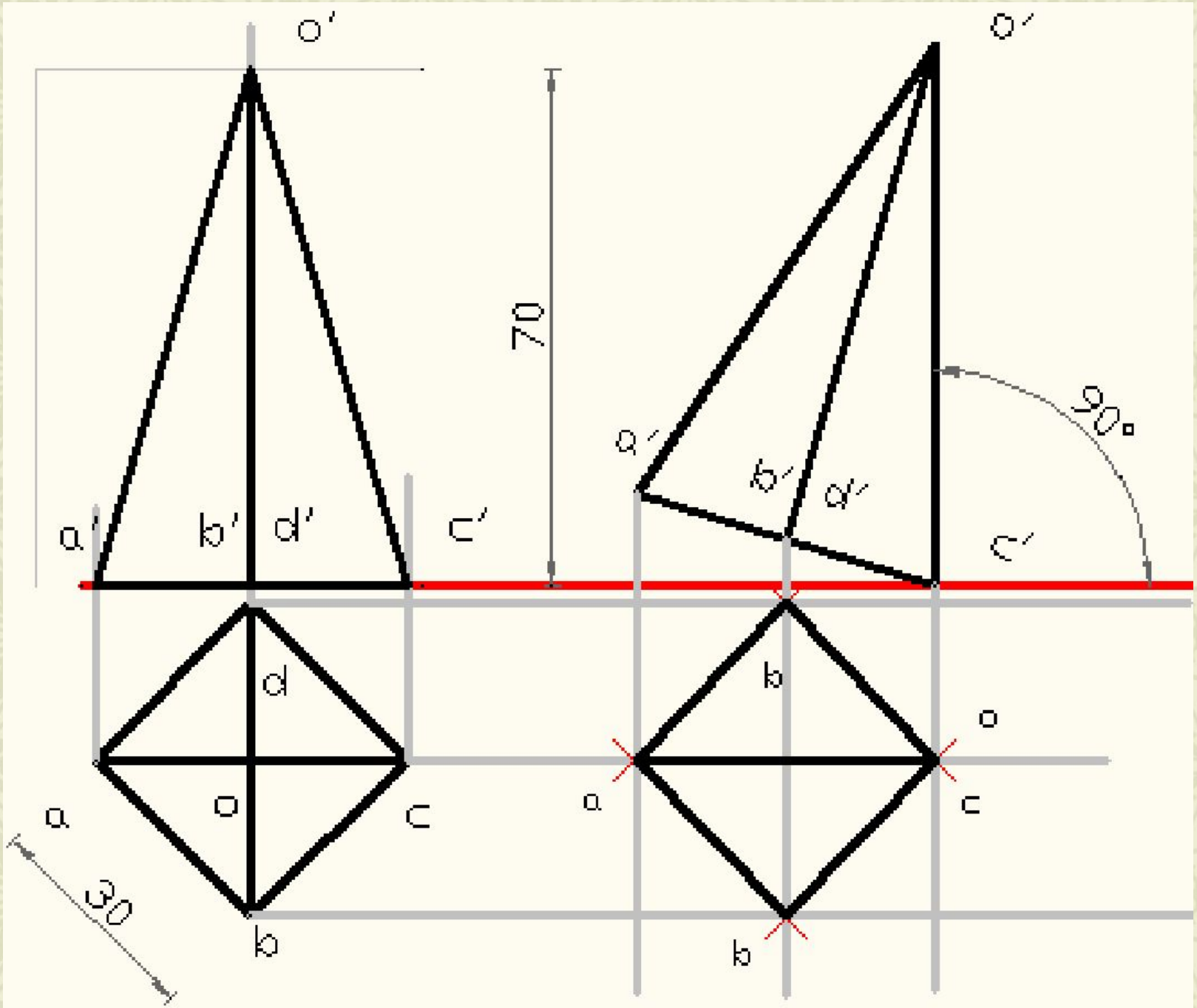
o'
70
a'
b'
d'
c'
o'
a'
b'
d'
c'
90°
d
a
o
c
b
b
o
a
c
b
30

Model Solution-1

Axis inclined to one plane and parallel to other plane

A hexagonal prism having base edge 20 mm and height 60 mm is resting on one of its base edges on the ground in such a way that axis is inclined 70° to the ground and parallel to VP. Draw projections of solid.

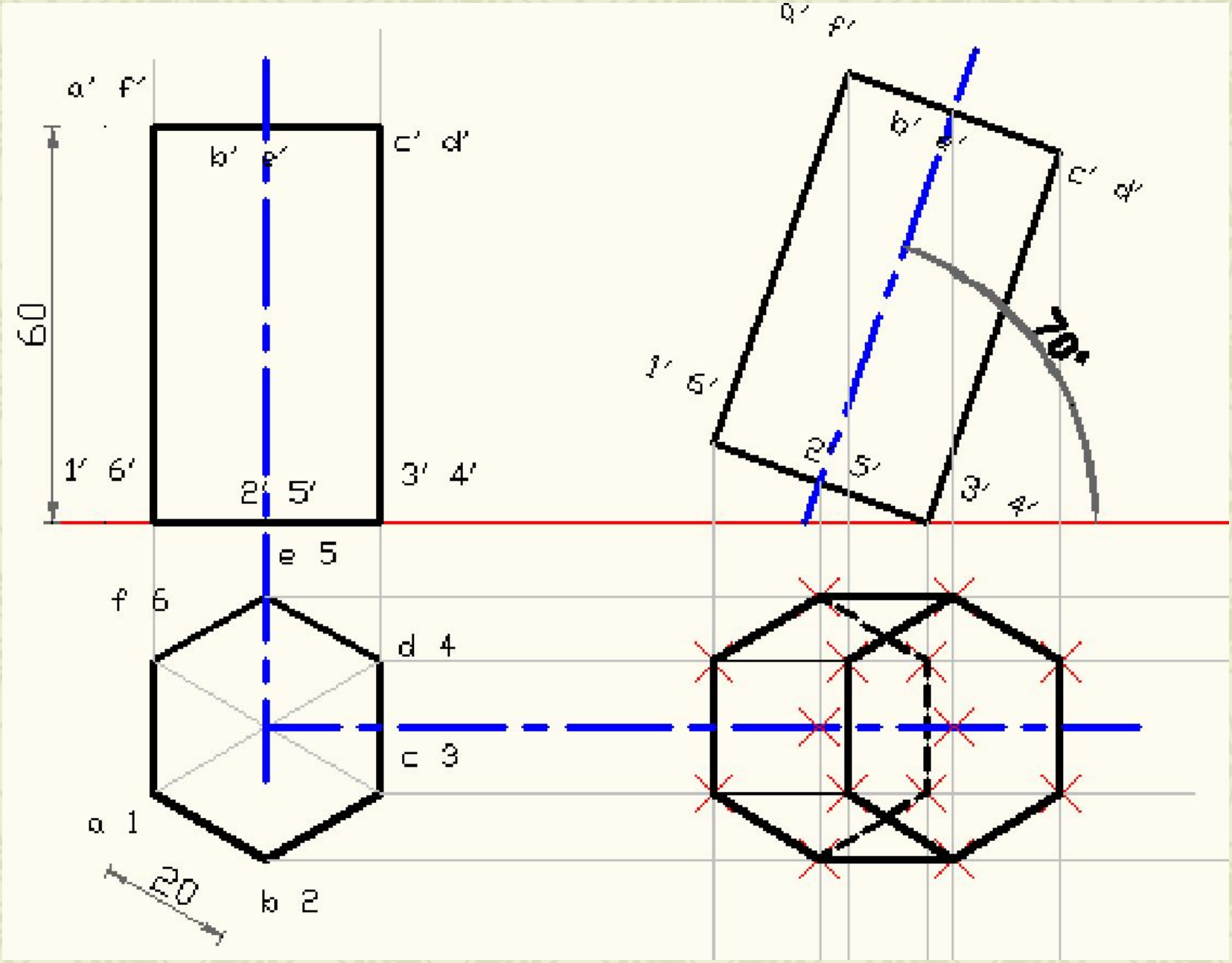
a' f'
b' e'
c' d'
1' 6'
2' 5'
3' 4'
60
e 5
f 6
d 4
c 3
a 1
b 2
20
70°

Model Solution-3
Axis inclined to one plane and parallel to other plane

A cylinder having diameter 50 mm and height 75 mm is resting on its curved surface on the ground in such a way that its base makes angle of 50° to VP and axis is parallel to the ground. Draw projections of solid.

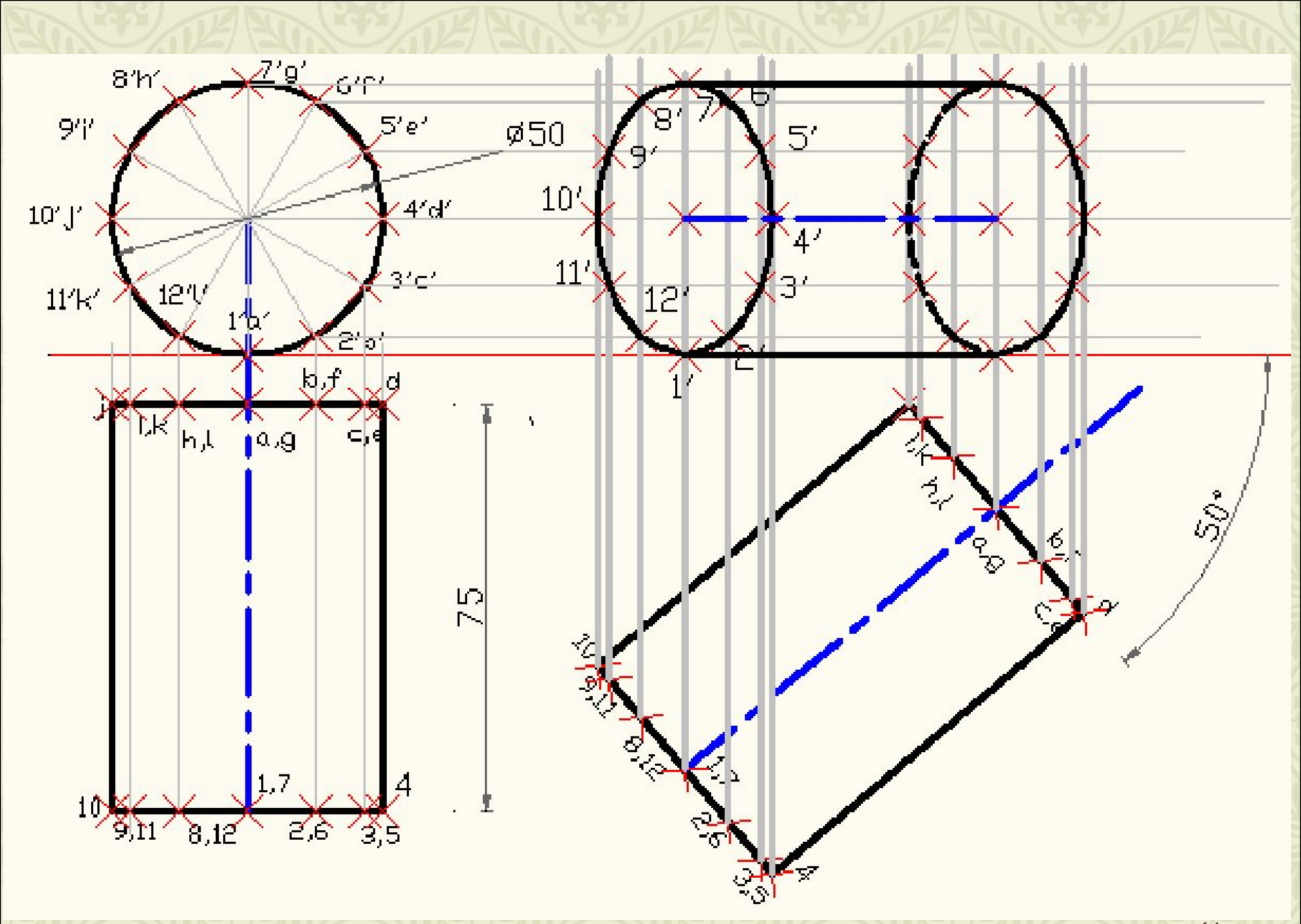
8'h'
7'g'
6'f'
9'i'
5'e'
ø50
10'j'
4'd'
11'k'
12'l'
3'c'
1'a'
2'b'
b,f
d
j
l,k
h,i
a,g
c,e
75
1,7
4
10
9,11
8,12
2,6
3,5
8'
7
6
9'
5'
10'
4'
11'
12'
3'
1'
2'
50°

Model Solution-4
Axis inclined to one plane and parallel to other plane

A cylinder having diameter 50 mm and height 80 mm is resting on its circumferential point of base with axis parallel to VP. Draw projections of solid if axis makes angle 45° to the ground.

Model Solution-6

Axis inclined to one plane and parallel to other plane

A cone having base diameter 50 mm and height 80 mm is resting on its circumferential point of base with axis parallel to VP. Draw projections of solid if axis makes angle 40° to the ground.

Model Solution-5

Axis inclined to one plane and parallel to other plane

A cone having base diameter 40 mm and height 60 mm is resting on circumferential point of base on the ground with axis inclined 50º to VP and parallel to the ground. Draw projections of solid if apex is towards observer.

Projections of solids with axis inclined to both HP and VP

Illustration No. 1

A square prism, base 40 mm side and height 65 mm, has its axis inclined at 45º to the H P and has an edge of its base, on the H P and inclined at 30º to the V P. Draw its Projections.

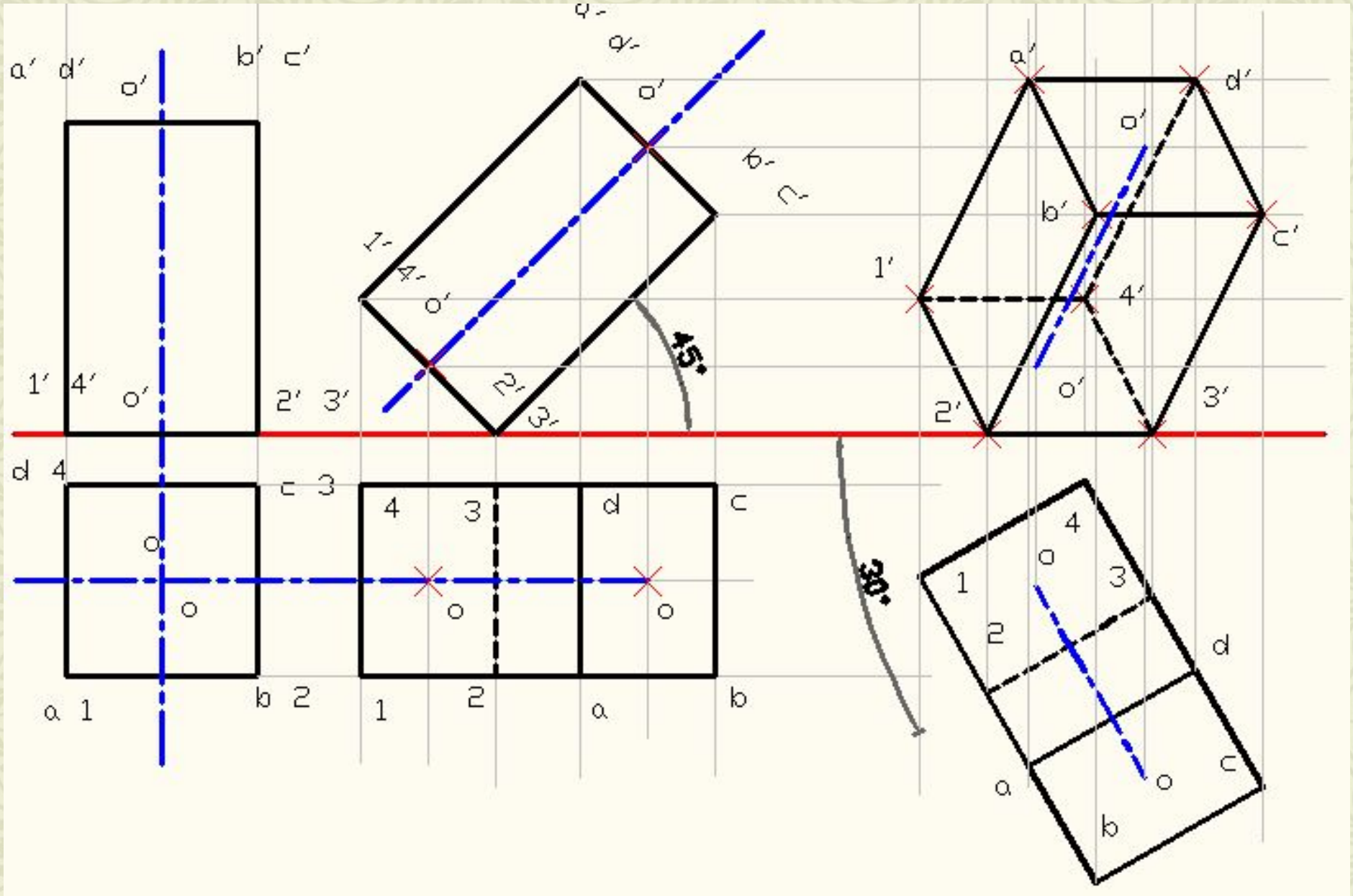
a′ d′
b′ c′
o′
1′ 4′
o′
2′ 3′
d 4
c 3
o
o
a 1
b 2
4
3
d
c
o
o
1
2
a
b
45°
30°
a′
d′
o′
b′
c′
1′
4′
o′
2′
3′
4
o
1
3
2
d
a
o
c
b

Other conditions

In all 3 stage problems of Prism, the 3 conditions are always given,

a) w r t HP

i) vertical face will make some angle

ii) vertical edge will make some angle

iii) axis will make some angle

iv) base will make some angle

Other conditions

b) w r t VP

i) base edge will make some angle

ii) axis will make some angle

iii) rectangular face will make some angle

iv) T V will make some angle

c) resting conditions

i) base edge

ii) base corner

iii) suspended at top corner by string

iv) rectangular face

v) long edge

Illustration No. 4

Draw the projections of a cone, base 45 mm diameter and axis 50 mm long, when it is resting on the ground on a point on its base circle with (a) the axis making an angle of 30º with the H P and 45º with the VP (b) the axis making an angle of 30º with the HP and its TV making 45º with the VP.

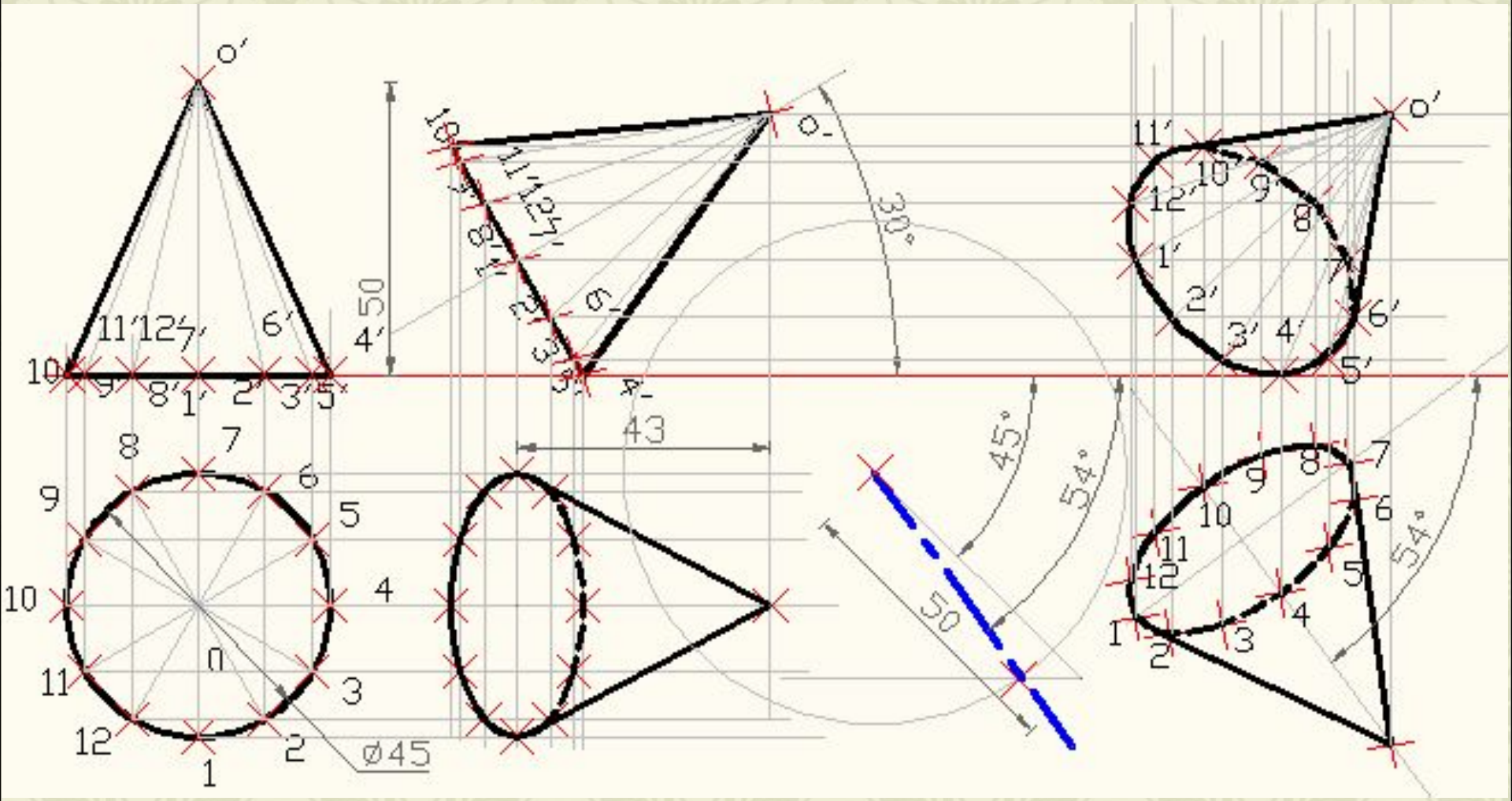

o′
11′12′7′
6′
10
9′
8′1′
2′
3′5′
4′
50
43
30°
45°
54°
50
ø45

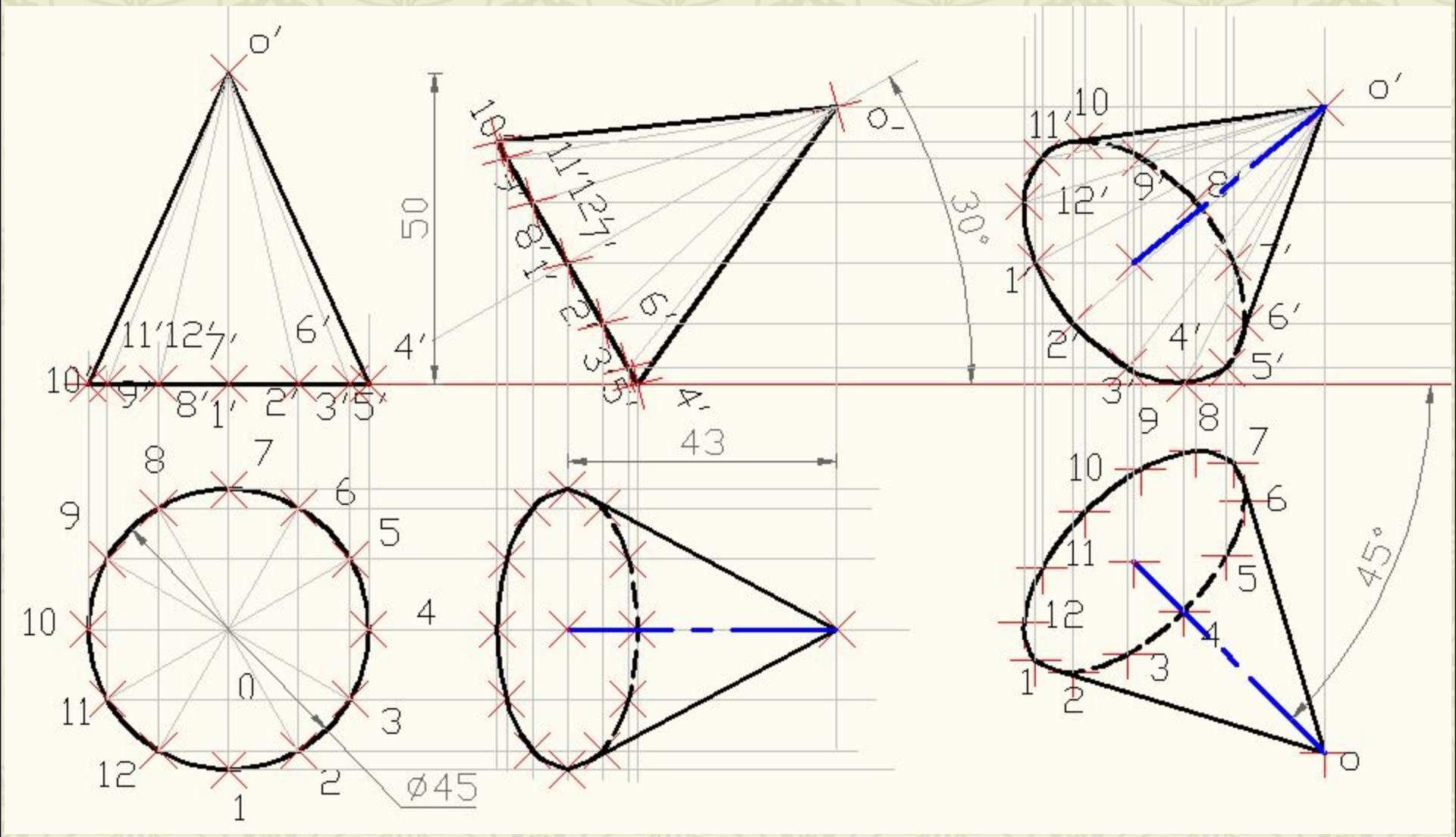
50
4′
30°
43
45°
ø45

Other conditions

In all 3 stage problems of cone, the 3 conditions are always given, as follows,

a) w r t HP

1. slant generators will make some angle
2. axis will make some angle
3. base will make some angle
4. Apex is placed at some distance from HP.

Other conditions

b) w r t VP

1. base edge will make some angle
2. axis will make some angle
3. T V will make some angle
4. slant generators will make some angle

c) resting conditions

1. circumferential point of base
2. suspended at top corner by string
3. slant generator
4. apex

Illustration No. 2

A Pentagonal pyramid of base 20 mm and height 50 mm has one of its triangular faces in the VP and edge of the base contained by that face makes an angle of 30º with the HP. Draw its projections.

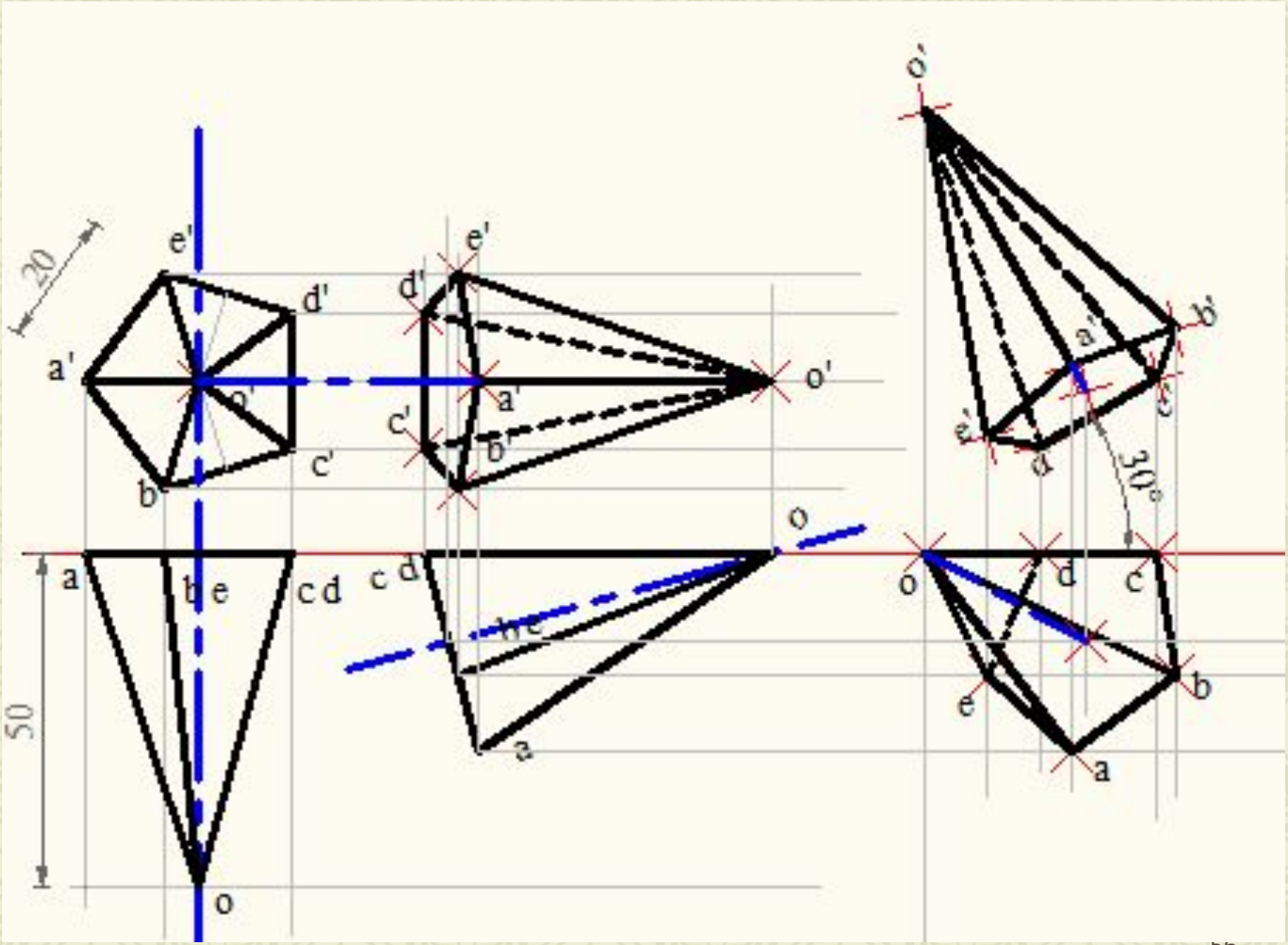
20
e'
d'
a'
o'
c'
b'
50
a
b e
c d
o
30°

Other conditions

In all 3 stage problems of Pyramid the 3 conditions are always given, as follows,

a) w r t HP

i) Triangular face will make some angle

ii) vertical slant edge will make some angle

iii) axis will make some angle

iv) base will make some angle

v) Apex is placed at some height from HP

Other conditions

b) w r t VP

i) base edge will make some angle

ii) axis will make some angle

iii) triangular face will make some angle

iv) T V will make some angle

c) resting conditions

i) base edge

ii) base corner

iii) suspended by string

iv) Triangular (slant) face

v) slant edge

vi) apex

Illustration No. 5

A pentagonal prism is resting on one of the corners of its base on the HP. The longer edge containing that corner is inclined at 45º to the HP. The axis of the prism makes an angle of 30º to VP. Draw the projections of the solid. Take base side= 30 mm and H=60 mm.

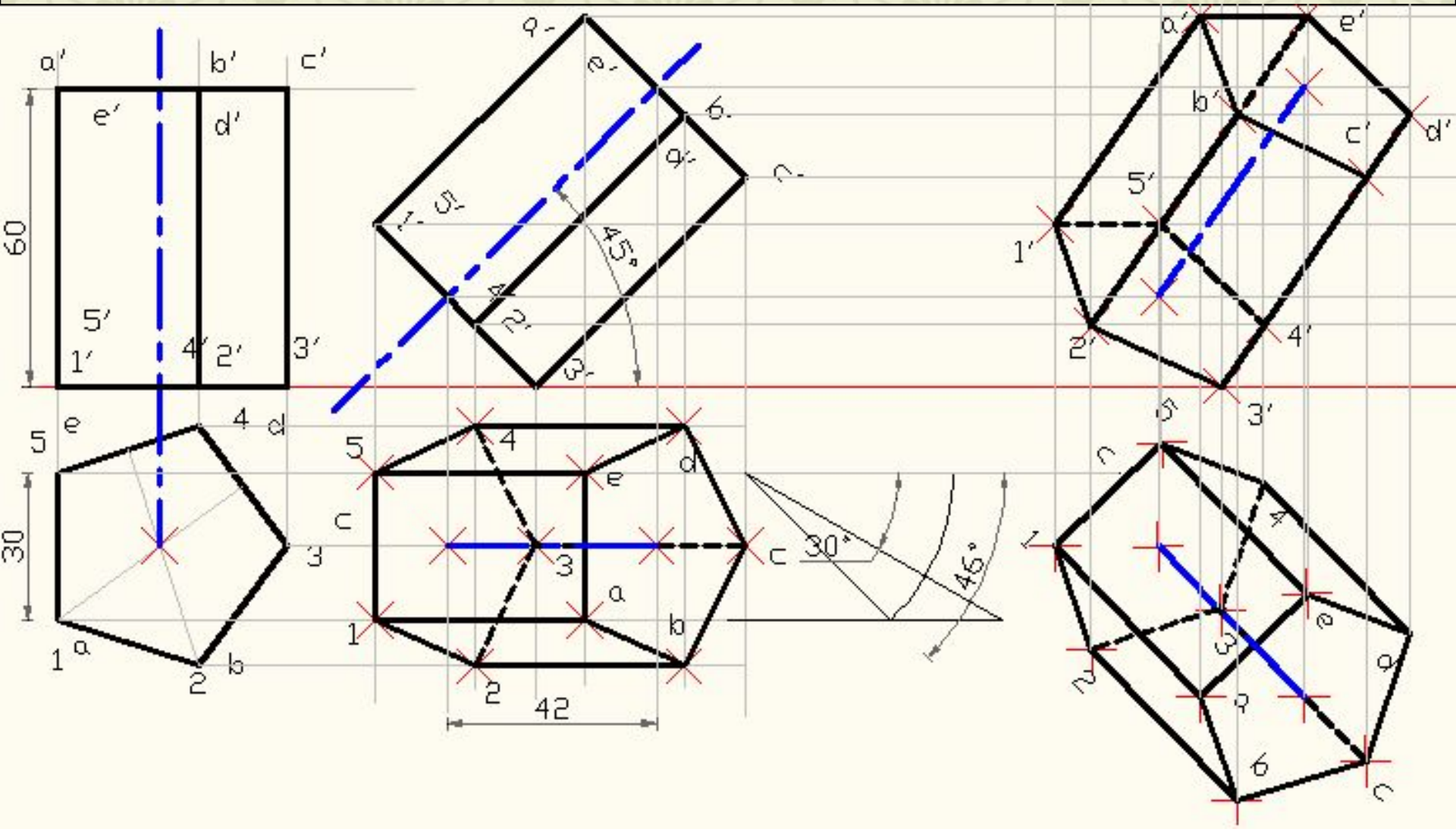
a′
b′
c′
e′
d′
5′
1′
4′
2′
3′
60
30
42
45°
30°
46°

H W Illustration no. 1

A triangular prism of the base side 45 mm and length of axis 75 mm has its edge of base on the HP and inclined at 50º to the VP. The face through that edge makes angle of 30º to the HP. Draw the projections of the prism.

Illustration No.3

A square pyramid of 50 mm side of the base and 50 mm length of axis is resting on one of its triangular faces on the HP having a slant edge containing that face parallel to the VP. Draw the projections of the pyramid.

Illustration No. 6

A regular pentagonal pyramid, base 30 mm side and height 80 mm rests on one edge of its base on the ground so that the highest point in the base is 30 mm above the ground. Draw its projection when the axis is parallel to the VP.

Draw another FV on a reference line inclined at 30º to the edge on which it is resting so that the base is visible.

Illustration No. 7

A regular pentagonal prism lies with its axis inclined at 60° to the HP and 30° to the VP. The prism is 60 mm long and has a face width of 25 mm. the nearest corner is 10 mm away from V P and farthest shorter edge is 100 mm from the HP. Draw the Projections of the Solid.

Illustration no. 10

A pentagonal pyramid of 35 mm base edge and 70 mm height is resting on the HP with one of its triangular surface perpendicular to the HP, and parallel and nearer to VP. Draw its projections.

Illustration No. 8

A triangular pyramid having base side 45 mm and length 75 mm is kept in the first quadrant in such a way that its FV shows the true shape of a lateral face. The base edge of the lateral face is parallel to HRP. Draw the two views of the solid. Measure the slant height of the pyramid.

Illustration No. 9

A square prism, side of the base 40 mm and length of the axis 70 mm, has an edge of its base in the VP. The axis is making an angle of 55º with the VP and its elevation is making 45º with XY. Draw the projections of the solid.

Illustration no. 10

A pentagonal pyramid of 50 mm side of the base and 85 mm height of the axis is freely suspended by a string from one of its corners of base. Draw the projections of the pentagonal pyramid when its axis makes an angle of 30º with the VP.

Illustration No. 11

A cone of the base diameter 50 mm and 70 mm long axis is freely suspended from a point on the rim of its base. Draw the FV and the TV when the plane containing its axis is perpendicular to the HP and makes an angle of 35º with the VP.

Illustration No. 12

A pentagonal pyramid with base edges 40 mm axis 75 mm has one of its corners of the base on the HP with the triangular face opposite to it parallel to the HP. Draw the projections of the pyramid if the top view of its axis is perpendicular to the VP.