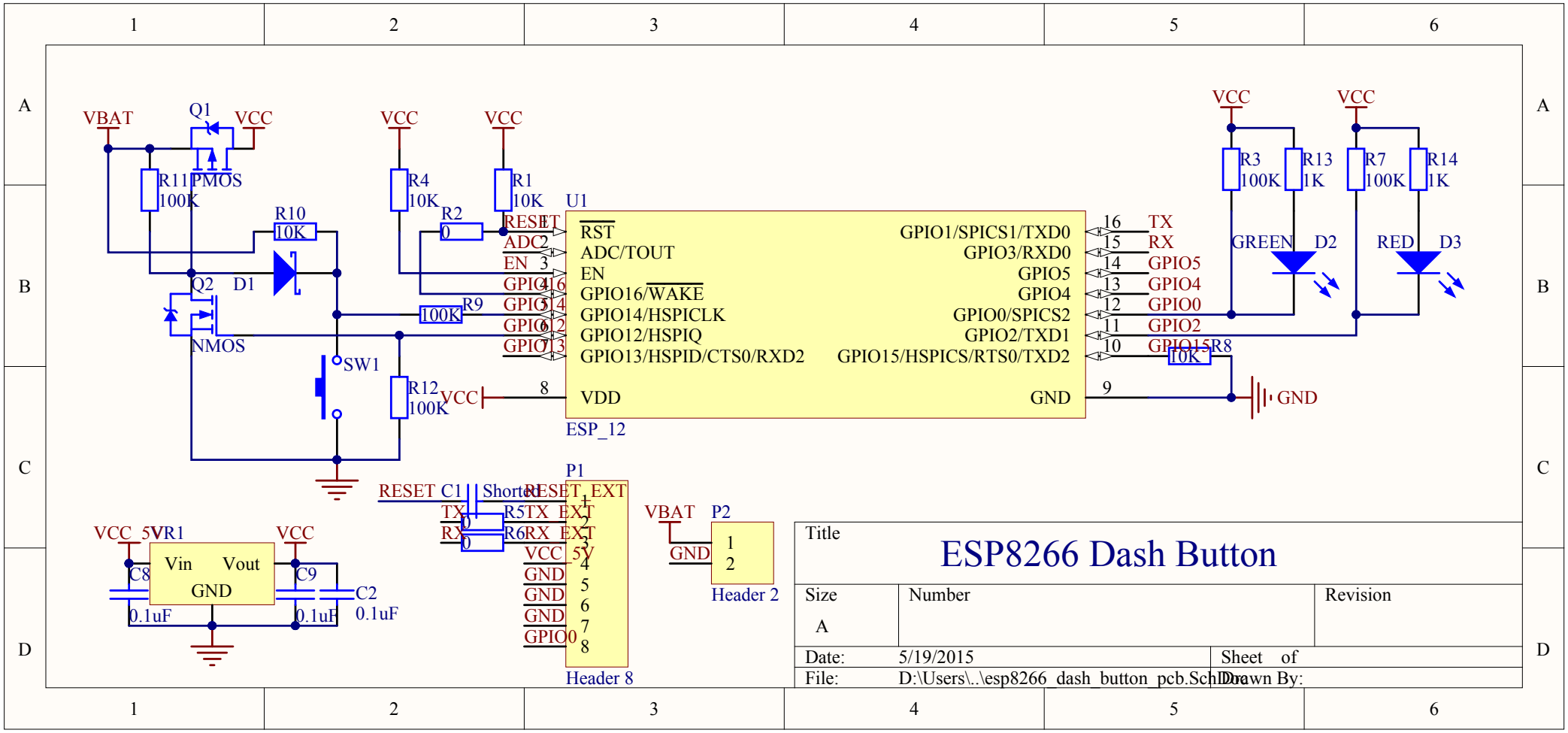
VBAT
Q1
PMOS
VCC
R11
100K
R10
10K
Q2
D1
NMOS
SW1
R12
100K
R4
10K
R2
0
R1
10K
R9
100K
U1
RST
ADC/TOUT
EN
GPIO16/WAKE
GPIO14/HSPICLK
GPIO12/HSPIQ
GPIO13/HSPID/CTS0/RXD2
VDD
GPIO1/SPICS1/TXD0
GPIO3/RXD0
GPIO5
GPIO4
GPIO0/SPICS2
GPIO2/TXD1
GPIO15/HSPICS/RTS0/TXD2
GND
ESP_12
TX
RX
GPIO5
GPIO4
GPIO0
GPIO2
GPIO15
R8
10K
GND
R3
100K
R13
1K
GREEN
D2
R7
100K
R14
1K
RED
D3
RESET
C1
Shorted
TX
R5
0
RX
R6
0
P1
RESET_EXT
TX_EXT
RX_EXT
VCC_5V
GND
GND
GND
GPIO0
Header 8
VBAT
P2
GND
Header 2
VCC_5V
R1
Vin
Vout
GND
C8
0.1uF
C9
0.1uF
C2
0.1uF
Title
ESP8266 Dash Button
Size
A
Number
Revision
Date:
5/19/2015
Sheet of
File:
D:\Users\..\esp8266_dash_button_pcb.SchDoc
Drawn By:

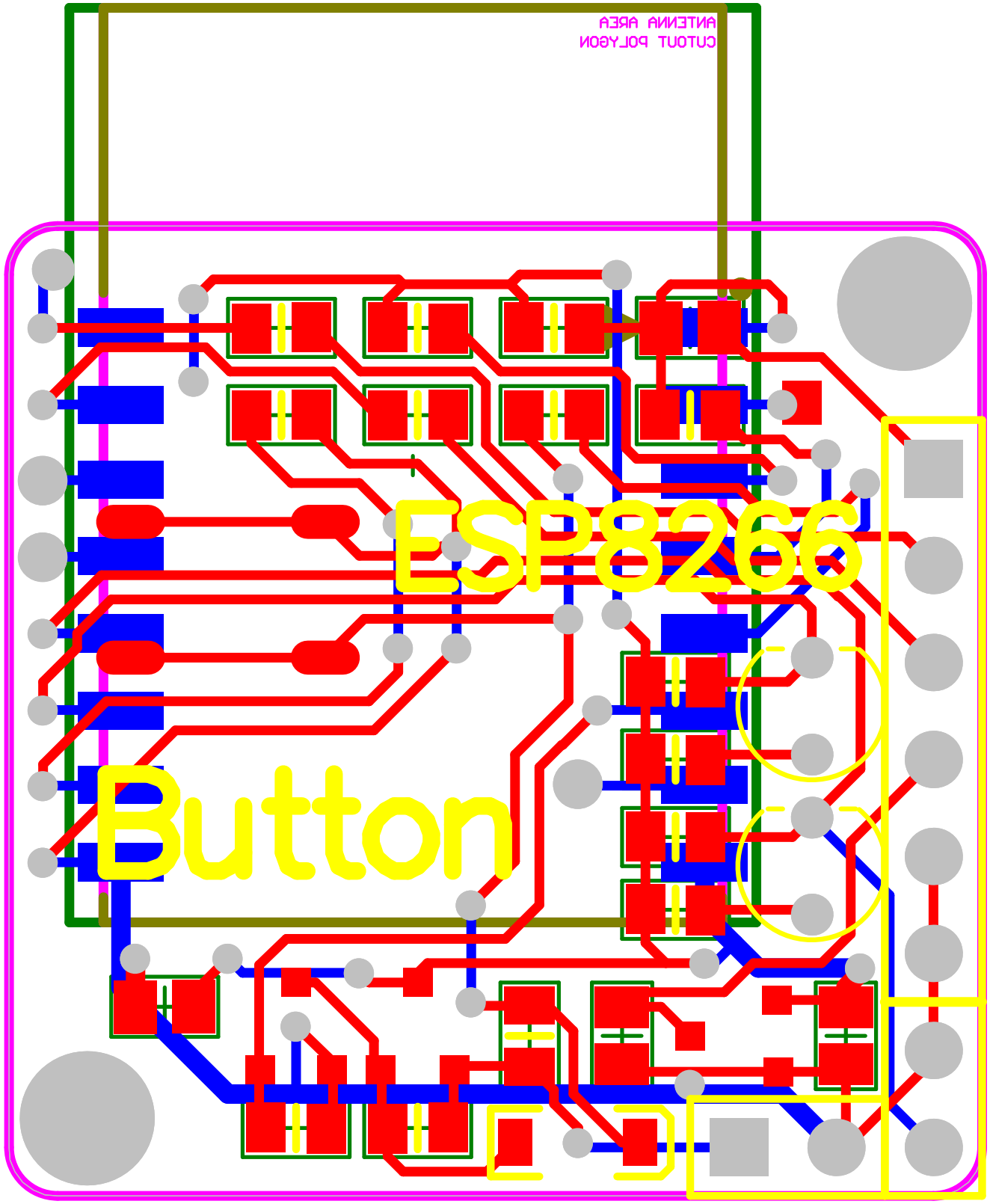
ANTENNA AREA
CUTOUT POLYGON
ESP8266
Button