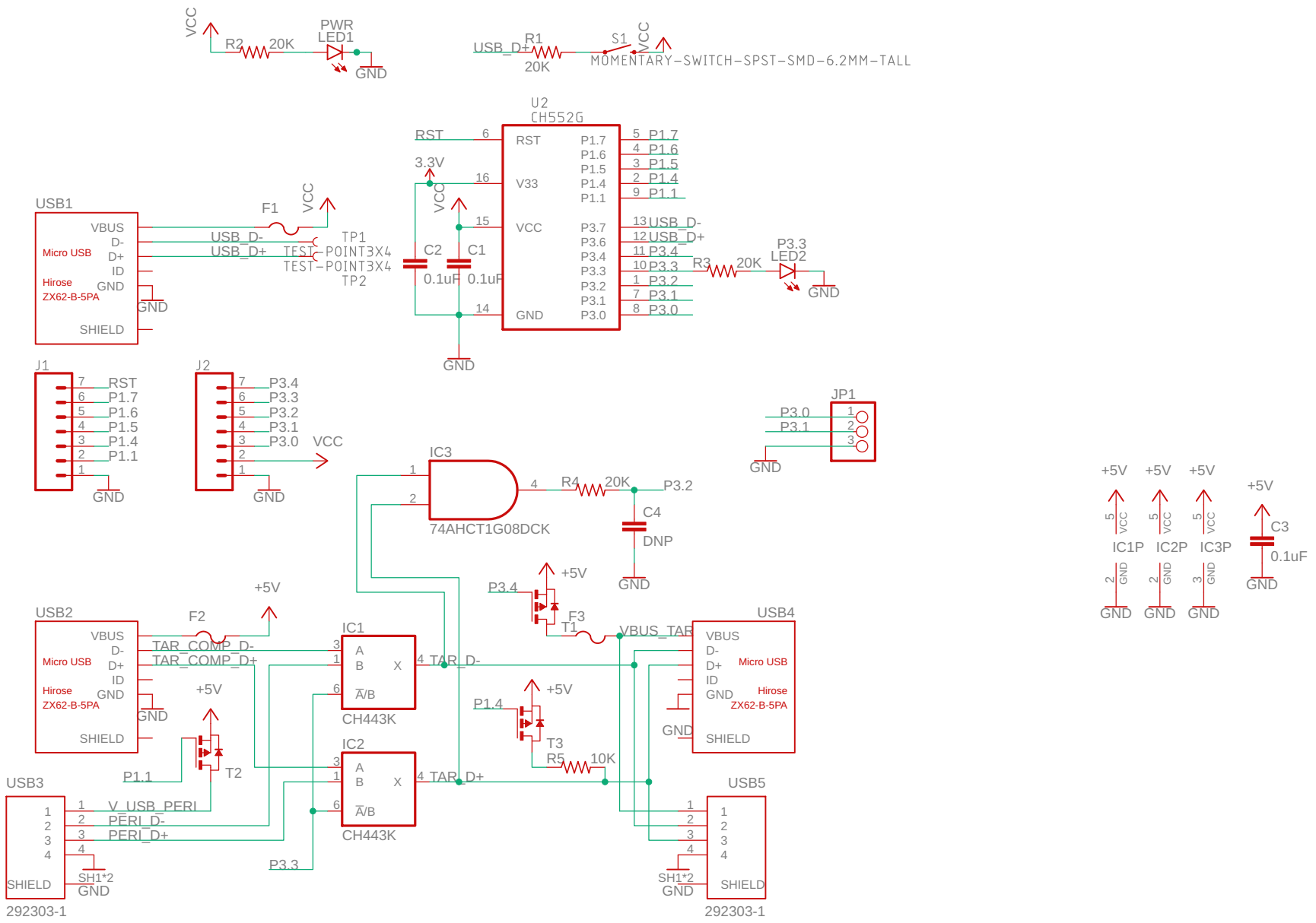

ch55xduino/pcb/ch55xRebootTool/ch55xRebootTool.sch (Sheet: 1/1)