# NOTES: (UNLESS OTHERWISE SPECIFIED)

1. SPECIFICATIONS AND DOCUMENTS:
   1.1. ELECTRICAL CONNECTIONS SHALL BE IAW OH-INTERCONNECT.

2. ALL ITEMS NOT EXPLICITLY DEFINED IN THIS DRAWING ARE DEFINED BY THE MASTER CAD MODELS. ALL DIMENSIONS NOT DEFINED ON THIS DRAWING ARE CONTAINED WITHIN THE FOLLOWING MANUFACTURING FILES:
   2.1. FDM 3D PRINTED PARTS: FDM_<PN>_<DESCRIPTION>_<REV>_V<VERSION # OF MODEL>.3MF
   2.2. RESIN 3D PRINTED PARTS: RESN_<PN>_<DESCRIPTION>_<REV>_V<VERSION # OF MODEL>.3MF
   2.3. MACHINED OR BENT PARTS: <PN>_<DESCRIPTION>_<REV>_V<VERSION # OF MODEL>.STEP

3. FINISH FN 3, 4, 8, & 10 IAW FED-STD-595, FS37038, FLAT BLACK
4. FINISH FN 10 TEXT IAW FED-STD-595, FS37875, INSIGNIA WHITE
5. FINISH FN 13 IAW FED-STD-595, FS33538, ORANGE YELLOW LEGEND TEXT IAW FED-STD-595, FS37038, FLAT BLACK

| REVISION HISTORY | | | |
|---|---|---|---|
| REV | DESCRIPTION | DATE | APPROVED |
| - | INITIAL RELEASE | 5/18/2023 | |
| A | FN 16 WAS QTY 17; IS QTY 15<br>ADDED 2X FN 35 | 7/27/2024 | J. STEENSEN |

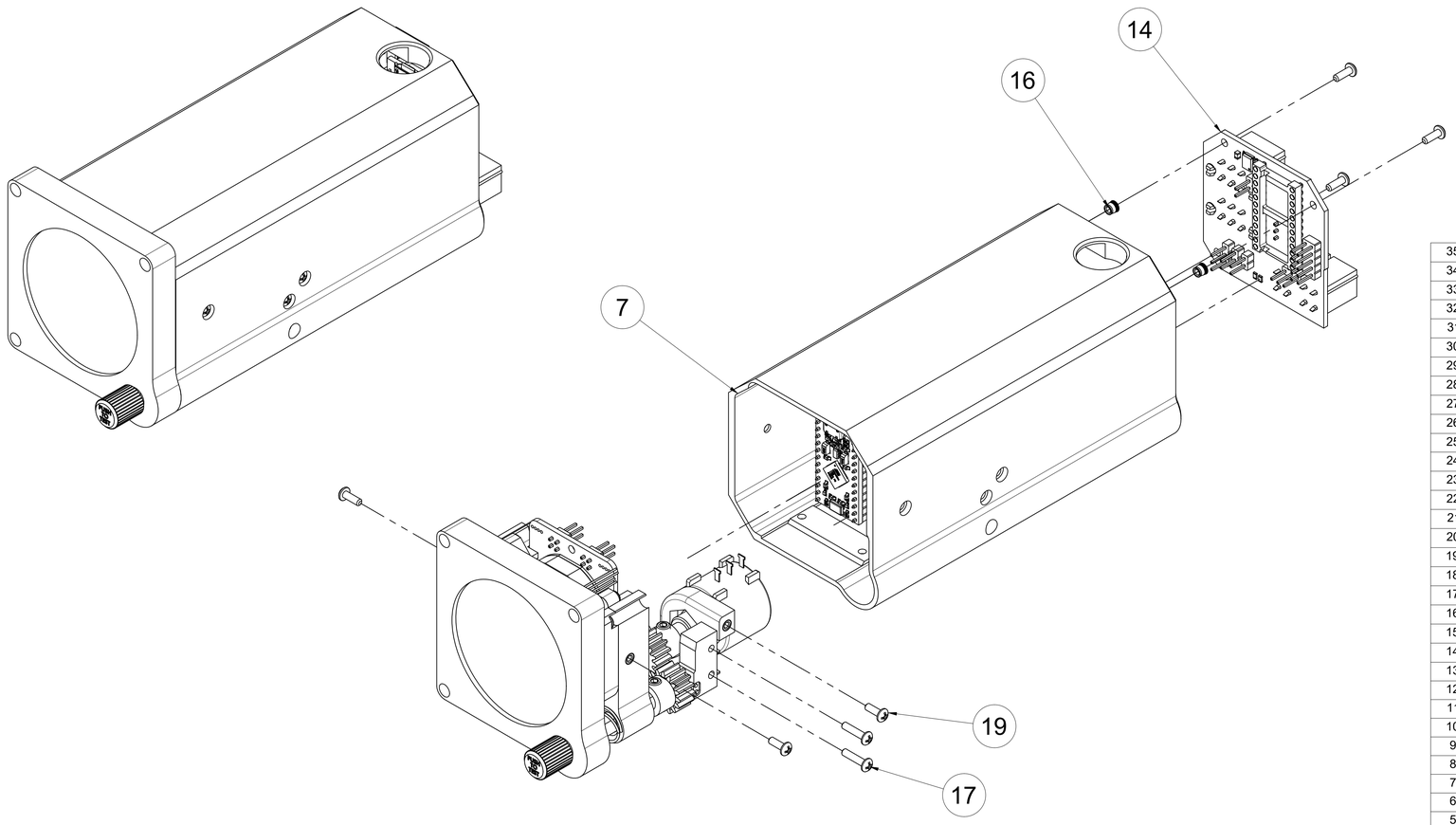


-1 ASSY

| ITEM | QTY | PART NUMBER | DESCRIPTION | MATERIAL |
|---|---|---|---|---|
| 35 | 2 | 93365A102 | INSERT, 0-80, BRASS, FOR PLASTICS | BRS |
| 34 | 2 | 92311A188 | SET SCREW, 8-32 X .1875, CUP POINT, 18-8 | SS |
| 33 | 1 | OHC0007-14 | 2 IN GAUGE STEPPER PCB | N/A |
| 32 | 2 | 1938 | LED, NEOPIXEL, DIFFUSED 5MM TH | N/A |
| 31 | 2 | 90380A322 | PHS, M1.6 X 5MM SELF-TAPPING, STEEL | SS |
| 30 | 1 | HK-5320 | SERVO, DIGITAL, ULTRA-MICRO, 1.7G | N/A |
| 29 | 2 | 90760A005 | NUT, NARROW, #4-40, STEEL | STL |
| 28 | 1 | 7658K17 | SWITCH, LIMIT, SUBMINIATURE, SNAP-ACTING, SPST | N/A |
| 27 | 1 | 3590S-2-103L | POT, 10K LINEAR, ROUND BODY, .250 X .811 S-SHAFT | N/A |
| 26 | 1 | 634070 | SERVOCITY, .250 X 2.250 D-SHAFT | SS |
| 25 | 1 | 1692K53 | TYPE 302 SS CONICAL COMPRESSION SPRING | SS |
| 24 | 2 | OH5A2A4-24 | GEAR, 16T, 32P, .250 D-SHAFT | PETG |
| 23 | 2 | LTW-420D7 | LED, THRU HOLE, T-1, WHITE | N/A |
| 22 | 1 | SMB 200 GTP | LENS, LED, FRESNEL, GREEN | N/A |
| 21 | 1 | SMB 200 RTP | LENS, LED, FRESNEL, RED | N/A |
| 20 | 1 | 92311A102 | SET SCREW, 4-40 X .093 CUP POINT, 18-8 | SS |
| 19 | 9 | 90272A077 | PHS, #2-56 X .250, STEEL | STL |
| 18 | 2 | 91772A064 | PHS, #0-80 X 0.4375, 18-8 | SS |
| 17 | 8 | 90272A079 | PHS, #2-56 X .375, STEEL | STL |
| 16 | 15 | 93365A110 | INSERT, 2-56, BRASS, FOR PLASTIC | BRS |
| 15 | 1 | VID29-02P | MICROSTEPPER, GAUGE, 315 DEG ROT | N/A |
| 14 | 1 | OH5A2A4-23 | PCB, RALT CONTROL | N/A |
| 13 | 1 | OH5A2A4-22 | RALT OFF FLAG | PETG |
| 12 | 1 | OH5A2A4-21 | RALT POT MOUNT | PETG |
| 11 | 1 | OH5A2A4-20 | RALT LIMIT SHAFT GEAR | PETG |
| 10 | 1 | OH5A2A4-19 | RALT KNOB | RESN |
| 9 | 1 | OH5A2A4-18 | RALT LIMIT INDEXER RING | PETG |
| 8 | 1 | OH5A2A4-17 | RALT NEEDLE | ACRL |
| 7 | 1 | OH5A2A4-16 | RALT CASE | PETG |
| 6 | 1 | OH5A2A4-15 | RALT STEPPER STANDOFF | PETG |
| 5 | 1 | OH5A2A4-14 | RALT STEPPER MOUNT | PETG |
| 4 | 1 | OH5A2A4-13 | RALT DIAL FACE | RMRK |
| 3 | 1 | OH5A2A4-12 | RALT NEEDLE MASK | PETG |
| 2 | 1 | OH5A2A4-11 | RALT GLASS COVER | ACRL |
| 1 | 1 | OH5A2A4-10 | RALT BEZEL | PETG |

PARTS LIST

UNLESS OTHERWISE SPECIFIED:

DIMENSIONS ARE IN INCHES.

DUAL DIMENSIONS ARE IN MILIMETERS AND ENCLOSED IN SQUARE BRACKETS.

INTERPRET DRAWING IAW ASME Y14.100-2017.

INTERPRET DIM AND TOL IAW ASME Y14.5-2009.

REMOVE ALL BURRS AND SHARP EDGES TO .05 MAX.

DIMENSIONS APPLY BEFORE FINISH.

UOS INCH TOLERANCES ARE:

DECIMALS:
.X ± .1
.XX ± .03
.XXX ± .010

ANGLES:
MACHINED ± .5°
LOCATING ± .5°
FORMED ± 2°
CHAMFERS ± 5°

DRILLED HOLE DIAMETERS:
.0135 - .125: +.004/-.001
.126 - .250: +.005/-.001
.251 - .500: +.006/-.001
.501 - .750: +.008/-.001
.751 - 1.000: +.010/-.001
1.001 - 2.000: +.012/-.001

OPEN HORNET
https://www.OpenHornet.com

TITLE
ASSY, RADAR ALTIMETER GAUGE
RIGHT CONSOLE

| | | |
|---|---|---|
| DESIGNED | J. STEENSEN | 5/18/2023 |
| CHECKED | J. STEENSEN | 5/18/2023 |
| DRAWN | B. LAZARUS | 5/18/2023 |

CC BY NC SA

SIZE D | DWG NO OH5A2A4-1 | REV A

SCALE 1.2:1 | DO NOT SCALE DWG | SHEET 1/3

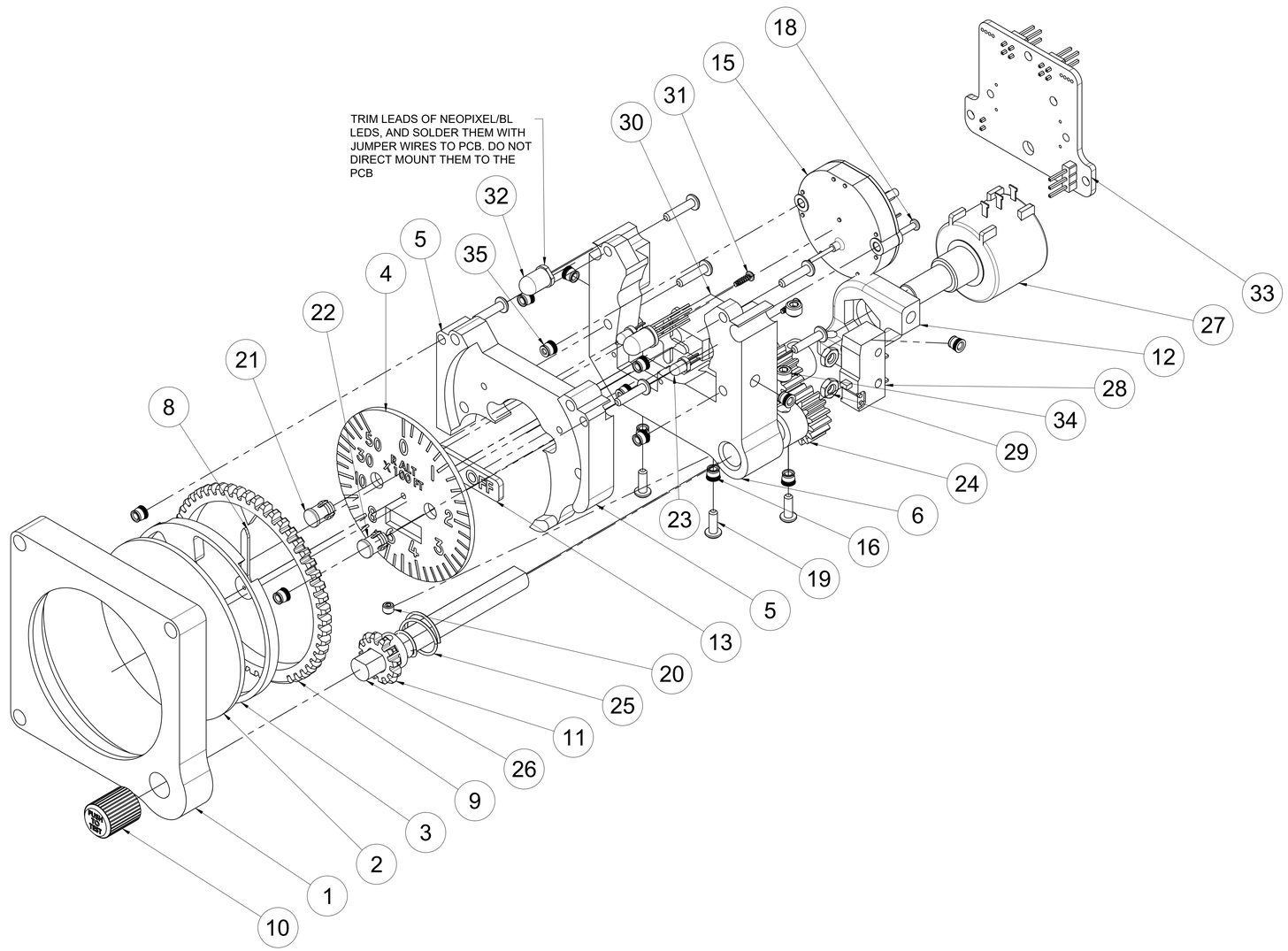


-1 ASSY

OPEN HORNET
https://www.OpenHornet.com

BY NC SA

| SIZE | DWG NO | REV |
|---|---|---|
| D | OH5A2A4-1 | A |
| SCALE 1.5:1 | | SHEET 2/3 |

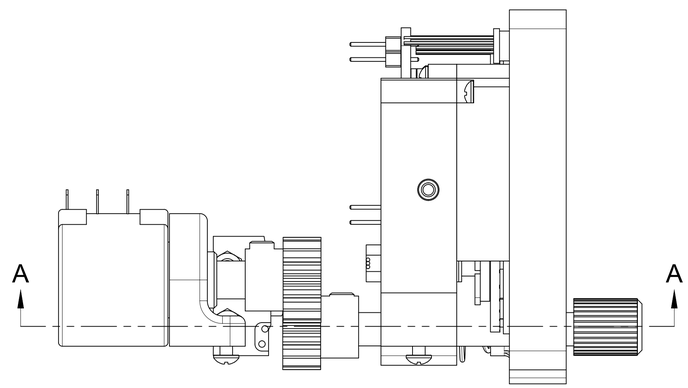


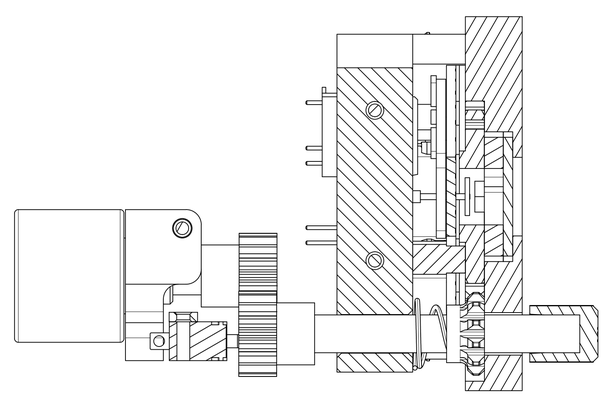

SECTION A-A
SCALE 2:1

-1 DETAIL

CC BY NC SA

OPEN HORNET
https://www.OpenHornet.com

| SIZE | DWG NO | REV |
|---|---|---|
| D | OH5A2A4-1 | A |
| SCALE 1:1 | | SHEET 3/3 |