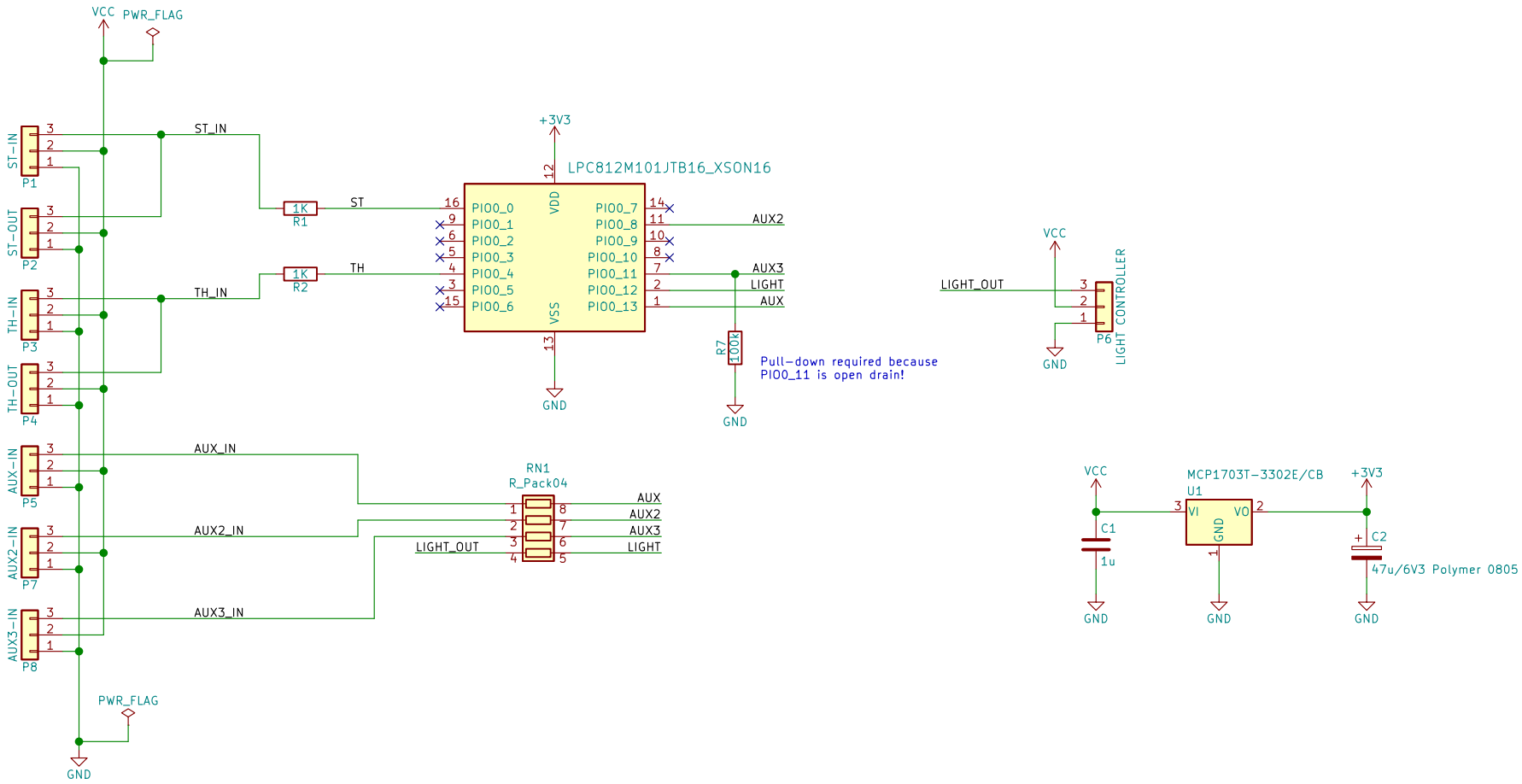

Light Controller pin usage:

PIO0_0	(16, TDO, ISP-Rx)	Steering input / Rx
PIO0_1	(9, TDI)	TLC5940 GSCLK
PIO0_2	(6, TMS, SWDIO)	TLC5940 SCLK
PIO0_3	(5, TCK, SWCLK)	TLC5940 XLAT
PIO0_4	(4, TRST, ISP-Tx)	Throttle input / Tx
PIO0_5	(3, RESET)	NC (test point)
PIO0_6	(15)	TLC5940 BLANK
PIO0_7	(14)	TLC5940 SIN
PIO0_8	(11, XTALIN)	===> AUX2
PIO0_9	(10, XTALOUT)	Switched light output (for driving a load via a MOSFET)
PIO0_10	(8, Open drain)	NC
PIO0_11	(7, Open drain)	===> AUX3 (100K pull-down)
PIO0_12	(2, ISP-entry)	OUT / ISP
PIO0_13	(1)	CH3 input

XSON16 package due to TSSOP16 shortage in 2021
Support for 3 AUX channels

LANE Boys RC

Sheet: /
File: preprocessor-multi-aux-xson16.sch

Title: Pre-processor for RC Light Controller

Size: A4	Date: 2021-02-07	**Rev: 2**
KiCad E.D.A. kicad 5.1.10-88a1d61d5888ubuntu18.04.1		Id: 1/1