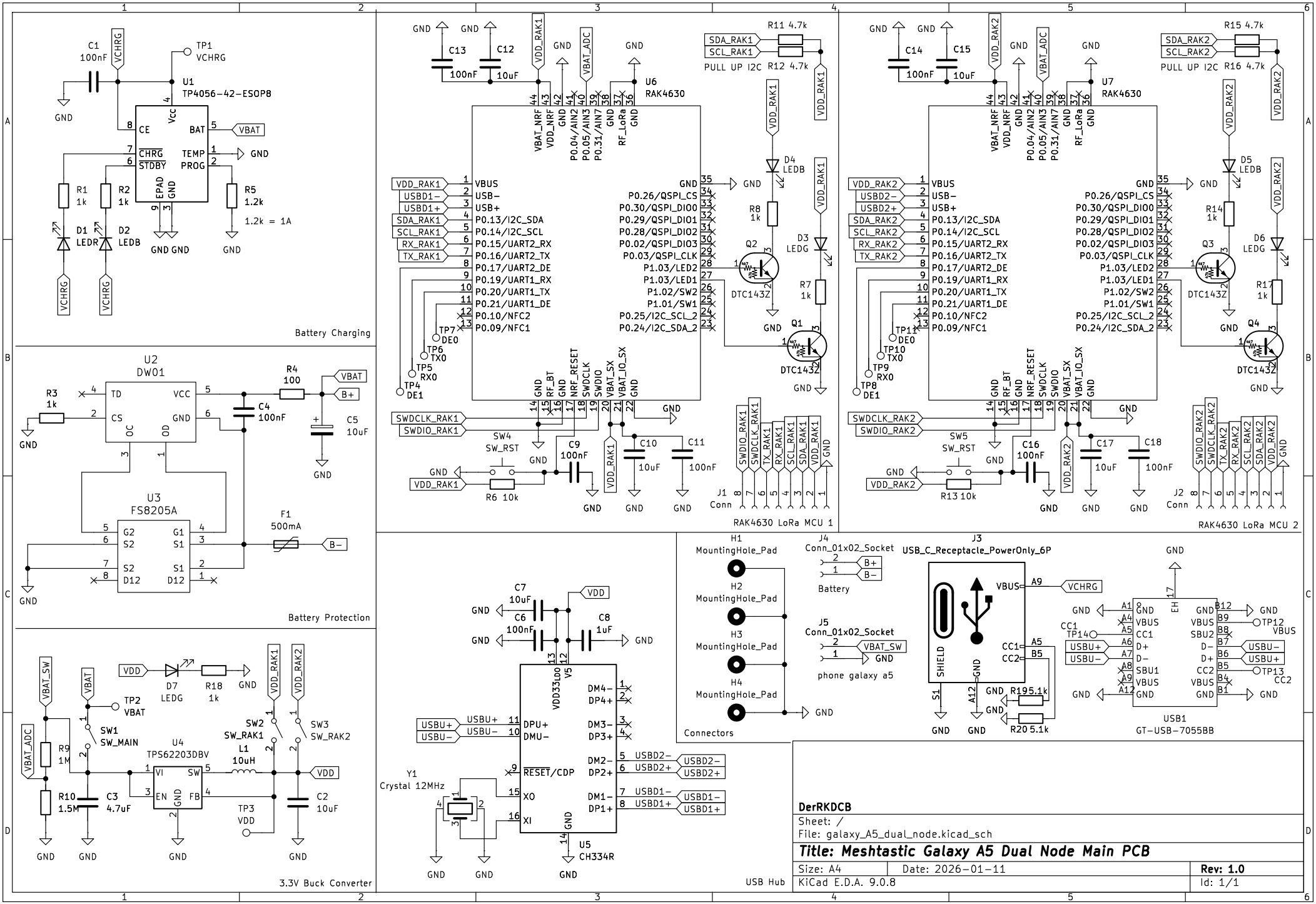
Battery Charging
U1
TP4056-42-ESOP8
C1
100nF
TP1
VCHRG
R1
1k
R2
1k
R5
1.2k
1.2k = 1A
D1
LEDR
D2
LEDB
Battery Protection
U2
DW01
U3
FS8205A
R3
1k
R4
100
C4
100nF
C5
10uF
F1
500mA
3.3V Buck Converter
U4
TPS62203DBV
L1
10uH
C2
10uF
C3
4.7uF
R9
1M
R10
1.5M
R18
1k
D7
LEDG
SW1
SW_MAIN
SW2
SW_RAK1
SW3
SW_RAK2
TP2
VBAT
TP3
VDD
RAK4630 LoRa MCU 1
U6
RAK4630
R11 4.7k
R12 4.7k
PULL UP I2C
D4
LEDB
D3
LEDG
R8
1k
R7
1k
Q2
Q1
DTC143Z
SW4
SW_RST
R6 10k
C9
100nF
C10
10uF
C11
100nF
J1
Conn
RAK4630 LoRa MCU 2
U7
RAK4630
R15 4.7k
R16 4.7k
D5
LEDB
D6
LEDG
R14
1k
R17
1k
Q3
Q4
SW5
SW_RST
R13 10k
C16
100nF
C17
10uF
C18
100nF
J2
Conn
USB Hub
U5
CH334R
Y1
Crystal 12MHz
C7
10uF
C6
100nF
C8
1uF
Connectors
H1
MountingHole_Pad
H2
MountingHole_Pad
H3
MountingHole_Pad
H4
MountingHole_Pad
J4
Conn_01x02_Socket
Battery
J5
Conn_01x02_Socket
phone galaxy a5
J3
USB_C_Receptacle_PowerOnly_6P
R19 5.1k
R20 5.1k
USB1
GT-USB-7055BB
DerRKDCB
Sheet: /
File: galaxy_A5_dual_node.kicad_sch
Title: Meshtastic Galaxy A5 Dual Node Main PCB
Size: A4
Date: 2026-01-11
Rev: 1.0
KiCad E.D.A. 9.0.8
Id: 1/1