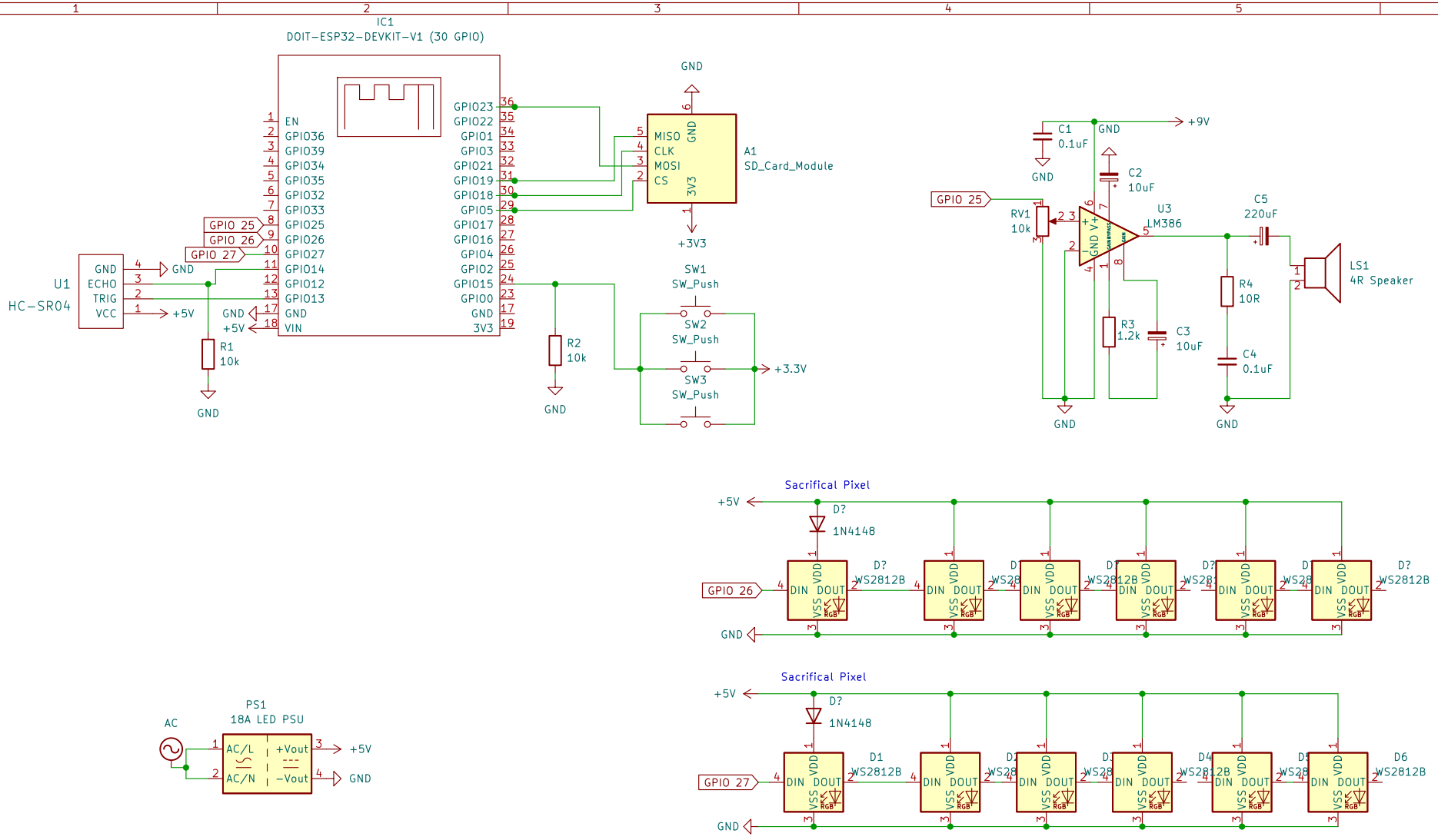

This is the third iteration of the design which is expected to be final.

JVWCSY

Sheet: /

File: DTI_Cube_Proto.kicad_sch

Title: DTI Staircase Cube

Size: A4	Date:	**Rev: 1**
KiCad E.D.A. eeschema (6.0.4)		Id: 1/1