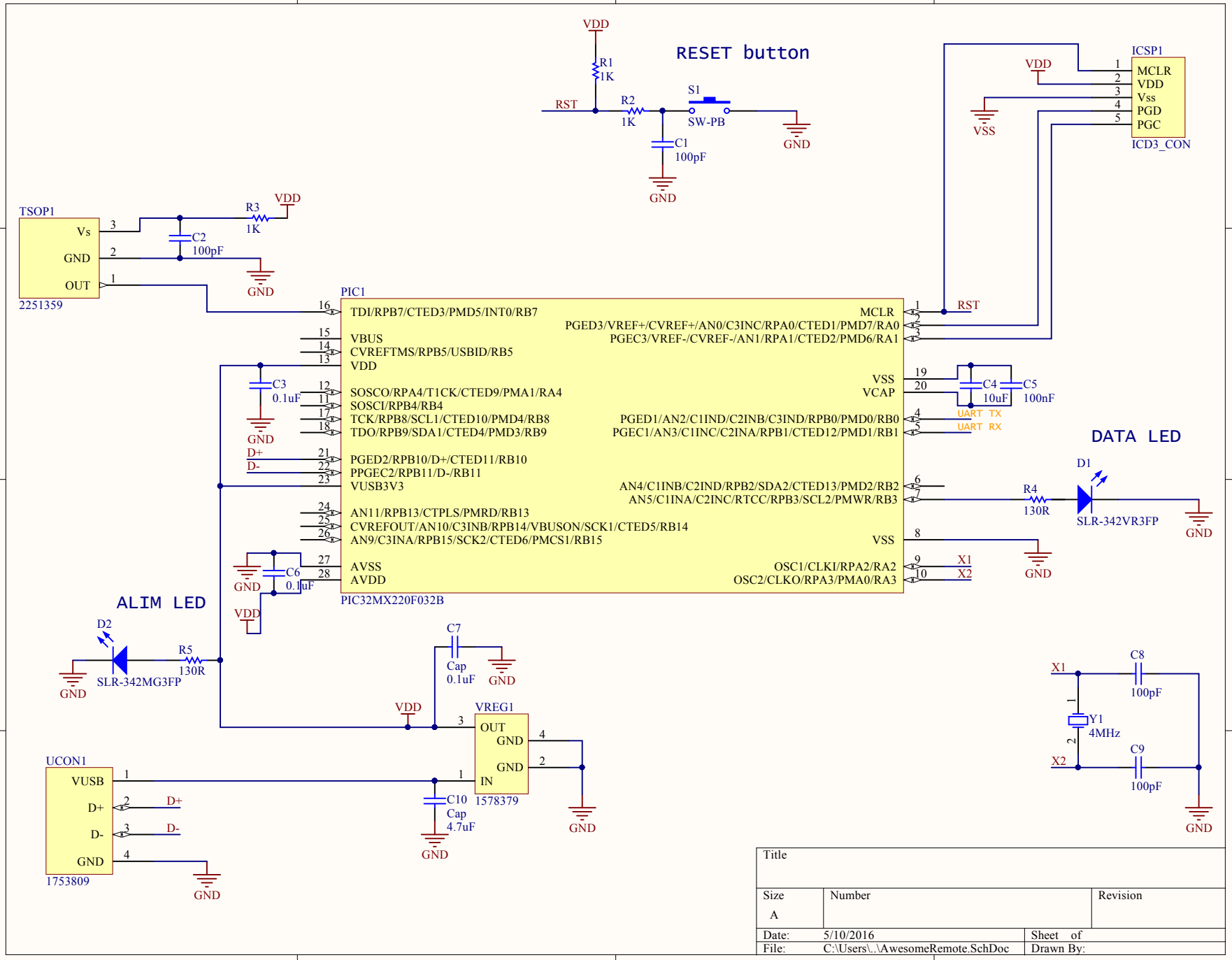
RESET button
VDD
R1
1K
RST
R2
1K
S1
SW-PB
C1
100pF
GND
ICSP1
MCLR
VDD
Vss
PGD
PGC
ICD3_CON
VDD
VSS
TSOP1
Vs
GND
OUT
2251359
R3
1K
VDD
C2
100pF
GND
PIC1
TDI/RPB7/CTED3/PMD5/INT0/RB7
VBUS
CVREFTMS/RPB5/USBID/RB5
VDD
SOSCO/RPA4/T1CK/CTED9/PMA1/RA4
SOSCI/RPB4/RB4
TCK/RPB8/SCL1/CTED10/PMD4/RB8
TDO/RPB9/SDA1/CTED4/PMD3/RB9
PGED2/RPB10/D+/CTED11/RB10
PPGEC2/RPB11/D-/RB11
VUSB3V3
AN11/RPB13/CTPLS/PMRD/RB13
CVREFOUT/AN10/C3INB/RPB14/VBUSON/SCK1/CTED5/RB14
AN9/C3INA/RPB15/SCK2/CTED6/PMCS1/RB15
AVSS
AVDD
MCLR
PGED3/VREF+/CVREF+/AN0/C3INC/RPA0/CTED1/PMD7/RA0
PGEC3/VREF-/CVREF-/AN1/RPA1/CTED2/PMD6/RA1
VSS
VCAP
PGED1/AN2/C1IND/C2INB/C3IND/RPB0/PMD0/RB0
PGEC1/AN3/C1INC/C2INA/RPB1/CTED12/PMD1/RB1
AN4/C1INB/C2IND/RPB2/SDA2/CTED13/PMD2/RB2
AN5/C1INA/C2INC/RTCC/RPB3/SCL2/PMWR/RB3
VSS
OSC1/CLKI/RPA2/RA2
OSC2/CLKO/RPA3/PMA0/RA3
PIC32MX220F032B
C3
0.1uF
GND
D+
D-
C6
0.1uF
GND
VDD
C4
10uF
C5
100nF
UART TX
UART RX
RST
X1
X2
DATA LED
D1
R4
130R
SLR-342VR3FP
GND
ALIM LED
D2
R5
130R
SLR-342MG3FP
GND
C7
Cap
0.1uF
GND
VDD
VREG1
OUT
GND
GND
IN
1578379
C10
Cap
4.7uF
GND
GND
UCON1
VUSB
D+
D-
GND
1753809
D+
D-
GND
C8
100pF
Y1
4MHz
C9
100pF
X1
X2
GND
Title
Size
A
Number
Revision
Date: 5/10/2016
Sheet of
File: C:\Users\..\AwesomeRemote.SchDoc
Drawn By: