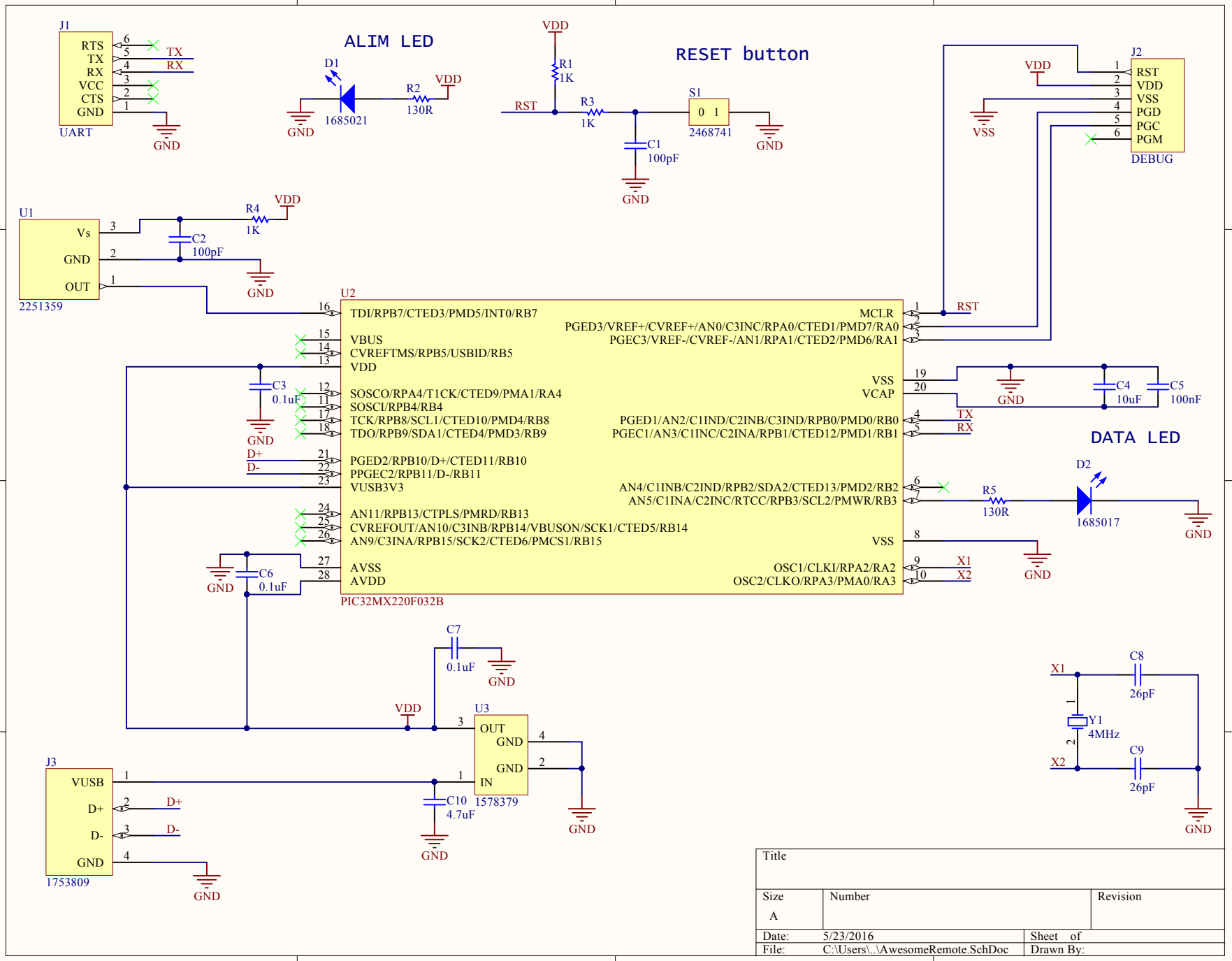

Title		
Size A	Number	Revision
Date: 5/23/2016		Sheet of
File: C:\Users\..\AwesomeRemote.SchDoc		Drawn By:

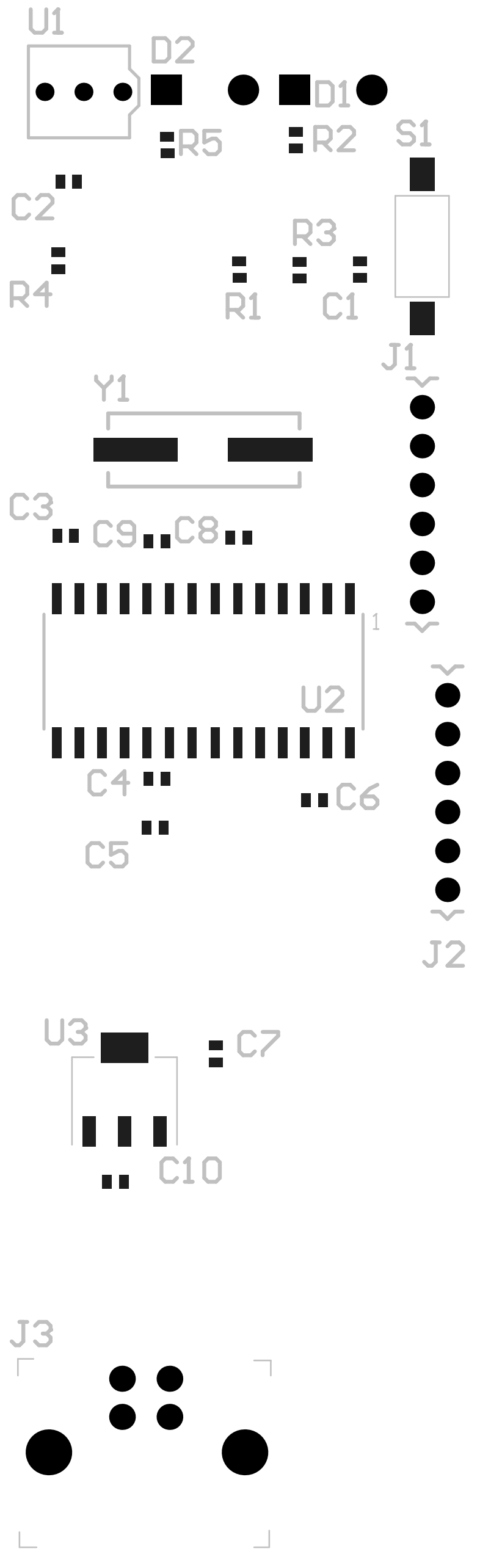
U1
D2
D1
R5
R2
S1
C2
R3
R4
R1
C1
J1
Y1
C3
C9
C8
1
U2
C4
C6
C5
J2
U3
C7
C10
J3