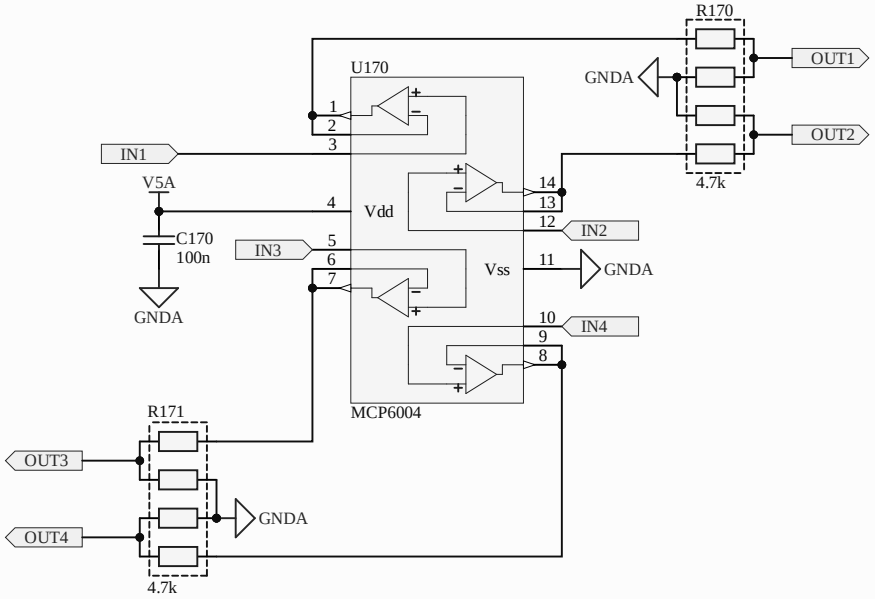
R170
U170
GNDA
OUT1
OUT2
IN1
V5A
4.7k
Vdd
C170
100n
IN3
IN2
Vss
GNDA
GNDA
IN4
MCP6004
R171
OUT3
GNDA
OUT4
4.7k

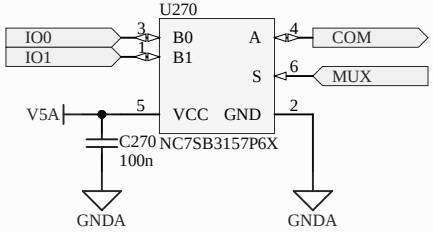
U270
IO0
IO1
3
1
B0
B1
A
S
4
6
COM
MUX
V5A
5
VCC
GND
2
C270
100n
NC7SB3157P6X
GNDA
GNDA

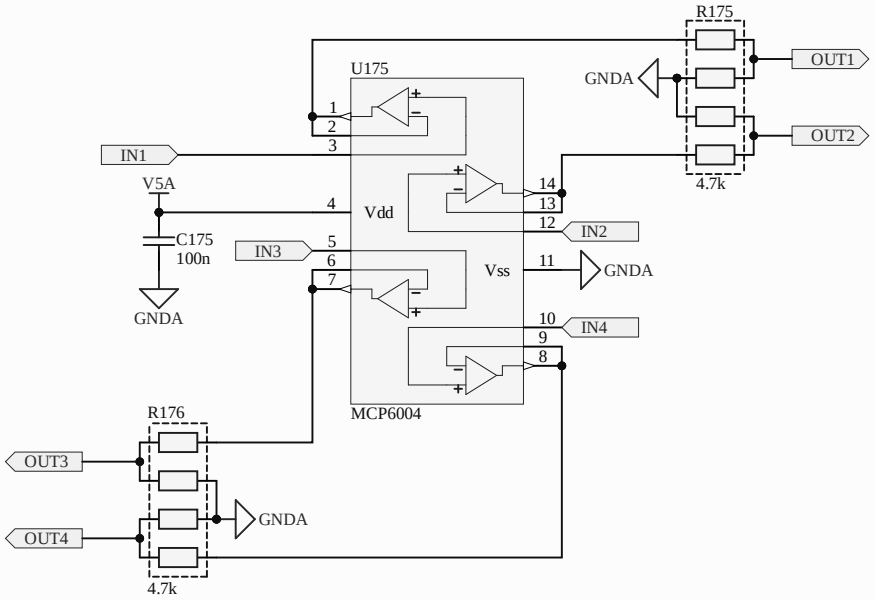
R175
U175
GNDA
OUT1
OUT2
IN1
V5A
4.7k
Vdd
C175
100n
IN3
IN2
Vss
GNDA
GNDA
IN4
MCP6004
R176
OUT3
GNDA
OUT4
4.7k

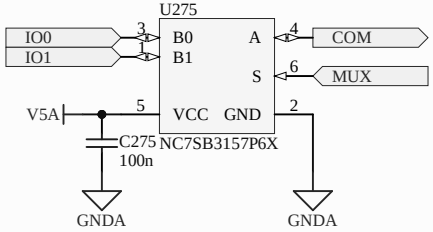
U275
IO0
IO1
3
1
B0
B1
A
S
4
6
COM
MUX
V5A
5
VCC
GND
2
C275
100n
NC7SB3157P6X
GNDA
GNDA

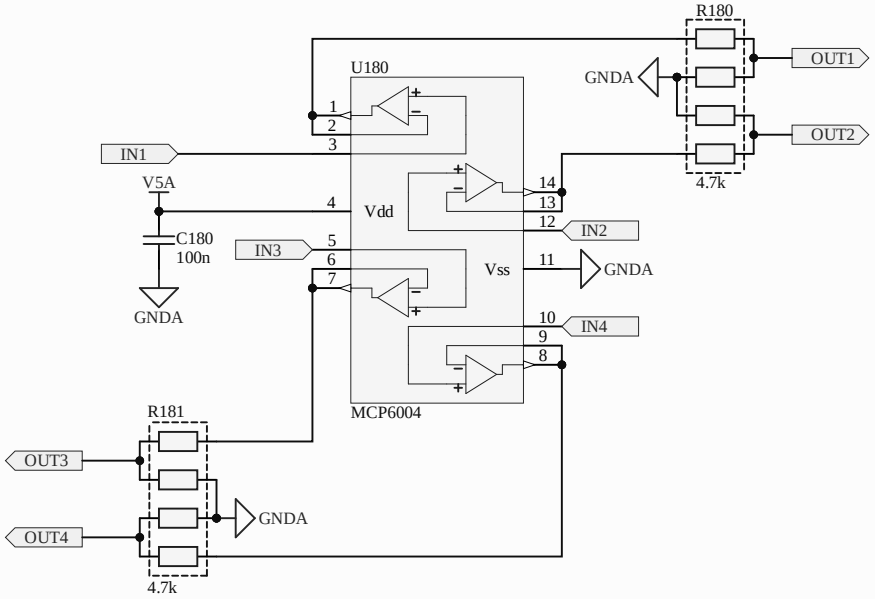
R180
U180
GNDA
OUT1
OUT2
IN1
V5A
4.7k
Vdd
C180
100n
IN3
IN2
Vss
GNDA
GNDA
IN4
MCP6004
R181
OUT3
GNDA
OUT4
4.7k

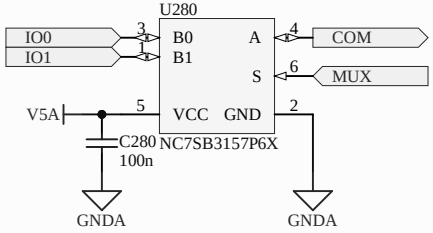
U280
IO0
IO1
3
1
B0
B1
A
S
4
6
COM
MUX
V5A
5
VCC
GND
2
C280
100n
NC7SB3157P6X
GNDA
GNDA

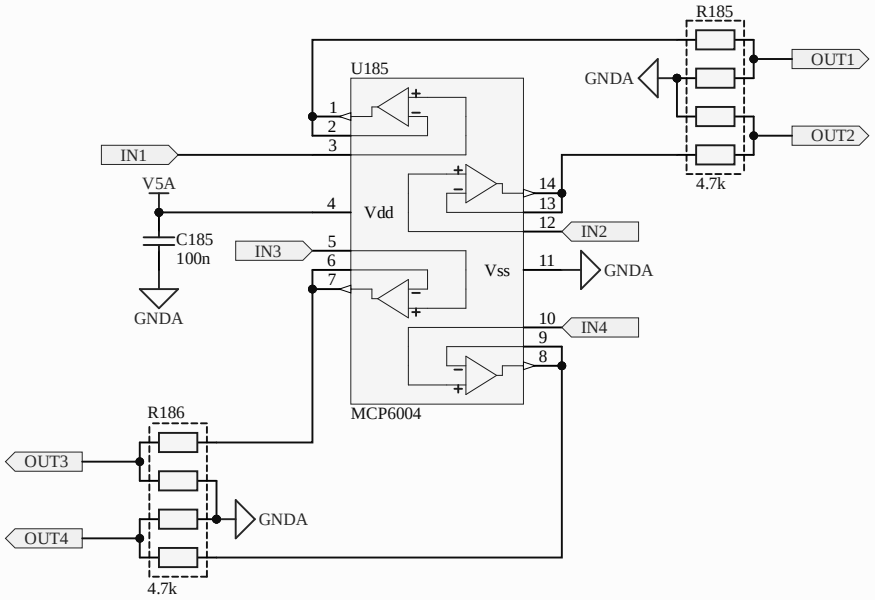
R185
U185
GNDA
OUT1
OUT2
IN1
V5A
4.7k
Vdd
C185
100n
IN3
IN2
Vss
GNDA
GNDA
IN4
MCP6004
R186
OUT3
GNDA
OUT4
4.7k

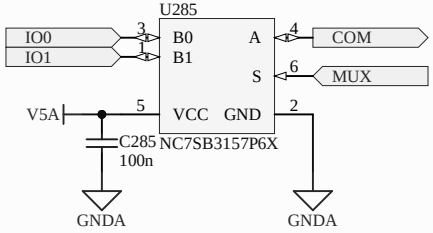
U285
IO0
IO1
3
1
B0
B1
A
S
4
6
COM
MUX
V5A
5
VCC
GND
2
C285
100n
NC7SB3157P6X
GNDA
GNDA

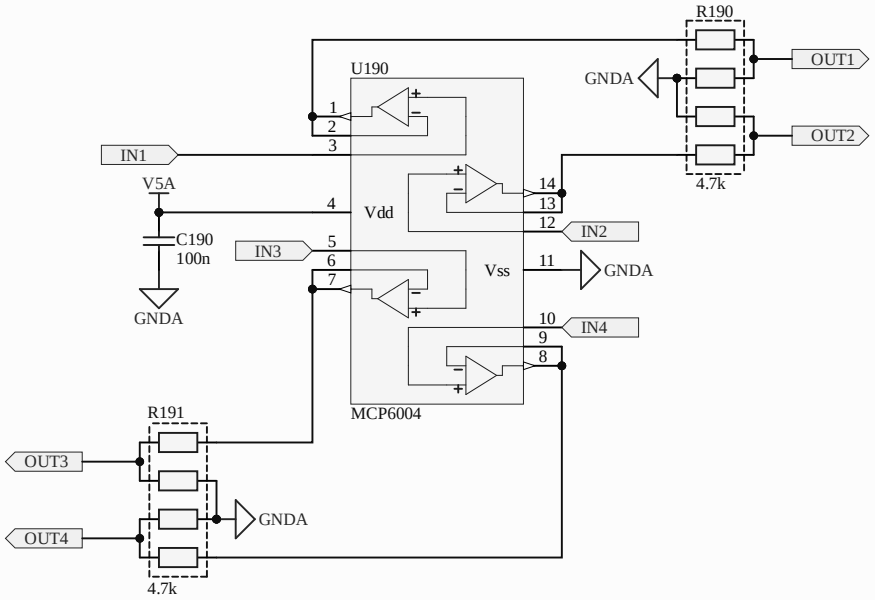
R190
U190
GNDA
OUT1
OUT2
IN1
V5A
C190
100n
GNDA
IN3
Vdd
Vss
IN2
GNDA
IN4
MCP6004
4.7k
R191
OUT3
OUT4
GNDA
4.7k

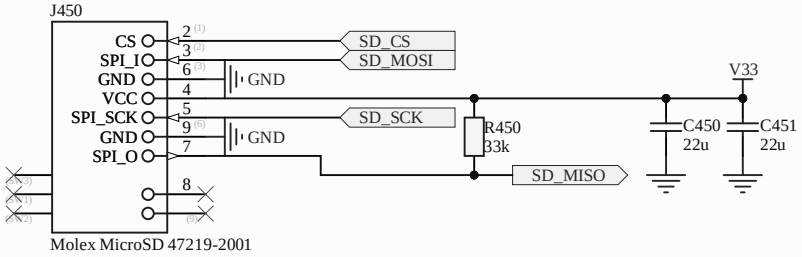
J450
CS
SPI_I
GND
VCC
SPI_SCK
GND
SPI_O
2
3
6
4
5
9
7
8
SD_CS
SD_MOSI
GND
SD_SCK
GND
R450
33k
SD_MISO
V33
C450
22u
C451
22u
Molex MicroSD 47219-2001

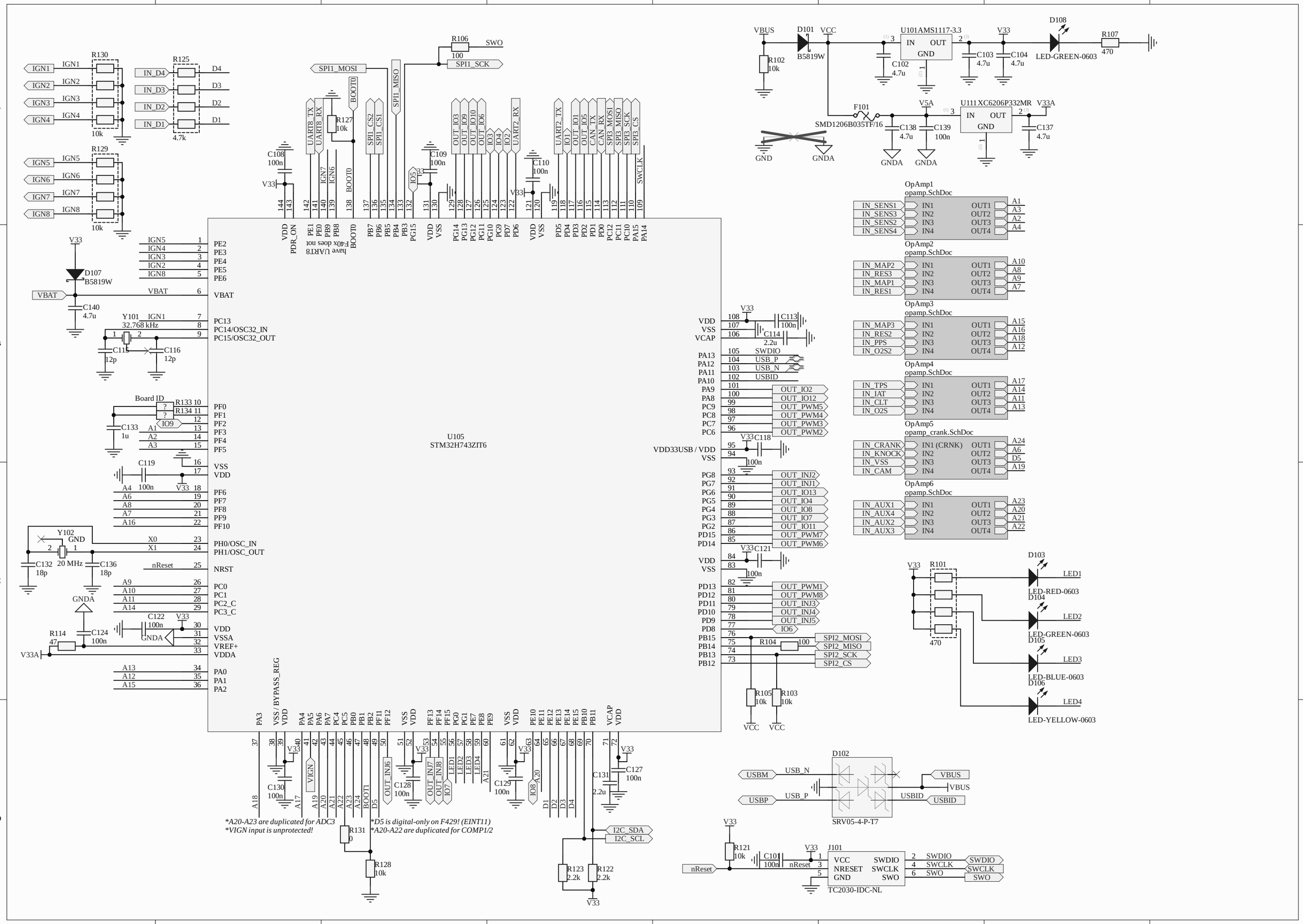
U105
STM32H743ZIT6
U101AMS1117-3.3
U111XC6206P332MR
OpAmp1
opamp.SchDoc
OpAmp2
opamp.SchDoc
OpAmp3
opamp.SchDoc
OpAmp4
opamp.SchDoc
OpAmp5
opamp_crank.SchDoc
OpAmp6
opamp.SchDoc
SRV05-4-P-T7
TC2030-IDC-NL
LED-RED-0603
LED-GREEN-0603
LED-BLUE-0603
LED-YELLOW-0603
*A20-A23 are duplicated for ADC3
*VIGN input is unprotected!
*D5 is digital-only on F429! (EINT11)
*A20-A22 are duplicated for COMP1/2

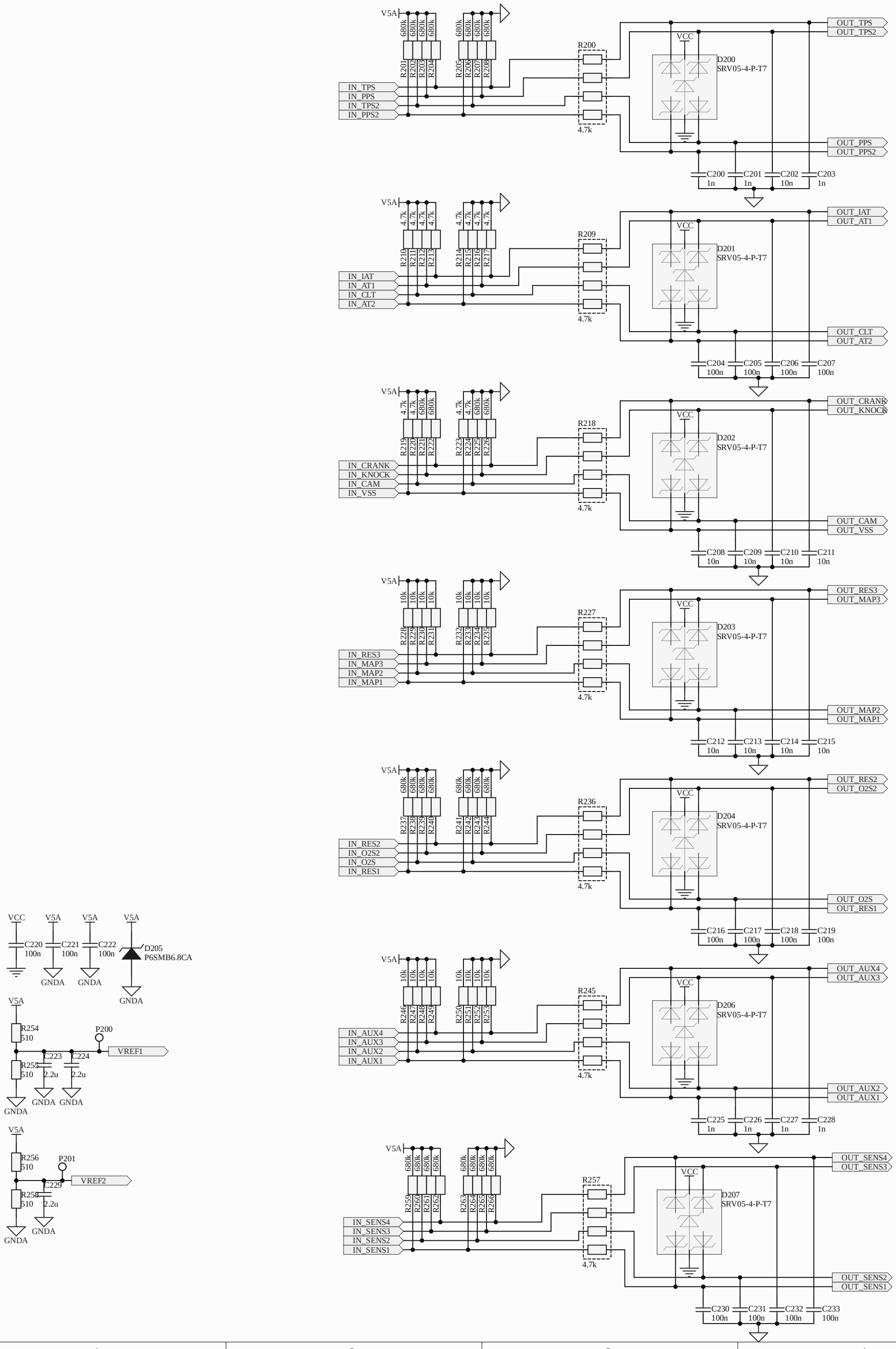
V5A
680k
R201 R202 R203 R204 R205 R206 R207 R208
IN_TPS
IN_PPS
IN_TPS2
IN_PPS2
R200
4.7k
VCC
D200
SRV05-4-P-T7
OUT_TPS
OUT_TPS2
OUT_PPS
OUT_PPS2
C200 1n
C201 1n
C202 10n
C203 1n
4.7k
R210 R211 R212 R213 R214 R215 R216 R217
IN_IAT
IN_AT1
IN_CLT
IN_AT2
R209
D201
SRV05-4-P-T7
OUT_IAT
OUT_AT1
OUT_CLT
OUT_AT2
C204 100n
C205 100n
C206 100n
C207 100n
680k
R219 R220 R221 R222 R223 R224 R225 R226
IN_CRANK
IN_KNOCK
IN_CAM
IN_VSS
R218
D202
SRV05-4-P-T7
OUT_CRANK
OUT_KNOCK
OUT_CAM
OUT_VSS
C208 10n
C209 10n
C210 10n
C211 10n
10k
R228 R229 R230 R231 R232 R233 R234 R235
IN_RES3
IN_MAP3
IN_MAP2
IN_MAP1
R227
D203
SRV05-4-P-T7
OUT_RES3
OUT_MAP3
OUT_MAP2
OUT_MAP1
C212 10n
C213 10n
C214 10n
C215 10n
R237 R238 R239 R240 R241 R242 R243 R244
IN_RES2
IN_O2S2
IN_O2S
IN_RES1
R236
D204
SRV05-4-P-T7
OUT_RES2
OUT_O2S2
OUT_O2S
OUT_RES1
C216 100n
C217 100n
C218 100n
C219 100n
R246 R247 R248 R249 R250 R251 R252 R253
IN_AUX4
IN_AUX3
IN_AUX2
IN_AUX1
R245
D206
SRV05-4-P-T7
OUT_AUX4
OUT_AUX3
OUT_AUX2
OUT_AUX1
C225 1n
C226 1n
C227 1n
C228 1n
R259 R260 R261 R262 R263 R264 R265 R266
IN_SENS4
IN_SENS3
IN_SENS2
IN_SENS1
R257
D207
SRV05-4-P-T7
OUT_SENS4
OUT_SENS3
OUT_SENS2
OUT_SENS1
C230 100n
C231 100n
C232 100n
C233 100n
VCC
C220 100n
C221 100n
C222 100n
D205
P6SMB6.8CA
GNDA
R254 510
R255 510
P200
VREF1
C223 2.2u
C224 2.2u
R256 510
R258 510
P201
VREF2
C229 2.2u

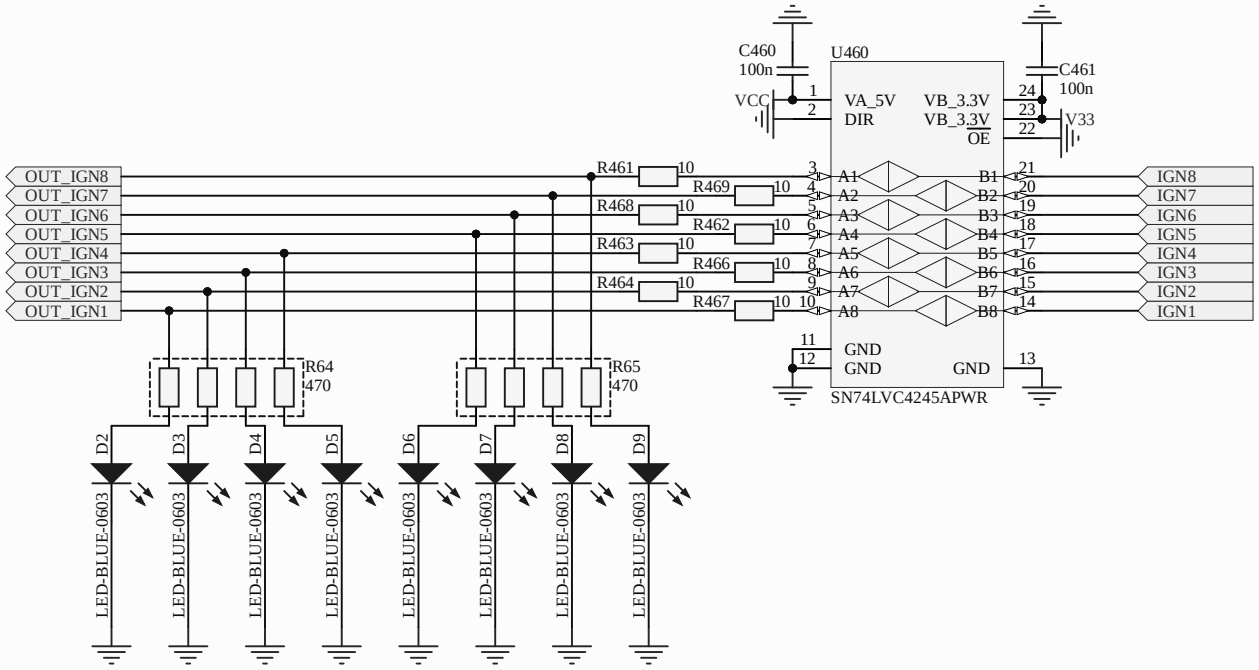
C460
100n
VCC
U460
VA_5V
DIR
VB_3.3V
VB_3.3V
OE
C461
100n
V33
OUT_IGN8
OUT_IGN7
OUT_IGN6
OUT_IGN5
OUT_IGN4
OUT_IGN3
OUT_IGN2
OUT_IGN1
R461
R469
R468
R462
R463
R466
R464
R467
A1
A2
A3
A4
A5
A6
A7
A8
B1
B2
B3
B4
B5
B6
B7
B8
IGN8
IGN7
IGN6
IGN5
IGN4
IGN3
IGN2
IGN1
GND
GND
GND
SN74LVC4245APWR
R64
470
R65
470
D2
D3
D4
D5
D6
D7
D8
D9
LED-BLUE-0603

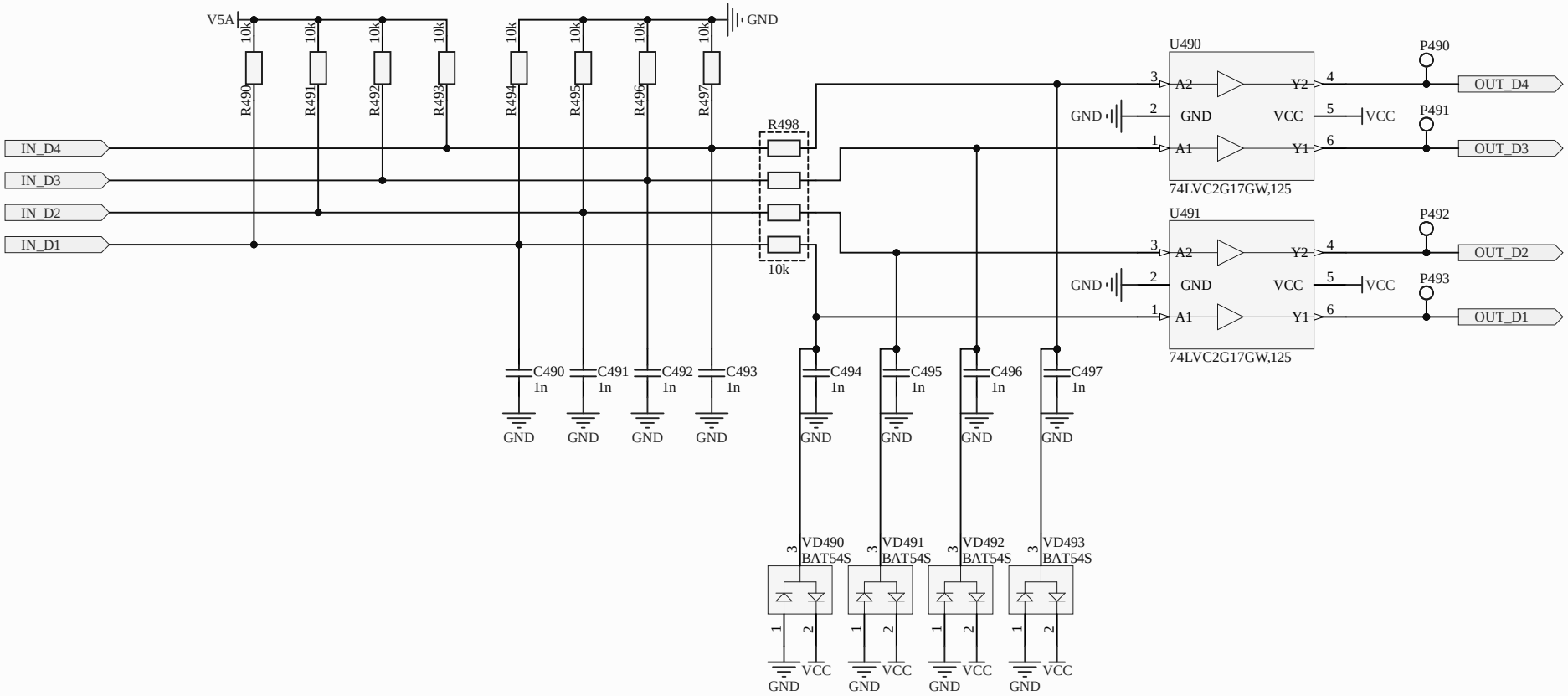
V5A
GND
10k
R490
R491
R492
R493
R494
R495
R496
R497
R498
IN_D4
IN_D3
IN_D2
IN_D1
U490
U491
A2
A1
Y2
Y1
VCC
74LVC2G17GW,125
P490
P491
P492
P493
OUT_D4
OUT_D3
OUT_D2
OUT_D1
C490
C491
C492
C493
C494
C495
C496
C497
1n
VD490
VD491
VD492
VD493
BAT54S

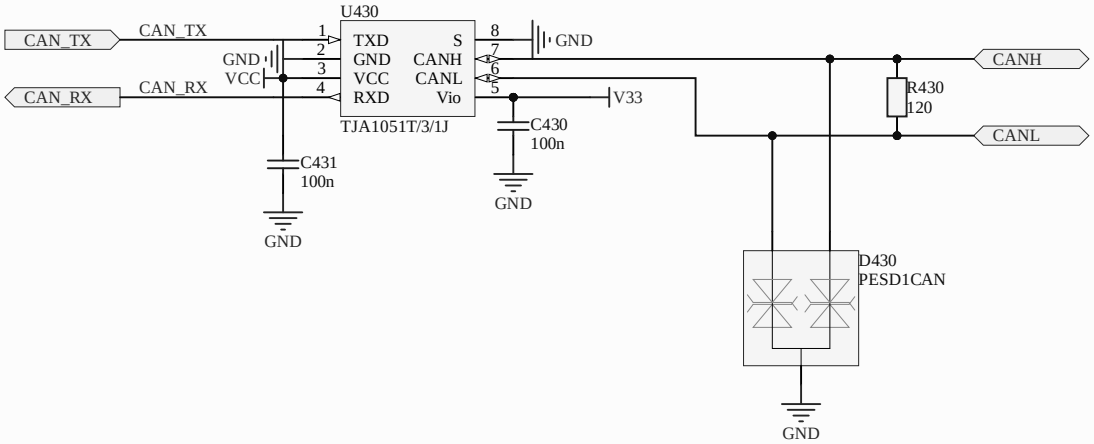
U430
CAN_TX
CAN_TX
CAN_RX
CAN_RX
GND
VCC
1
2
3
4
TXD
GND
VCC
RXD
S
CANH
CANL
Vio
8
7
6
5
GND
V33
TJA1051T/3/1J
C430
100n
GND
C431
100n
GND
CANH
CANL
R430
120
D430
PESD1CAN
GND

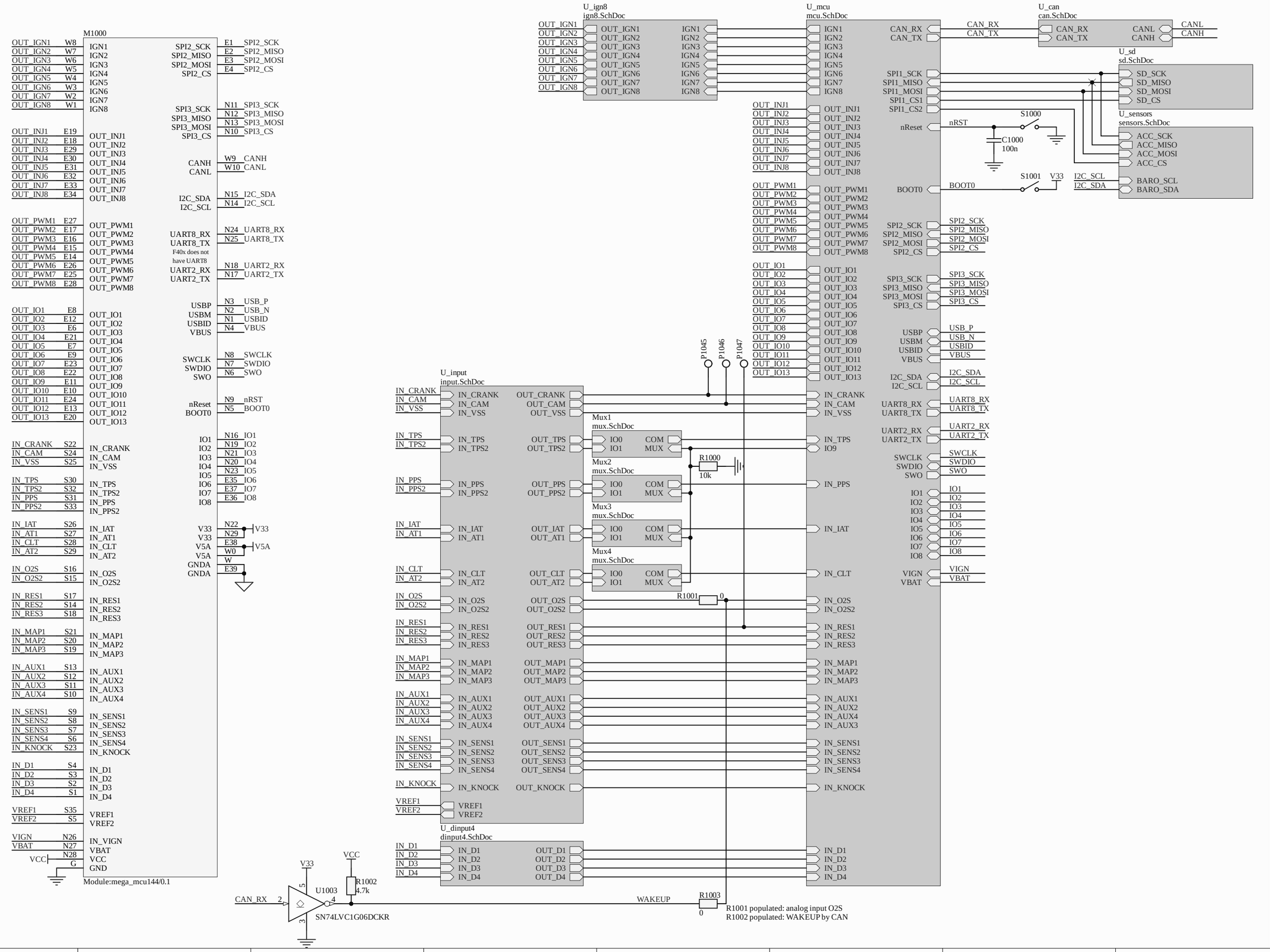
M1000
Module:mega_mcu144/0.1
U_ign8
ign8.SchDoc
U_mcu
mcu.SchDoc
U_can
can.SchDoc
U_sd
sd.SchDoc
U_sensors
sensors.SchDoc
S1000
C1000
100n
S1001
V33
BOOT0
nRST
nReset
U_input
input.SchDoc
Mux1
mux.SchDoc
Mux2
mux.SchDoc
Mux3
mux.SchDoc
Mux4
mux.SchDoc
R1000
10k
R1001
0
U_dinput4
dinput4.SchDoc
P1045
P1046
P1047
VCC
V33
U1003
SN74LVC1G06DCKR
R1002
4.7k
CAN_RX
WAKEUP
R1003
0
R1001 populated: analog input O2S
R1002 populated: WAKEUP by CAN

More accurate threshold for "raw" connection of VR sensors

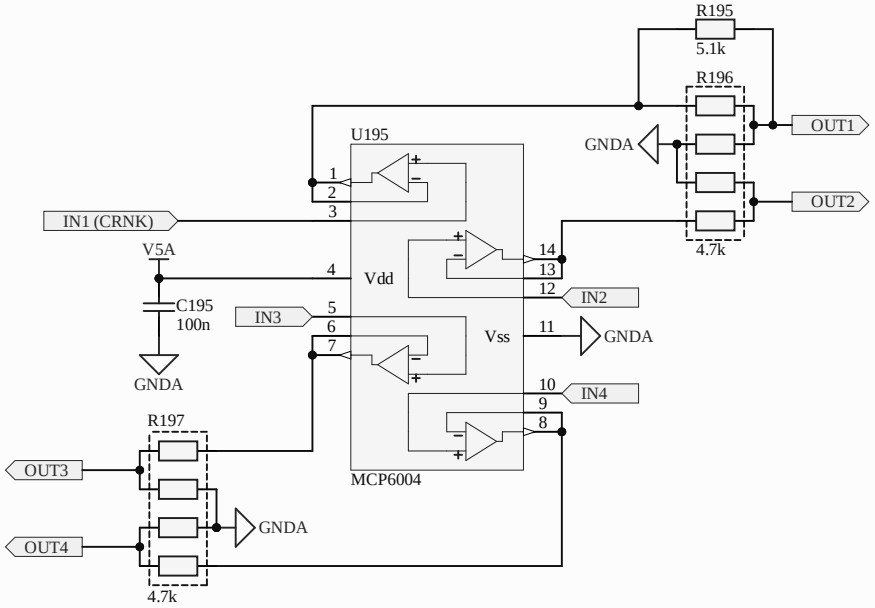

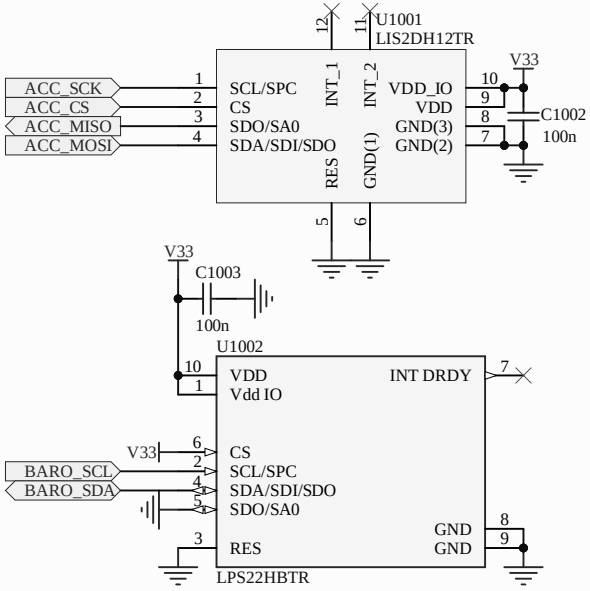
U1001
LIS2DH12TR
ACC_SCK
ACC_CS
ACC_MISO
ACC_MOSI
SCL/SPC
CS
SDO/SA0
SDA/SDI/SDO
INT_1
INT_2
RES
GND(1)
VDD_IO
VDD
GND(3)
GND(2)
V33
C1002
100n
C1003
100n
U1002
VDD
Vdd IO
INT DRDY
CS
SCL/SPC
SDA/SDI/SDO
SDO/SA0
RES
GND
GND
BARO_SCL
BARO_SDA
LPS22HBTR