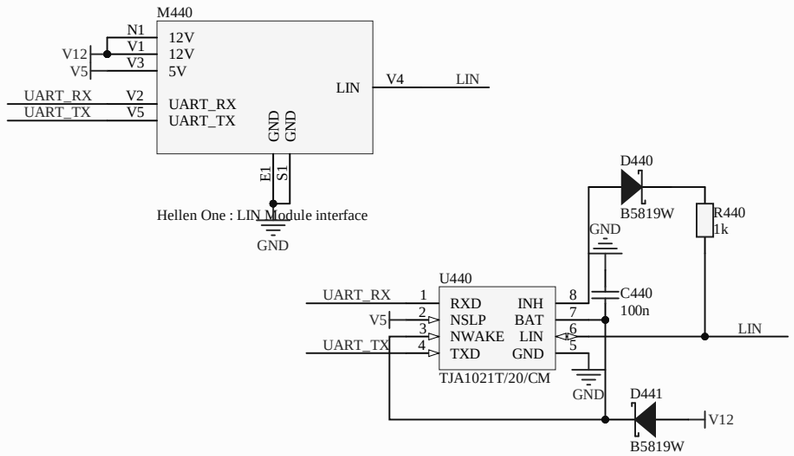

Title: ***Hellen-One LIN***			***rusEFI EMS***
Size: A3	Author: andreika	Revision: 0.1	***Hellen-One Platform***
Date: 28.01.2021		Sheet 1 of 1	*https://rusefi.com/s/hellen72*