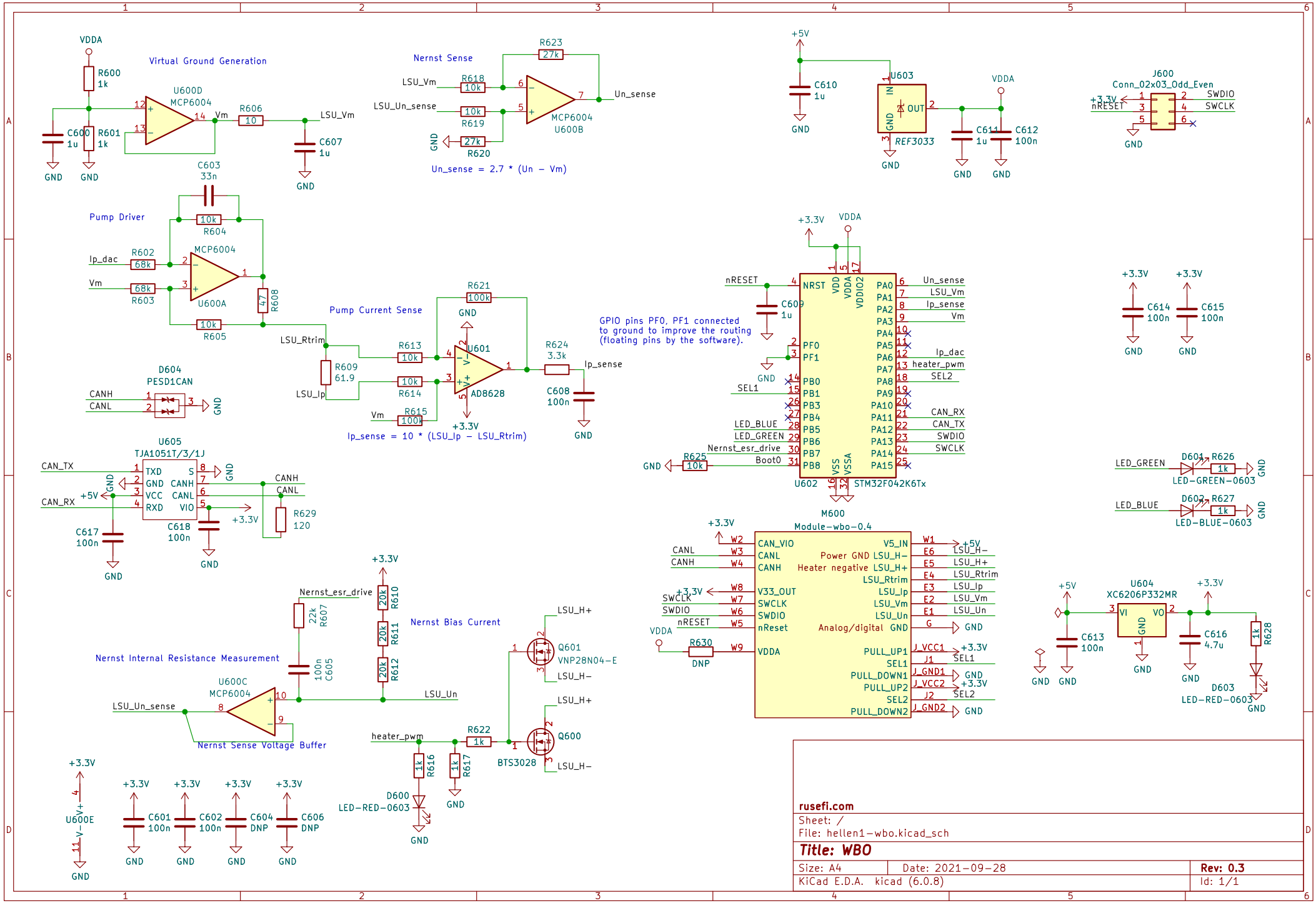

rusefi.com

Sheet: /

File: hellen1-wbo.kicad_sch

Title: WBO

Size: A4	Date: 2021-09-28	Rev: 0.3
KiCad E.D.A. kicad (6.0.8)		Id: 1/1