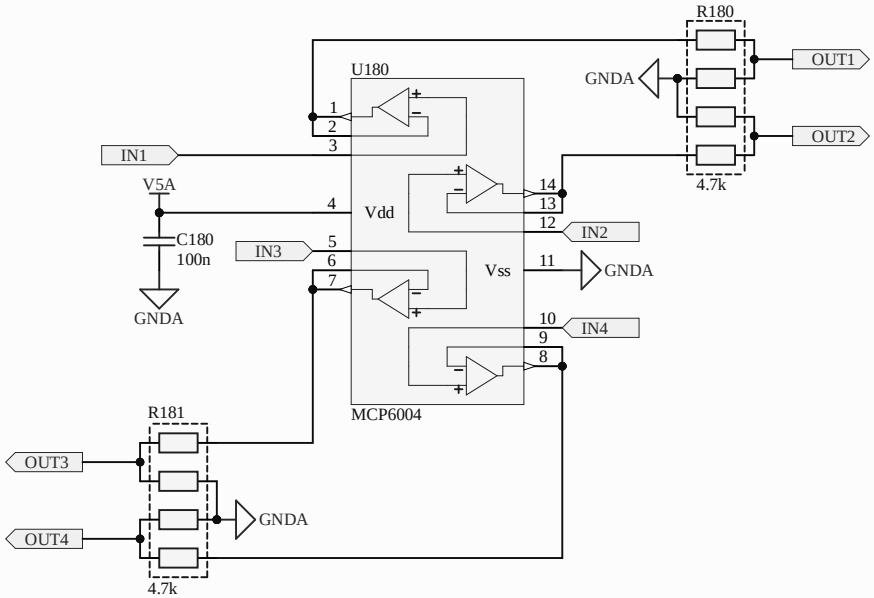
R180
U180
GNDA
OUT1
OUT2
IN1
V5A
4.7k
Vdd
C180
100n
IN3
IN2
Vss
GNDA
GNDA
IN4
MCP6004
R181
OUT3
GNDA
OUT4
4.7k

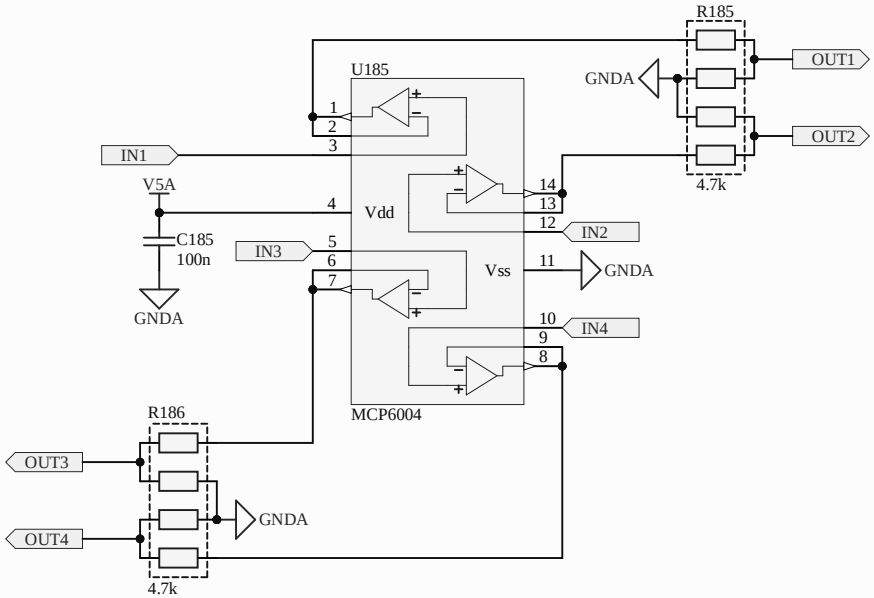
R185
U185
GNDA
OUT1
OUT2
IN1
V5A
4.7k
Vdd
C185
100n
IN3
IN2
Vss
GNDA
GNDA
IN4
MCP6004
R186
OUT3
GNDA
OUT4
4.7k

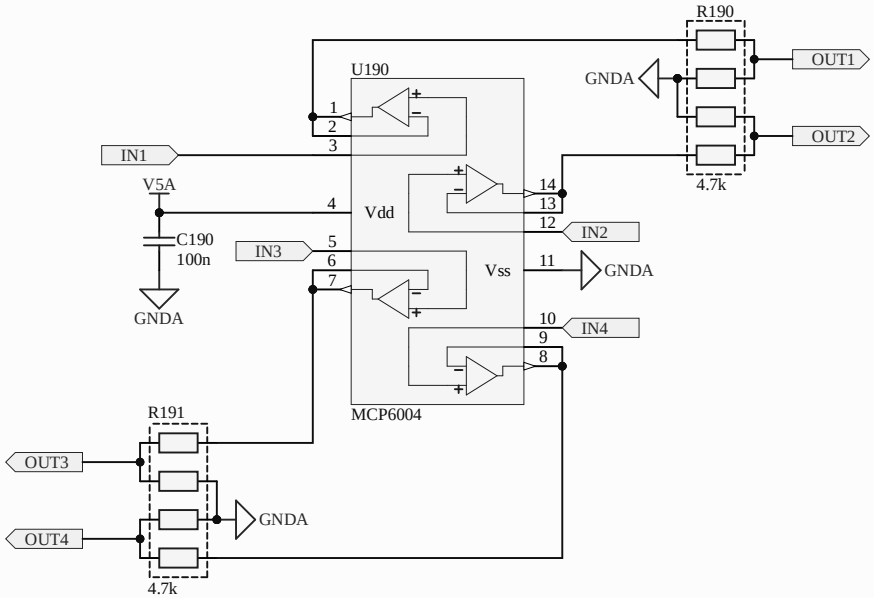
R190
U190
GNDA
OUT1
OUT2
IN1
V5A
4.7k
Vdd
C190
100n
IN3
IN2
Vss
GNDA
GNDA
IN4
MCP6004
R191
OUT3
GNDA
OUT4
4.7k

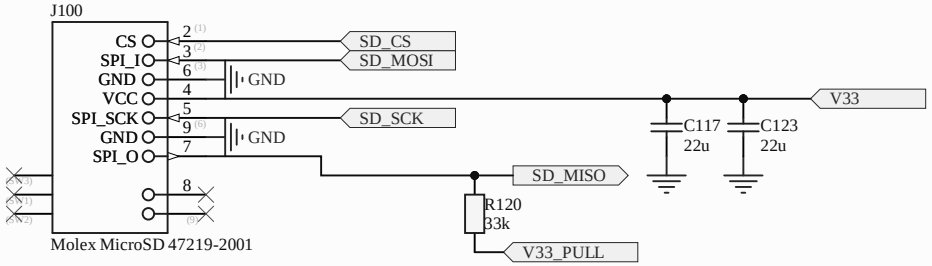
J100
CS
SPI_I
GND
VCC
SPI_SCK
GND
SPI_O
2
3
6
4
5
9
7
8
GND
GND
SD_CS
SD_MOSI
SD_SCK
SD_MISO
V33
C117
22u
C123
22u
R120
33k
V33_PULL
Molex MicroSD 47219-2001

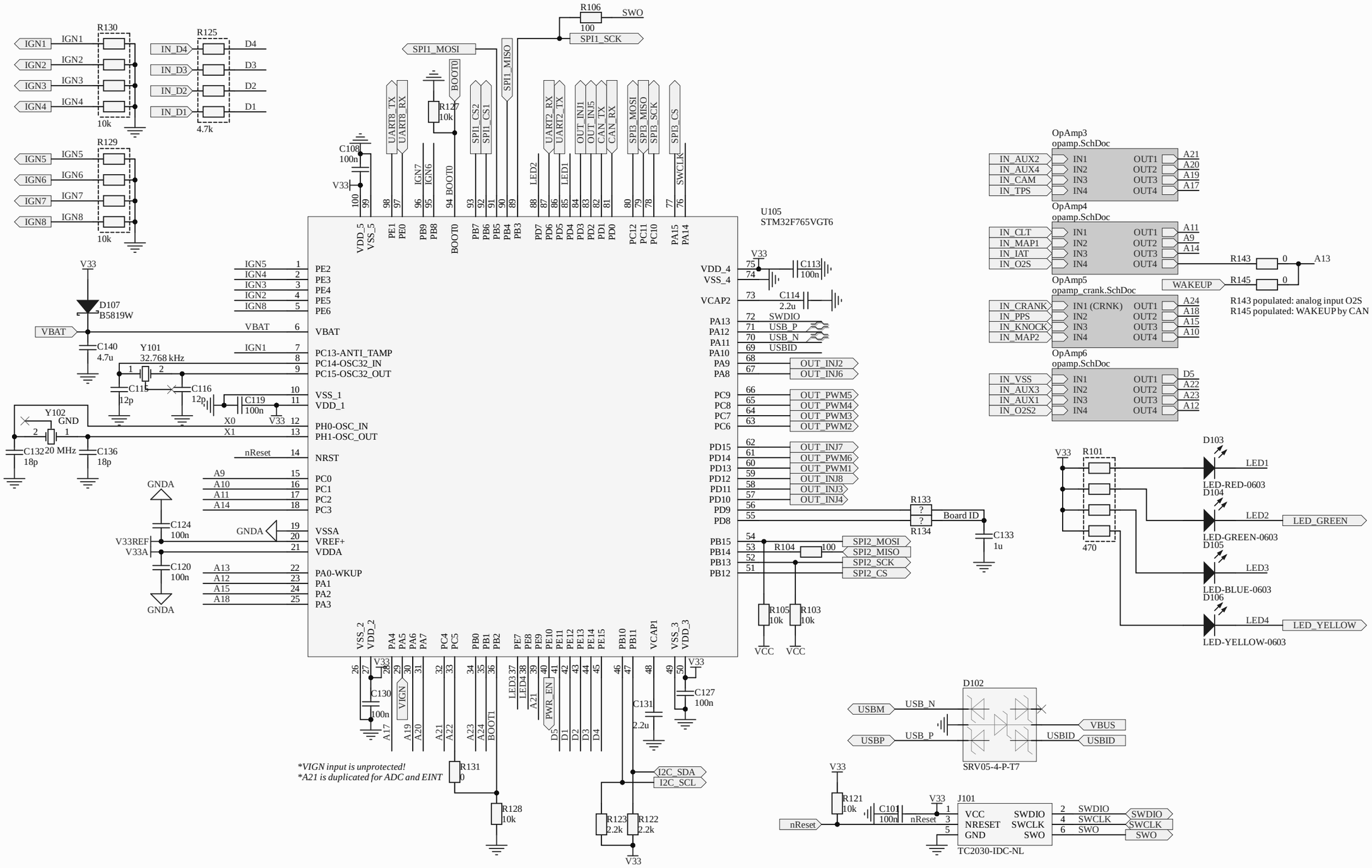
U105
STM32F765VGT6
R106
100
SWO
SPI1_SCK
SPI1_MOSI
SPI1_MISO
R127
10k
BOOT0
C108
100n
V33
R130
R125
R129
10k
4.7k
IGN1
IGN2
IGN3
IGN4
IGN5
IGN6
IGN7
IGN8
IN_D4
IN_D3
IN_D2
IN_D1
D4
D3
D2
D1
D107
B5819W
VBAT
C140
4.7u
Y101
32.768 kHz
C115
12p
C116
12p
C119
100n
Y102
GND
20 MHz
C132
18p
C136
18p
GNDA
C124
100n
V33REF
V33A
C120
100n
nReset
A9
A10
A11
A14
A13
A12
A15
A18
VIGN
A17
A19
A20
A21
A22
A23
A24
PWR_EN
D5
D1
D2
D3
D4
C130
100n
C131
2.2u
C127
100n
R131
0
R128
10k
R123
2.2k
R122
2.2k
I2C_SDA
I2C_SCL
*VIGN input is unprotected!
*A21 is duplicated for ADC and EINT
VDD_4
VSS_4
VCAP2
C113
100n
C114
2.2u
SWDIO
USB_P
USB_N
USBID
OUT_INJ2
OUT_INJ6
OUT_PWM5
OUT_PWM4
OUT_PWM3
OUT_PWM2
OUT_INJ7
OUT_PWM6
OUT_PWM1
OUT_INJ8
OUT_INJ3
OUT_INJ4
R133
R134
Board ID
C133
1u
R104
100
SPI2_MOSI
SPI2_MISO
SPI2_SCK
SPI2_CS
R105
10k
R103
10k
VCC
OpAmp3
opamp.SchDoc
OpAmp4
opamp.SchDoc
OpAmp5
opamp_crank.SchDoc
OpAmp6
opamp.SchDoc
IN_AUX2
IN_AUX4
IN_CAM
IN_TPS
IN_CLT
IN_MAP1
IN_IAT
IN_O2S
IN_CRANK
IN_PPS
IN_KNOCK
IN_MAP2
IN_VSS
IN_AUX3
IN_AUX1
IN_O2S2
IN1
IN2
IN3
IN4
IN1 (CRNK)
OUT1
OUT2
OUT3
OUT4
A21
A20
A19
A17
A11
A9
A14
A24
A18
A15
A10
D5
A22
A23
A12
R143
0
A13
WAKEUP
R145
R143 populated: analog input O2S
R145 populated: WAKEUP by CAN
D103
D104
D105
D106
LED1
LED2
LED3
LED4
LED-RED-0603
LED-GREEN-0603
LED-BLUE-0603
LED-YELLOW-0603
LED_GREEN
LED_YELLOW
R101
470
D102
SRV05-4-P-T7
USBM
USBP
VBUS
USBID
R121
10k
C101
100n
J101
VCC
NRESET
GND
SWDIO
SWCLK
SWO
TC2030-IDC-NL

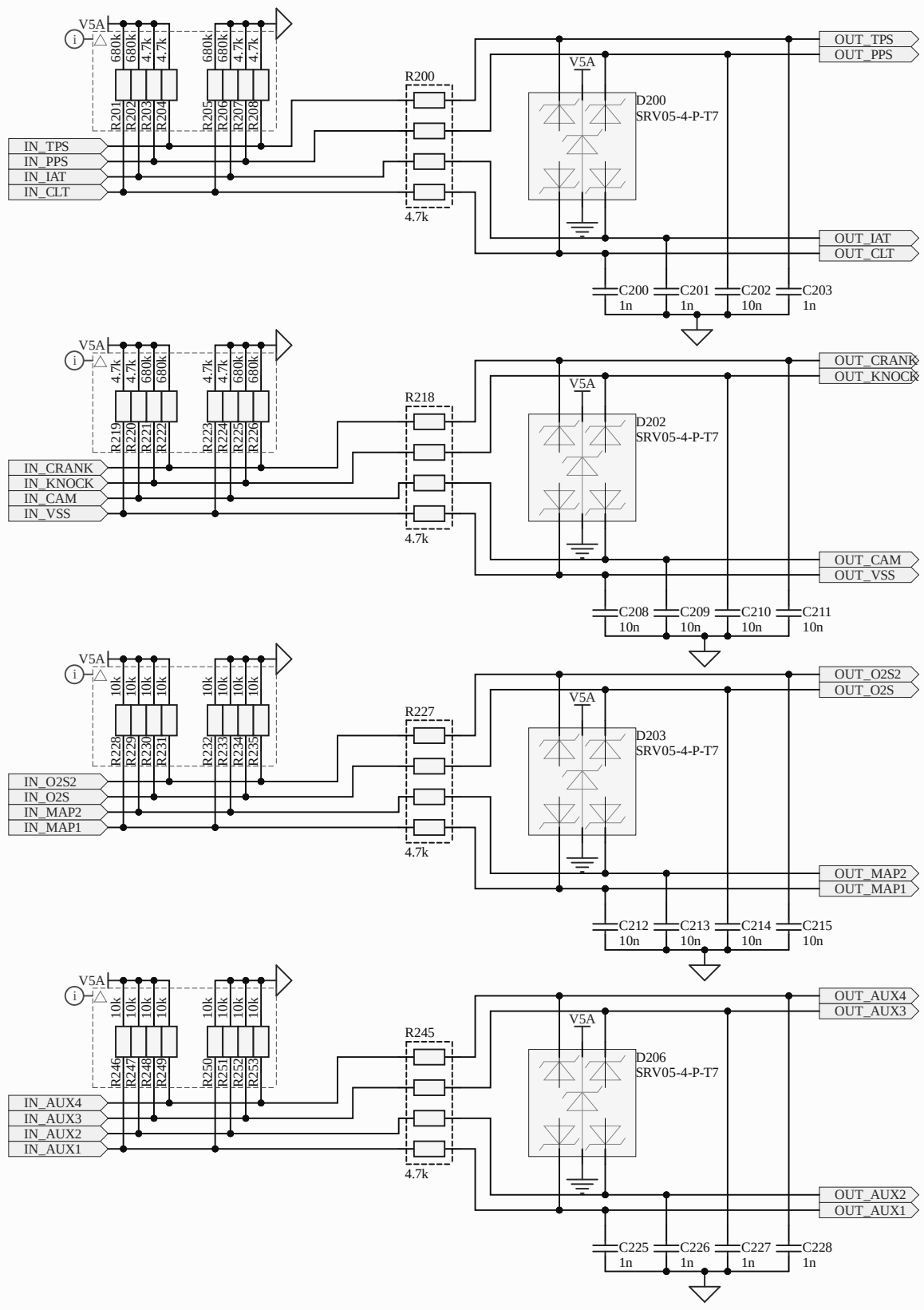
V5A
680k
4.7k
R201
R202
R203
R204
R205
R206
R207
R208
IN_TPS
IN_PPS
IN_IAT
IN_CLT
R200
4.7k
D200
SRV05-4-P-T7
OUT_TPS
OUT_PPS
OUT_IAT
OUT_CLT
C200 1n
C201 1n
C202 10n
C203 1n
R219
R220
R221
R222
R223
R224
R225
R226
IN_CRANK
IN_KNOCK
IN_CAM
IN_VSS
R218
D202
SRV05-4-P-T7
OUT_CRANK
OUT_KNOCK
OUT_CAM
OUT_VSS
C208 10n
C209 10n
C210 10n
C211 10n
10k
R228
R229
R230
R231
R232
R233
R234
R235
IN_O2S2
IN_O2S
IN_MAP2
IN_MAP1
R227
D203
SRV05-4-P-T7
OUT_O2S2
OUT_O2S
OUT_MAP2
OUT_MAP1
C212 10n
C213 10n
C214 10n
C215 10n
R246
R247
R248
R249
R250
R251
R252
R253
IN_AUX4
IN_AUX3
IN_AUX2
IN_AUX1
R245
D206
SRV05-4-P-T7
OUT_AUX4
OUT_AUX3
OUT_AUX2
OUT_AUX1
C225 1n
C226 1n
C227 1n
C228 1n

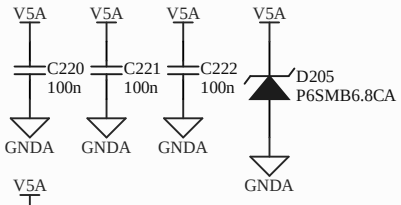
V5A
C220 100n
C221 100n
C222 100n
D205
P6SMB6.8CA
GNDA

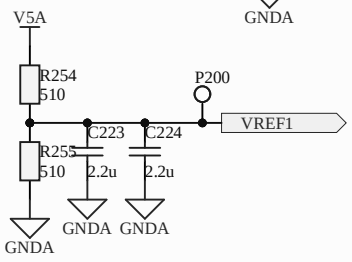
V5A
R254 510
R255 510
P200
VREF1
C223 2.2u
C224 2.2u
GNDA

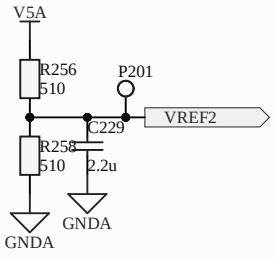
V5A
R256 510
R258 510
P201
VREF2
C229 2.2u
GNDA

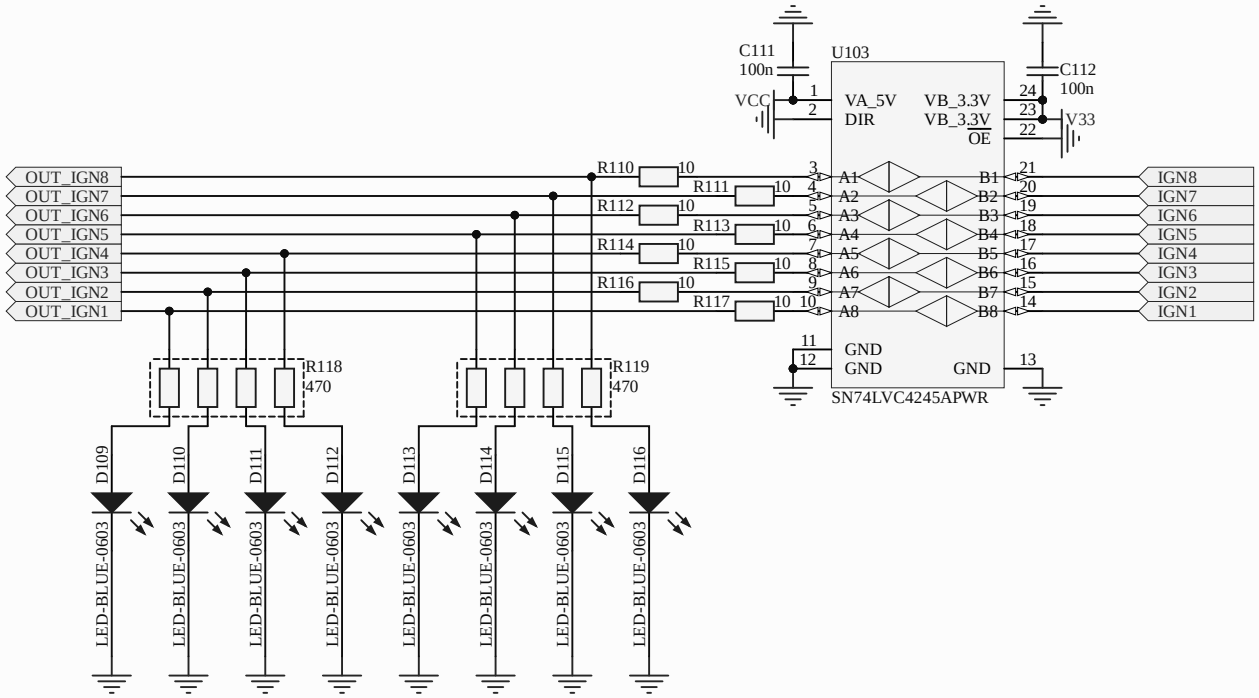
U103
SN74LVC4245APWR
C111
100n
C112
100n
VCC
V33
VA_5V
DIR
VB_3.3V
VB_3.3V
OE
GND
GND
GND
A1
A2
A3
A4
A5
A6
A7
A8
B1
B2
B3
B4
B5
B6
B7
B8
OUT_IGN8
OUT_IGN7
OUT_IGN6
OUT_IGN5
OUT_IGN4
OUT_IGN3
OUT_IGN2
OUT_IGN1
IGN8
IGN7
IGN6
IGN5
IGN4
IGN3
IGN2
IGN1
R110
R111
R112
R113
R114
R115
R116
R117
R118
470
R119
470
D109
D110
D111
D112
D113
D114
D115
D116
LED-BLUE-0603

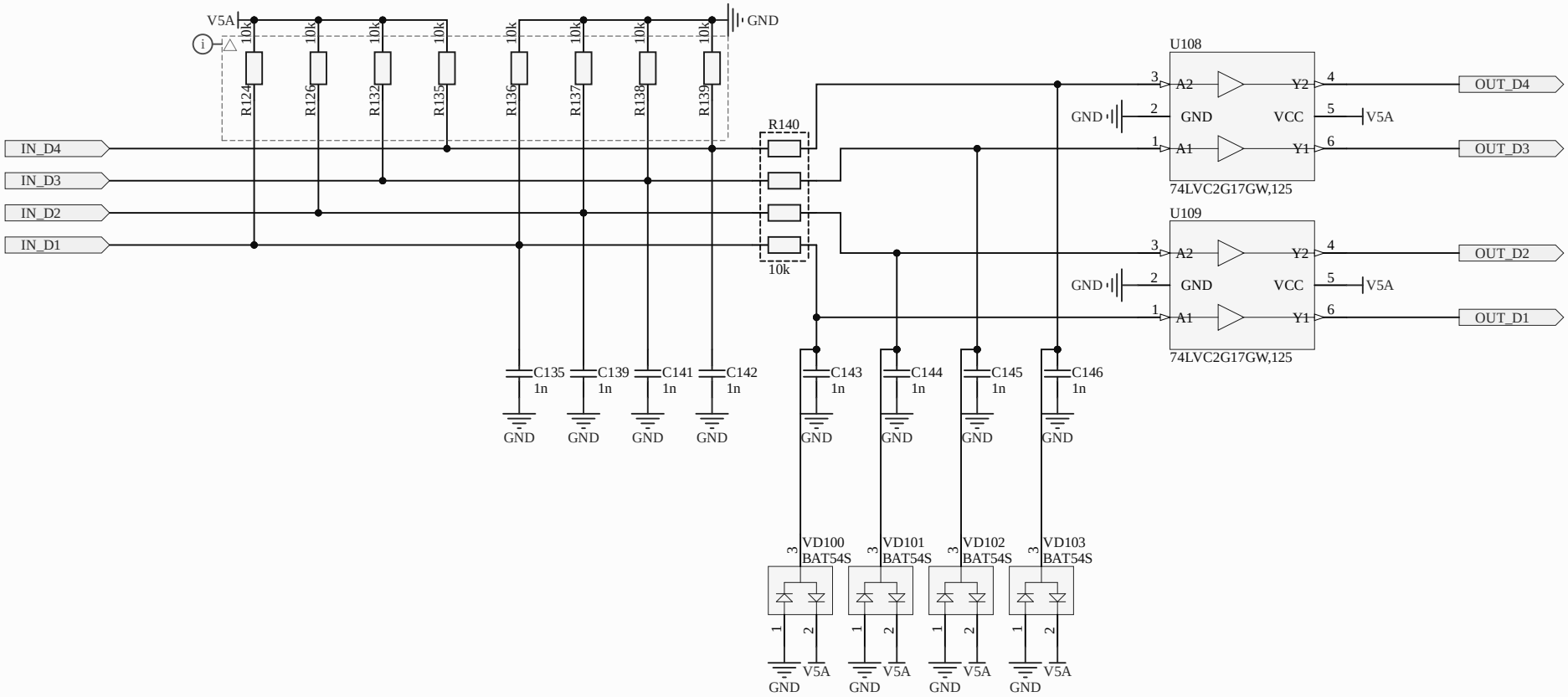
V5A
GND
R124 10k
R126 10k
R132 10k
R135 10k
R136 10k
R137 10k
R138 10k
R139 10k
R140
10k
IN_D4
IN_D3
IN_D2
IN_D1
U108
A2
GND
A1
Y2
VCC
Y1
74LVC2G17GW,125
OUT_D4
OUT_D3
U109
OUT_D2
OUT_D1
C135 1n
C139 1n
C141 1n
C142 1n
C143 1n
C144 1n
C145 1n
C146 1n
VD100 BAT54S
VD101 BAT54S
VD102 BAT54S
VD103 BAT54S

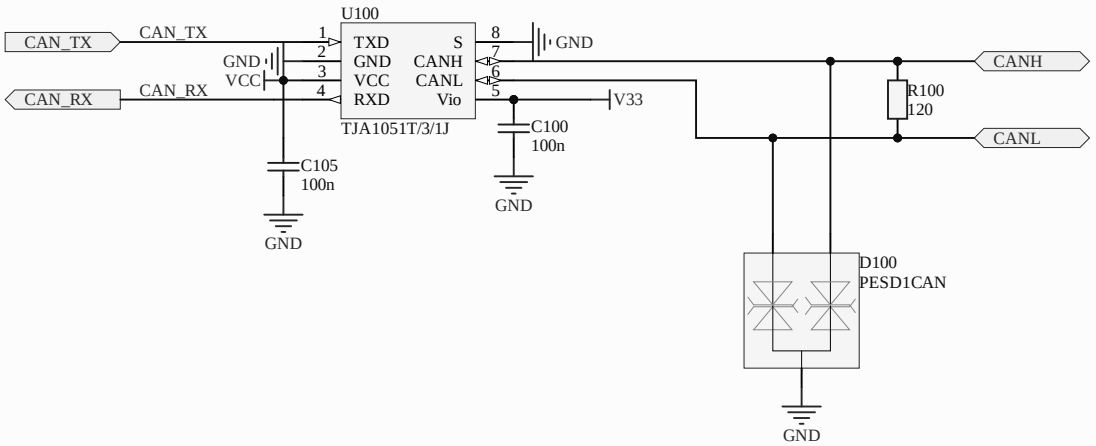
U100
CAN_TX
CAN_TX
CAN_RX
CAN_RX
GND
VCC
1
2
3
4
TXD
GND
VCC
RXD
S
CANH
CANL
Vio
8
7
6
5
GND
V33
TJA1051T/3/1J
C100
100n
GND
C105
100n
GND
CANH
CANL
R100
120
D100
PESD1CAN
GND

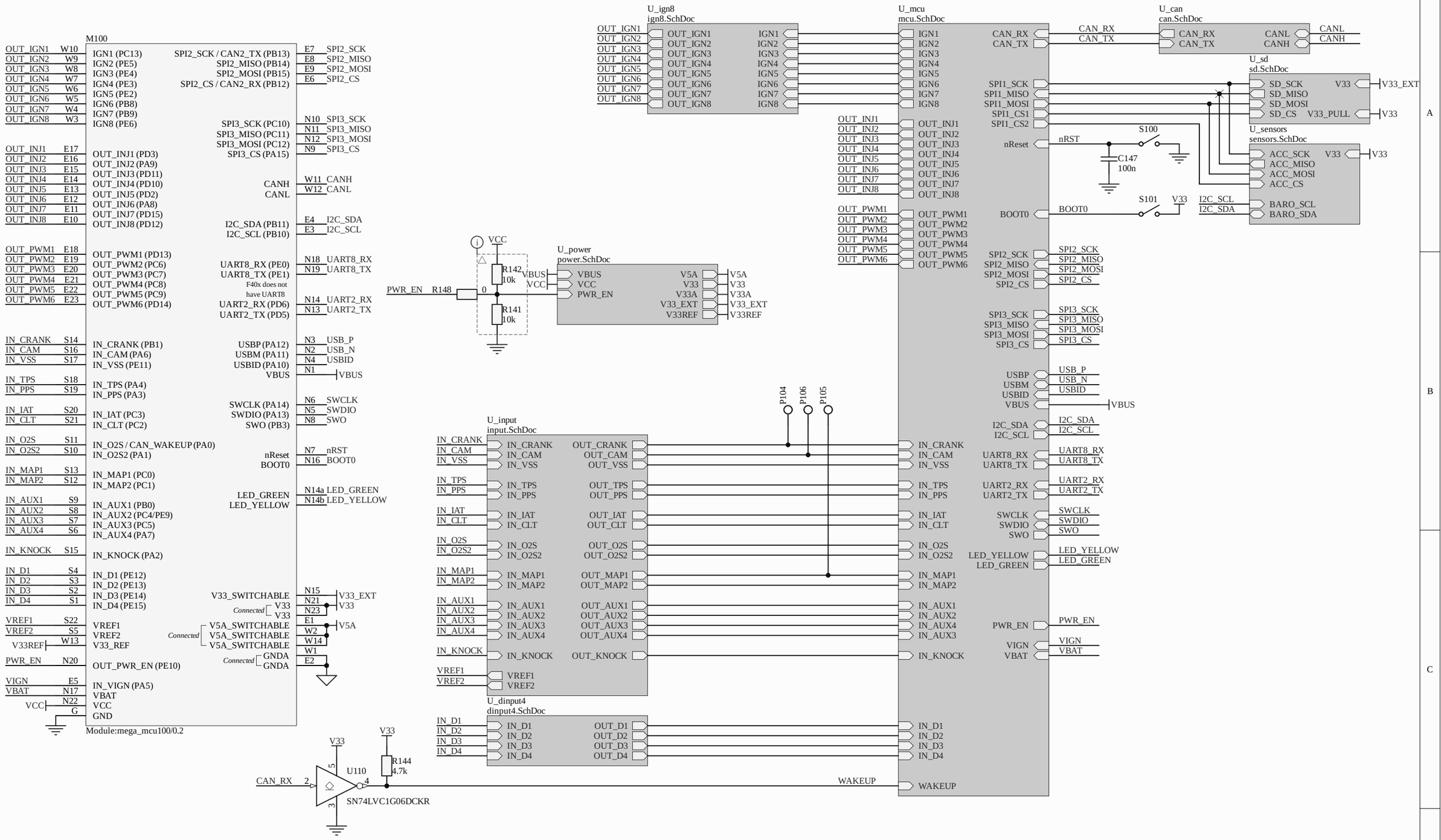
M100
Module:mega_mcu100/0.2
U_ign8
ign8.SchDoc
U_mcu
mcu.SchDoc
U_can
can.SchDoc
U_sd
sd.SchDoc
U_sensors
sensors.SchDoc
U_power
power.SchDoc
U_input
input.SchDoc
U_dinput4
dinput4.SchDoc
U110
SN74LVC1G06DCKR
R142
10k
R141
10k
R148
R144
4.7k
C147
100n
S100
S101
F40x does not have UART8
Connected

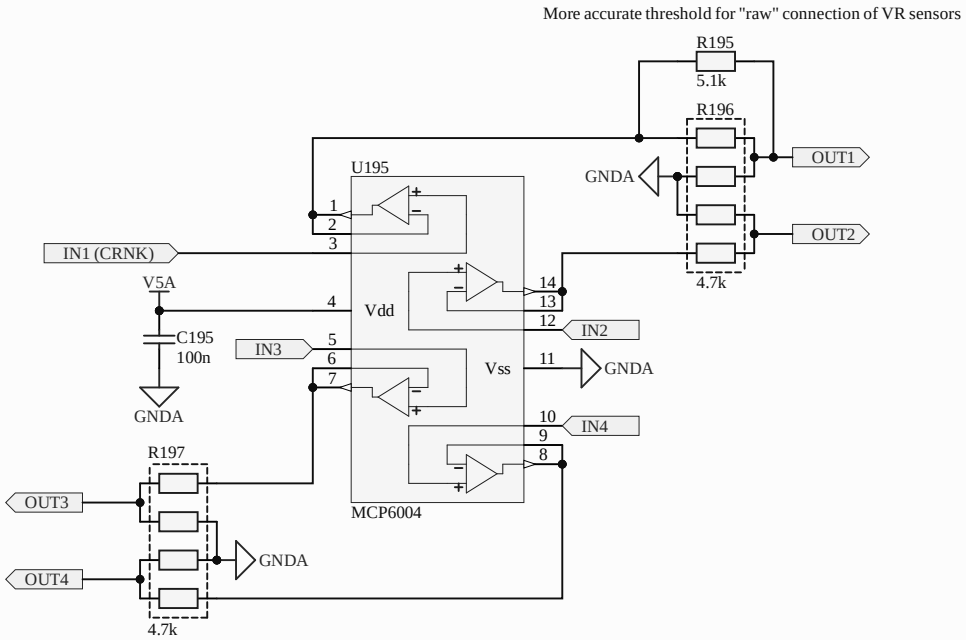
More accurate threshold for "raw" connection of VR sensors
R195
5.1k
R196
4.7k
OUT1
OUT2
GNDA
U195
IN1 (CRNK)
V5A
C195
100n
GNDA
IN3
Vdd
Vss
IN2
IN4
MCP6004
R197
4.7k
OUT3
OUT4
GNDA

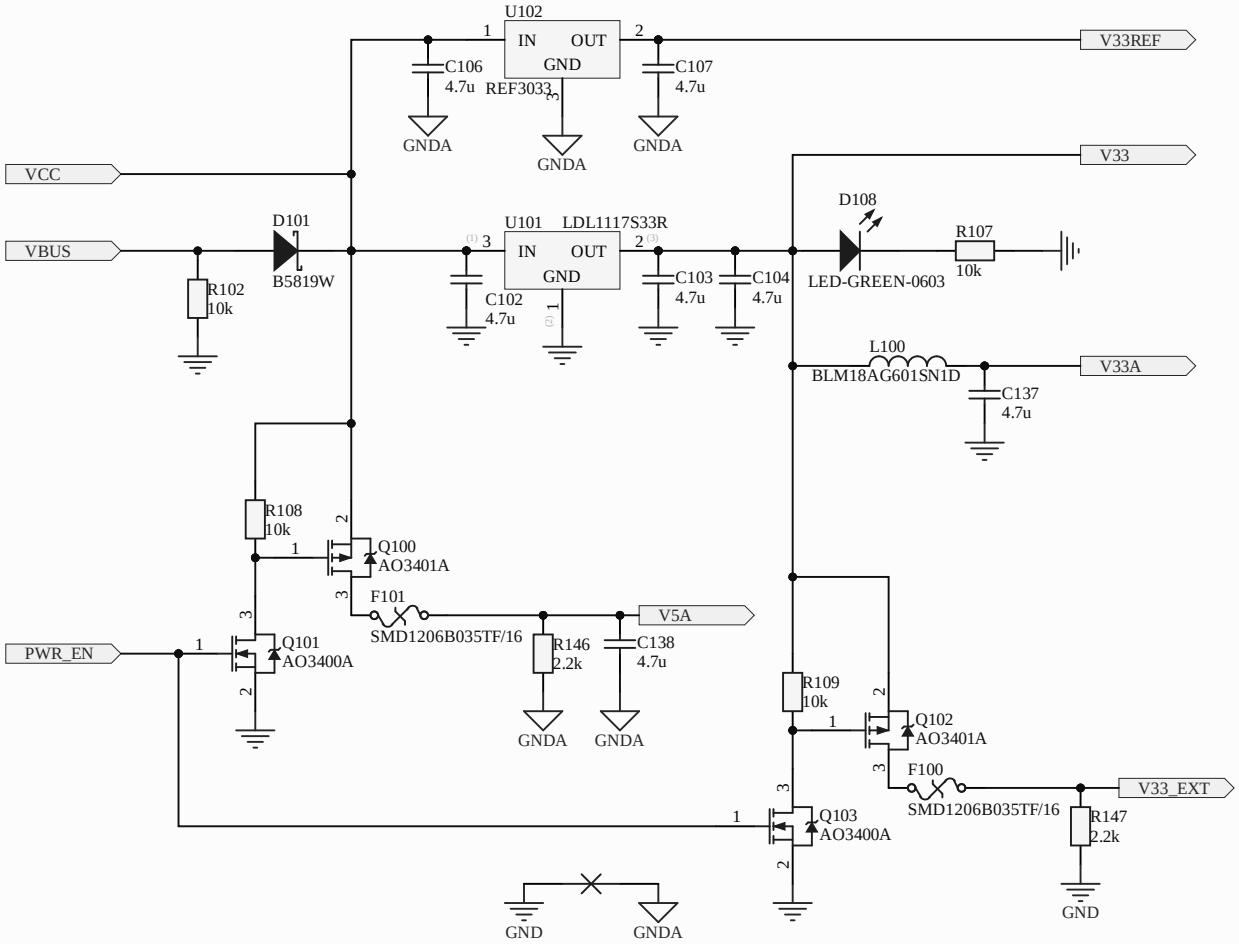

Title		
Size A4	Number	Revision
Date: 10.25.2023	Sheet of	
File: C:\Users\..\power.SchDoc	Drawn By:	

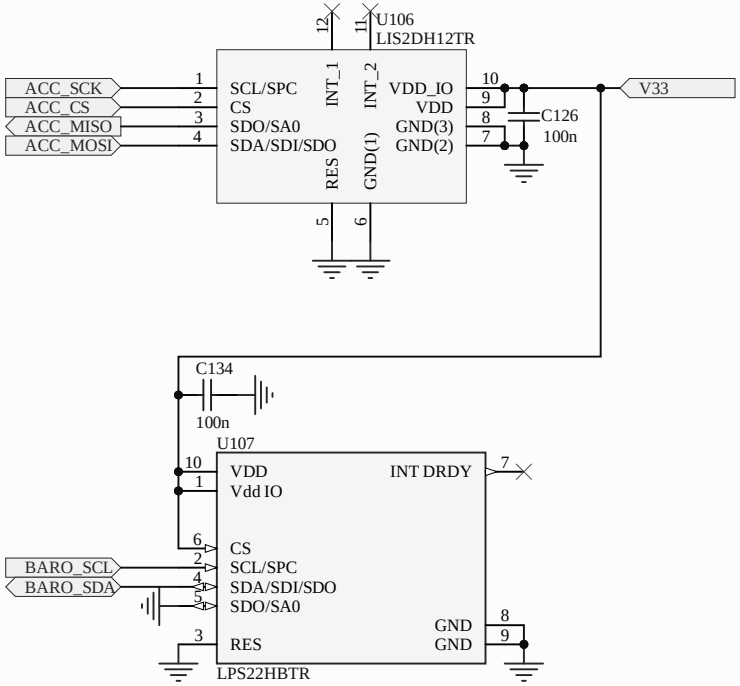
U106
LIS2DH12TR
ACC_SCK
ACC_CS
ACC_MISO
ACC_MOSI
SCL/SPC
CS
SDO/SA0
SDA/SDI/SDO
INT_1
INT_2
RES
GND(1)
VDD_IO
VDD
GND(3)
GND(2)
V33
C126
100n
C134
100n
U107
VDD
Vdd IO
INT DRDY
CS
SCL/SPC
SDA/SDI/SDO
SDO/SA0
RES
GND
GND
BARO_SCL
BARO_SDA
LPS22HBTR