Open-RAN Architecture, Functional Splits, Interfaces and Security

Supervisor: Dr. Chatura Seneviratne
Co-Supervisor 1: Prof. Dr. An Braeken
Co-Supervisor 2: Mr. Pramitha Fernando

EG/2021/4474 Dewmith M.K.J.
EG/2021/4485 Dilshan M.D.K.
EG/2021/4807 Sewinda L.L.D.
EG/2021/4832 Thilohith T.K.

08/12/2025

CONTENT

01 | O-RAN Architecture

02 | Functional Split Options

03 | Functional Split 7.2x

04 | Open Fronthaul Explained

05 | O-RAN Interfaces

06 | Security in O-RAN

PART 01

O-RAN Architecture

Overall Architecture of O-RAN

The overall O-RAN architecture provides a high-level view showing the connections between the **Service Management and Orchestration (SMO) framework, O-RAN Network Functions (NFs) and the O-Cloud.**

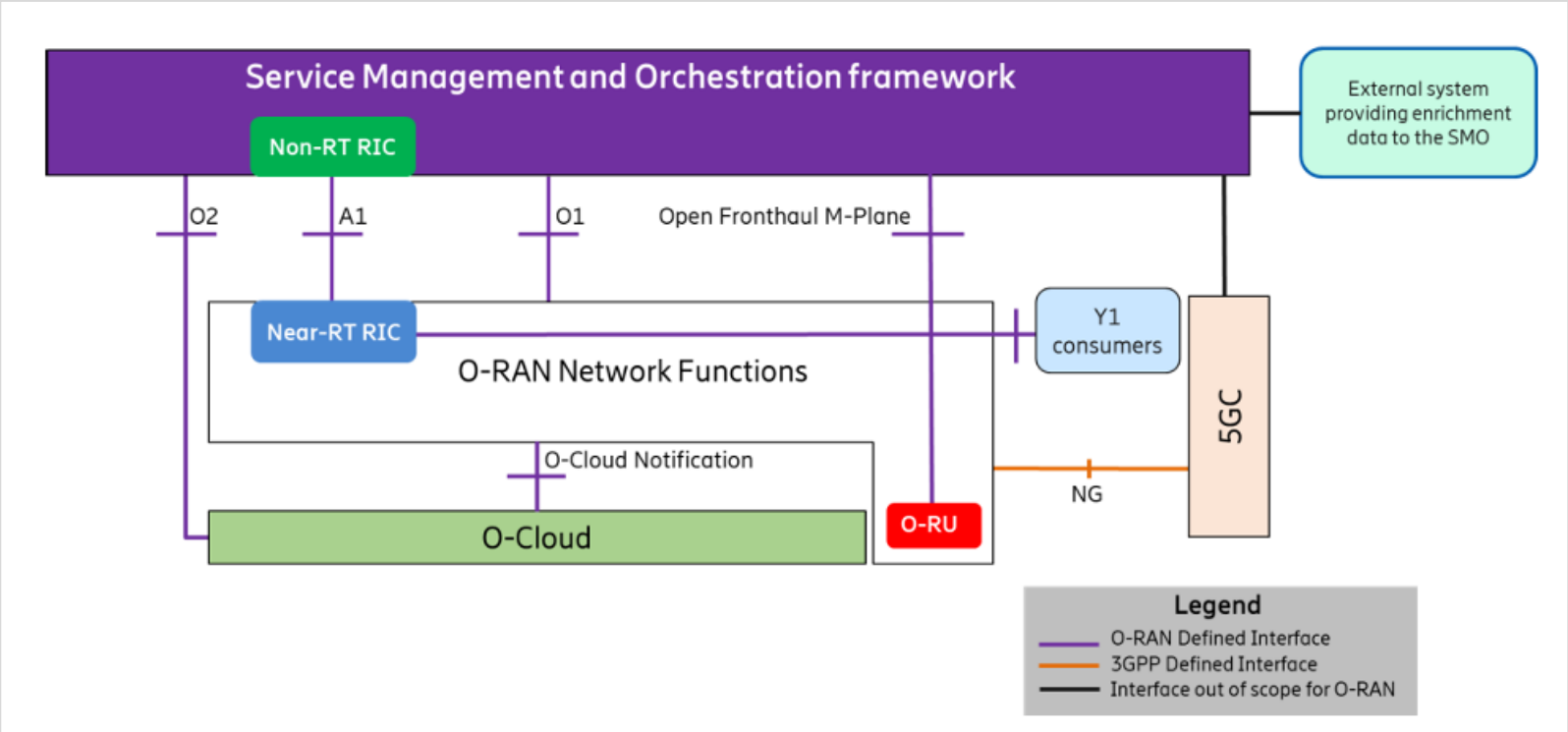

Figure 1: High Level Architecture of O-RAN [1]

Key Connections & Deployments

The key interfaces connecting the above elements are **A1, O1, Open Fronthaul M plane** and **O2**. The O-Cloud includes the **O-Cloud Notification interface**, which is available for relevant O-RAN NFs (such as Near-RT RIC, O-CU-CP, O-CU-UP and O-DU) to receive notifications related to the O-Cloud.

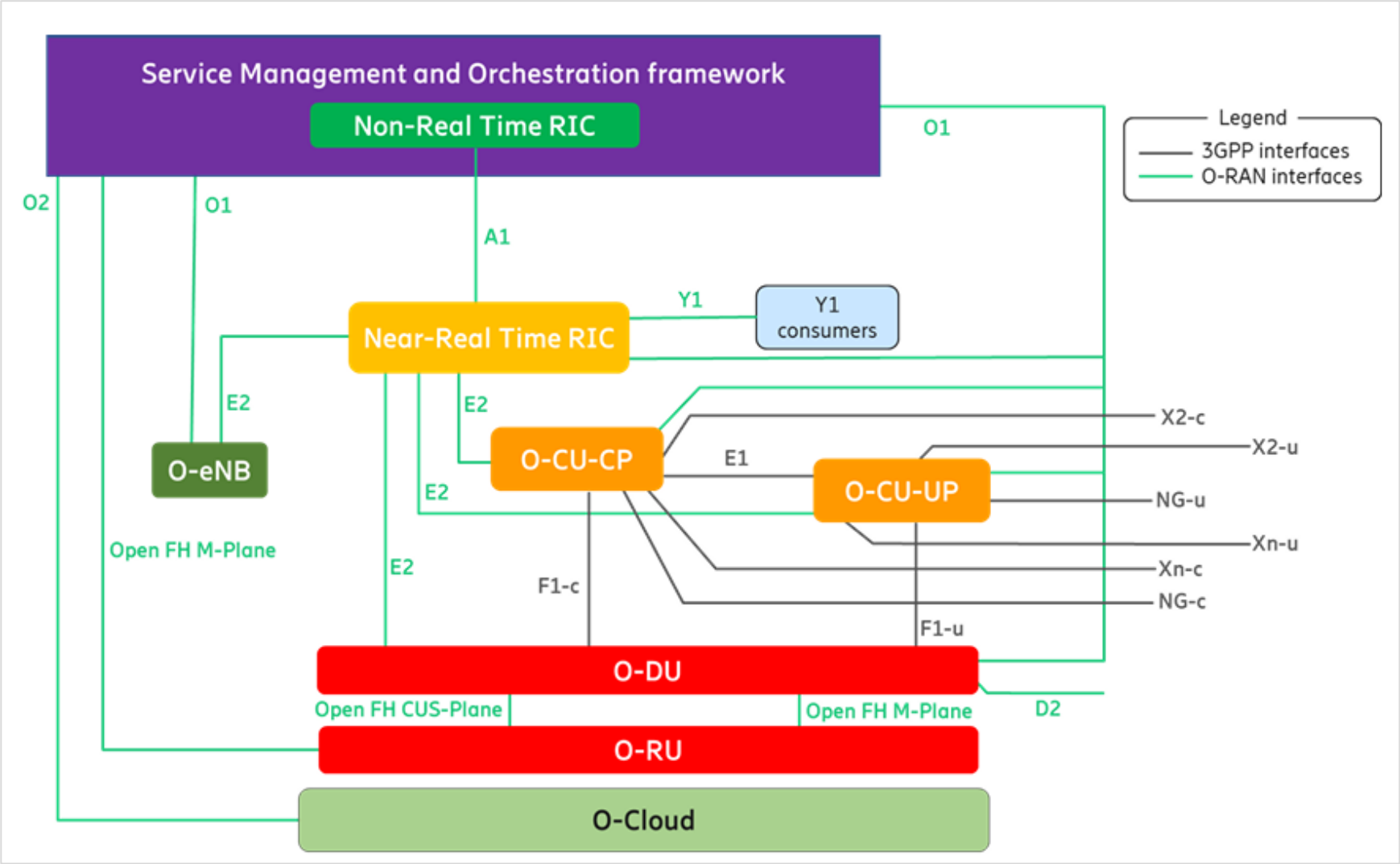

Figure 2: Logical Architecture of O-RAN [1]

Key Connections & Deployments

O-RAN NFs can be instantiated on the **O-Cloud** or on **customized** hardware. All O-RAN NFs, with the exception of the O-RU, are managed via the **O1 interface** by an authorized SMO framework. The **Open Fronthaul M-plane interface** supports O-RU management when operating in **hybrid mode** between the SMO and the O-RU.

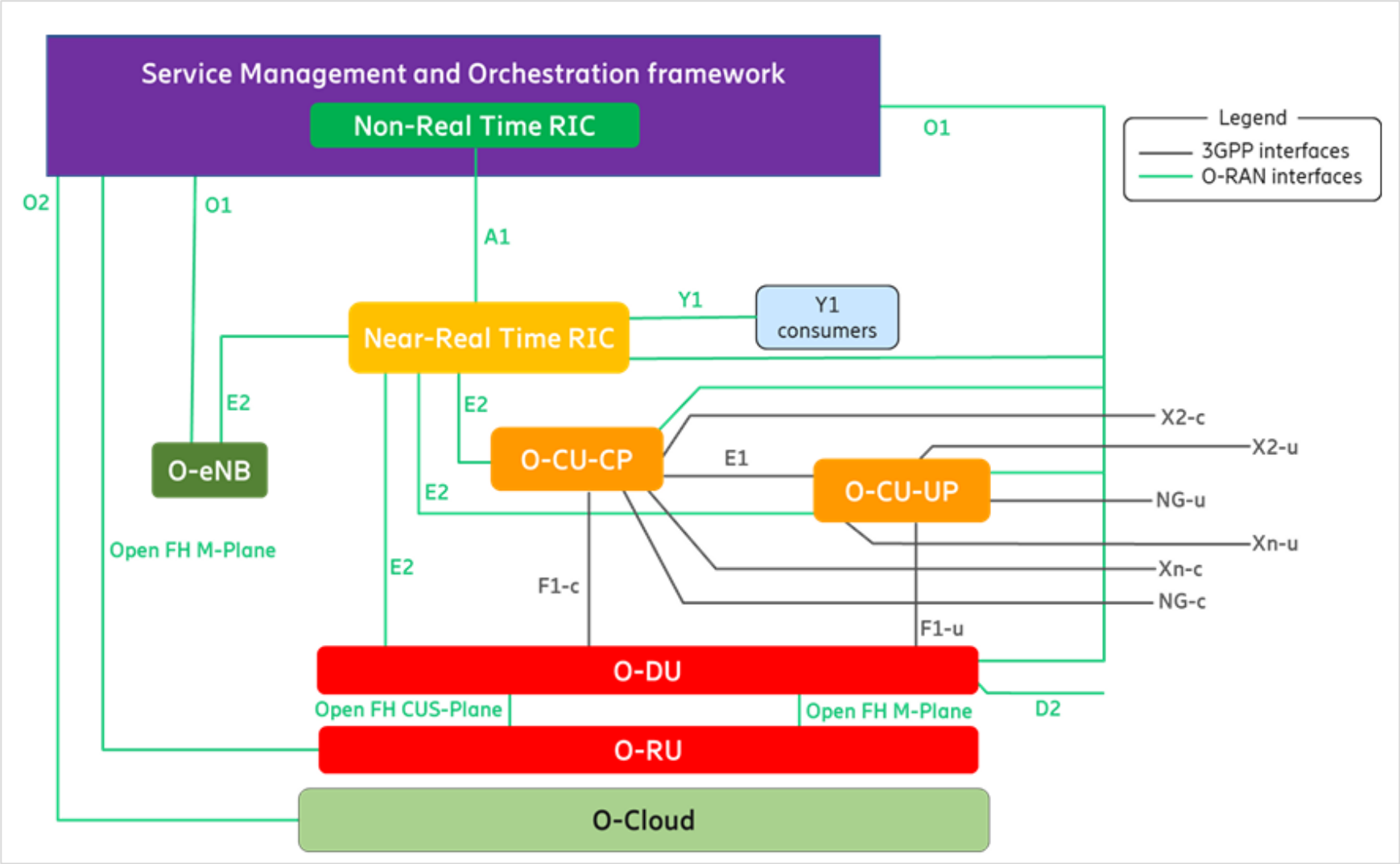

Figure 2: Logical Architecture of O-RAN [1]

Key Connections & Deployments

The logical architecture shows that the radio side includes the **Near-RT RIC, O-CU-CP, O-CU-UP, O-DU, and O-RU O-RAN NFs**. The **D2 interface** connects the O-DU with a peer O-DU for supporting inter O-DU carrier aggregation. The Near-RT RIC exposes **RAN analytics information services** via the **Y1 service interface** to Y1 consumers.

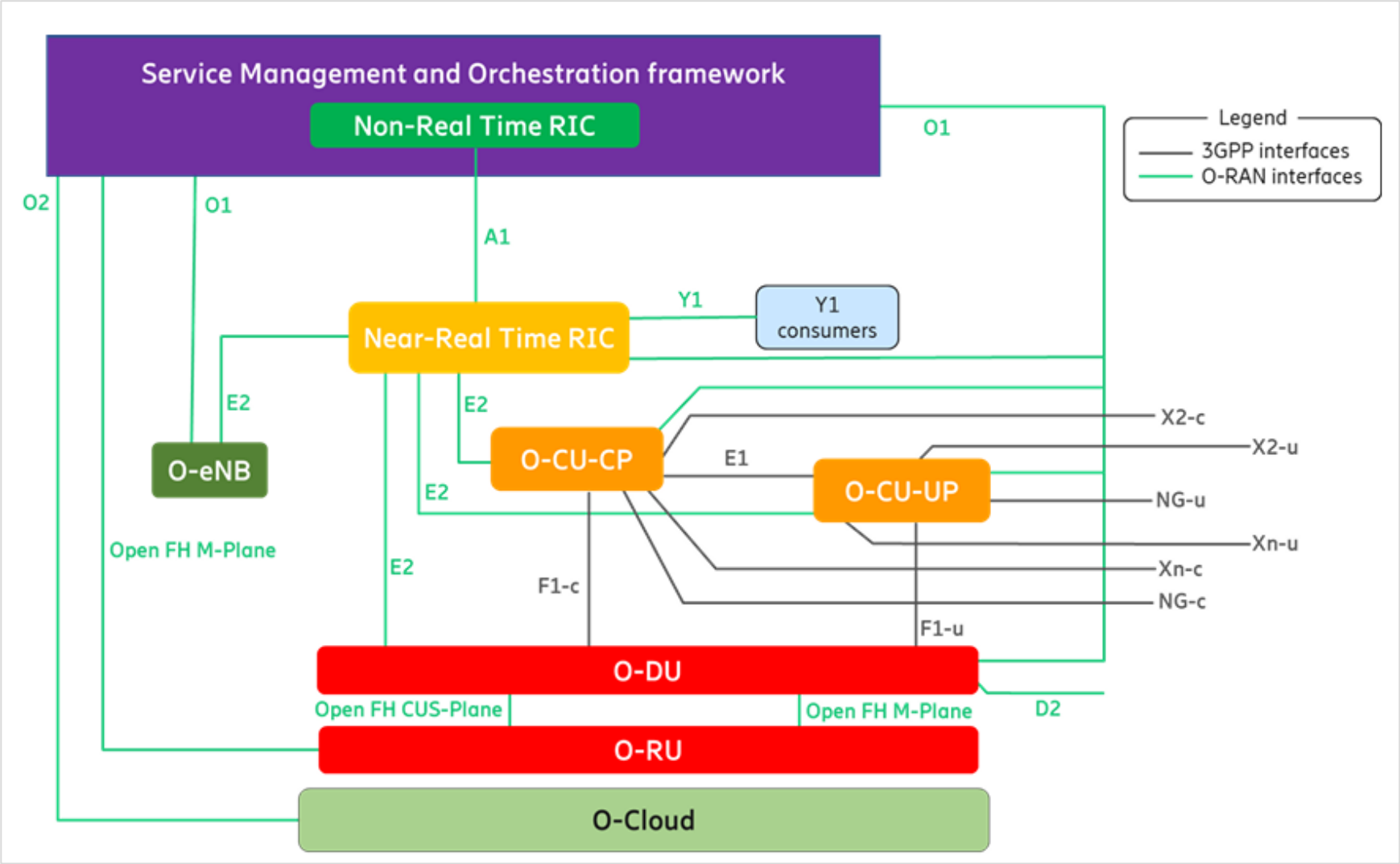

Figure 2: Logical Architecture of O-RAN [1]

O-RAN Control Loops

The O-RAN architecture supports at least three categories of control loops. These loops are differentiated by the controlling entity and their typical execution time.

Control Loop Type	Controlling Entity/Location	Typical Execution Time
Non-Real Time	Non-RT RIC and/or SMO management plane processes	1 second or more
Near-Real Time	Near-RT RIC	10 Milliseconds to 1 second
Real Time	E2 Nodes (e.g., O-DU for radio scheduling, HARQ, beamforming)	Can operate below 10 milliseconds

Control loops exist at various levels and run simultaneously, and their interactions are defined by the use cases. For a stable solution, the loop time in the Non-RT RIC and/or SMO management plane processes should be significantly longer than the loop time for the same use case in the control entities.

O-RAN NFs and O-RAN nodes are used interchangeably, and they always refer to a **logical entity** rather than a physical or cloudified instantiation.

Service Management & Orchestration Framework (SMO)

- The SMO is responsible for RAN domain management.
- The SMO is defined using a Service Based Architecture (SBA), which specifies logical functions in their service producer and consumer roles, enabling interoperability within the SMO.
- SMO consumes services via key southbound interfaces: A1, O1, Open FH M-Plane and O2
- The Non-RT RIC is a functionality internal to the SMO that supports intelligent RAN optimization.

Near-RT RIC

- The Near-RT RIC is an O-RAN NF that enables near real-time control and optimization of services and resources of E2 Nodes via fine-grained data collection and actions over the E2 interface.
- It operates with control loops in the order of 10ms to 1s.
- It hosts one or more xApps which use Near-RT RIC APIs for functionality.
- Its control over E2 Nodes is steered via policies and enrichment data provided by A1 from the Non-RT RIC.
- It generates the RAN analytics information and exposes it via the Y1 interface.
- The Near-RT RIC is composed of a Near-RT RIC platform (which supports A1, E2, Y1 and O1 interfaces) and one or more xApps.

O-CU-CP

- A logical node hosting the RRC and the control plane part of the PDCP protocol (for SRB).
- It terminates the NG-c, X2-c, Xn-c, F1-c and E1 interfaces.
- It terminates the E2 interface to the Near-RT RIC.
- It is managed via the O1 interface by the SMO.

O-CU-UP

- A logical node hosting the user plane part of the PDCP protocol and the SDAP protocol.
- It terminates the NG-u, X2-u, S1-u, Xn-u, F1-u and E1 interfaces.
- It terminates the E2 interface to the Near-RT RIC.
- It is managed via the O1 interface by the SMO.

O-DU

- A logical node that , when combined with one or more O-RUs, is fully compatible with the functions of a gNB-DU as defined by 3GPP.
- It hosts RLC, MAC and High-PHY layers based on a lower layer functional split.
- It terminates the E2, F1 and Open Fronthaul (LLS) interfaces.
- It terminates the D2 interface towards a peer O-DU to support inter O-DU NR carrier aggregation.
- It may support the Cooperative Transport Interface (CTI) toa Transport Node (TN) to control UL bandwidth allocation on shared point-to-multipoint transport networks (like PON or DOCSIS).
- It terminates the Open Fronthaul M-Plane interface towards the O-RU for O-RU management in either hierarchical or hybrid mode.

O-RAN Architecture Elements

O-RU

- A logical node deployed as a PNF (Physical Network Function).
- It hosts the Low-PHY layer and RF processing based on a lower layer functional split.
- It terminates the Open Fronthaul interface (LLS interface).
- It terminates the Open Fronthaul M-Plane interface towards the O-DU and SMO.

O-eNB

- O-RAN O-eNB (LTE): Terminates S1, X2, O1 and E2 interfaces and the RRC, PDCP, RLC, MAC and PHY layers of the LTE-Uu radio interface.
- O-RAN ng-eNB (NR/LTE): Terminates NG, Xn, O1 and E2 interfaces and the RRC. SDAP, NR PDCP, MAC and PHY layers of the LTE-Uu radio interface.
- The O-eNB supports O-DU and O-RU O-RAN NFs with an Open Fronthaul interface between them.

O-Cloud

- The O-Cloud is a cloud computing platform comprising physical infrastructure nodes that meet O-RAN requirements.
- It hosts relevant O-RAN NFs (e.g., Near-RT RIC, O-CU-CP, O-CU-UP and O-DU) and supporting software components (Operating System, VMM, Container Runtime, etc.).
- It exposes the O2 interface for cloud and workload management, providing O2 deployment management services (O2dms) and O2 infrastructure management services (O2ims).
- It exposes the O-RAN AAL API towards hosted O-RAN workloads for hardware accelerator management.
- It exposes the O-Cloud Notification interface towards hosted workloads to notify them of critical events (e.g., PTP synchronization states).

PART 02

Functional Split Options

The Concept: CU-DU Split

The New Radio (NR) architecture supports flexibility in deployment by splitting the gNB functions between a Central Unit (CU) and a Distributed Unit (DU).

Central Unit (CU): A logical node hosting gNB functions (upper layers) that controls the operation of DUs.

Distributed Unit (DU): A logical node hosting a subset of gNB functions (lower layers), controlled by the CU.

Motivation

This architecture enables Network Function Virtualization (NFV) and allows operators to place functions based on:

- Specific use cases (e.g., low latency vs high throughput)
- Transport network performance
- User density

Detailed Functional Split Options

3GPP TR 38.801 (Study on new radio access technology: Radio access architecture and interfaces) technical report analyzes eight specific options for splitting the protocol stack (RRC, PDCP, RLC, MAC, PHY, RF between the CU and DU).

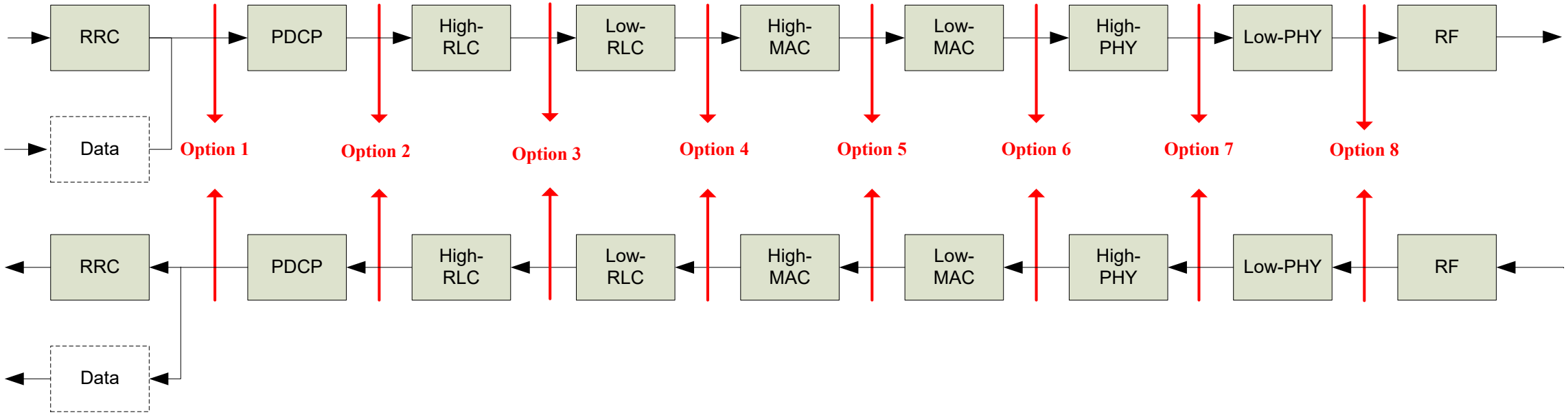

Figure 3: Function Split between Central and Distributed Unit [2]

Detailed Functional Split Options

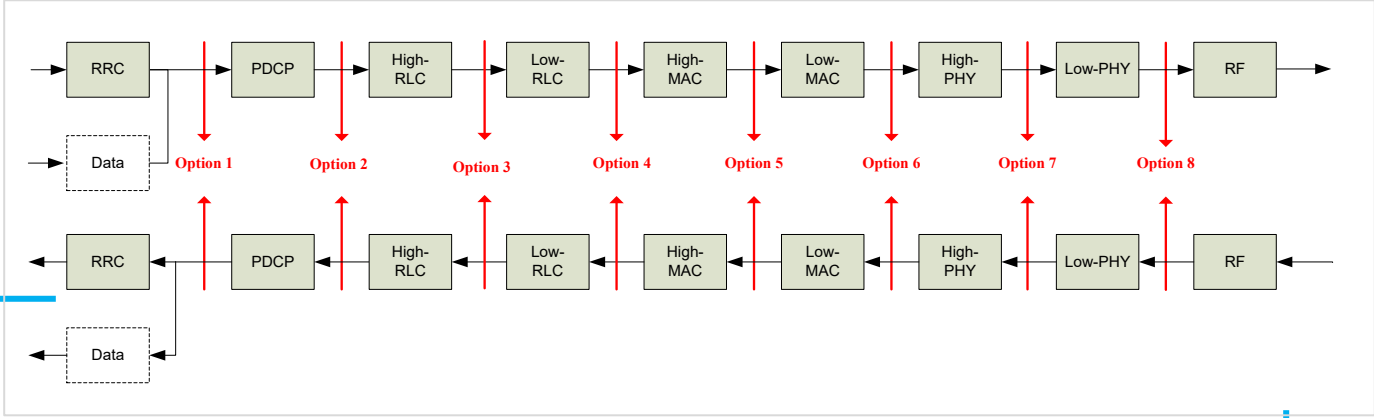

Option 1 (RRC-PDCP Split/ 1A-like split):

- **CU**: RRC (control plane only) | **DU**: PDCP, RLC, MAC, PHY, RF
- **Key Aspect**: Separates the user plane (UP) entirely from the control plane (CP), the entire user plane resides in the DU
- **Pros**: Ideal for edge computing or low latency use cases where user data must be close to the transmission point, Maintains a centralized RRC/RRM for handling mobility while keeping data local
- **Cons**: Securing the interface between RRC (CU) and PDCP (DU) may affect performance in practical deployment performances
- **Transport Specs**: Latency – Tolerant (~10ms), Bandwidth – ~4Gbps DL / 3Gbps UL

Detailed Functional Split Options

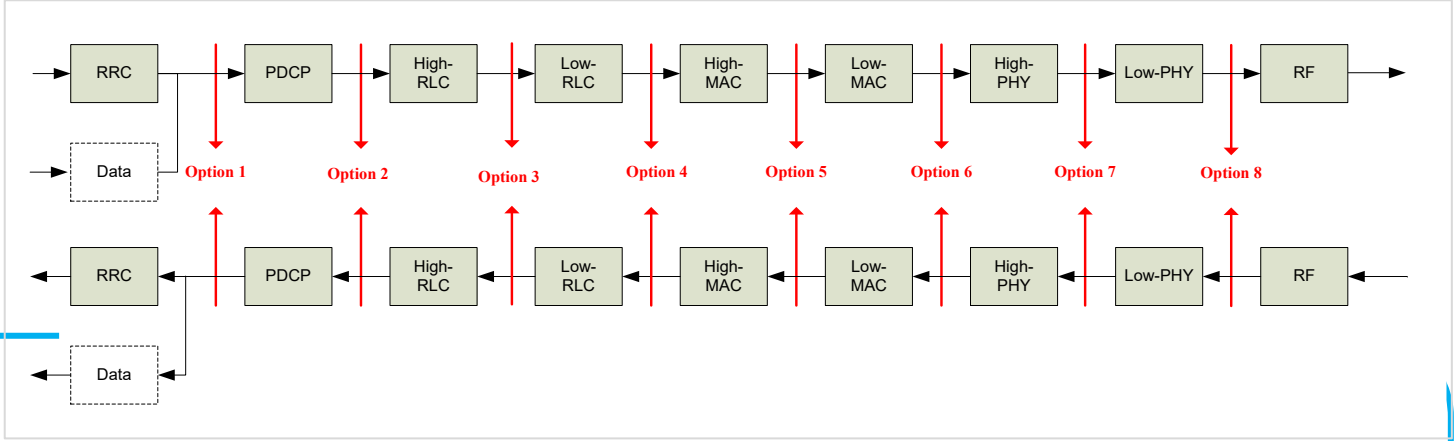

Option 2 (PDCP-RLC Split):

- **Option 2.1**: Split U-plane only (3C like split)
  - **CU**: RRC, PDCP | **DU**: RLC, MAC, PHY , RF
  - Centralizes traffic aggregation from NR and E-UTRA facilitating load management, Fundamentals are already defined in LTE making it straightforward to standardize.
- **Option 2.2: CU**: RRC, PDCP and **DU**: RLC, MAC, PHY. In addition , this option can be achieved by separating the RRC and PDCP for the CP stack and the PDCP for the UP stack into different central entities.
  - This option will allow traffic aggregation from NR and E-UTRA transmission points to be centralized. Additionally, it can facilitate the management of traffic load between NR and E-UTRA transmission points.
- **Cons:** Security configurations between different PDCP instances for Option 2-2 needs to be ensured.
- **Transport Specs:** Latency – Tolerant (1.5ms – 10ms), Bandwidth – Similar to Option 1 (~4Gbps DL)

Detailed Functional Split Options

Option 3 (Intra-RLC Split): Two options based one RT/Non-RT functions

- **Option 3-1 (ARQ Split)**: High-RLC (ARQ and other RLCs) in CU, Low-RLC (segmentation) in DU
- **Option 3-2 (TX/RX Split)**: Receiving functions in CU; Transmitting functions in DU
- **Pros**: ARQ in the CU provides centralization gains and recovery from transport network failures improving reliability, Option 3-1 offers better flow control across the split, DUs handle segmentation but do not need to store UE context (stateless)
- **Cons**: Retransmission are susceptible to transport latency, Option 3-2 requires dual buffers (one at CU for flow control, one at DU for transmission)
- **Transport Specs:** Latency – Tolerant (1.5ms – 10ms), Bandwidth – Lower than Option 2

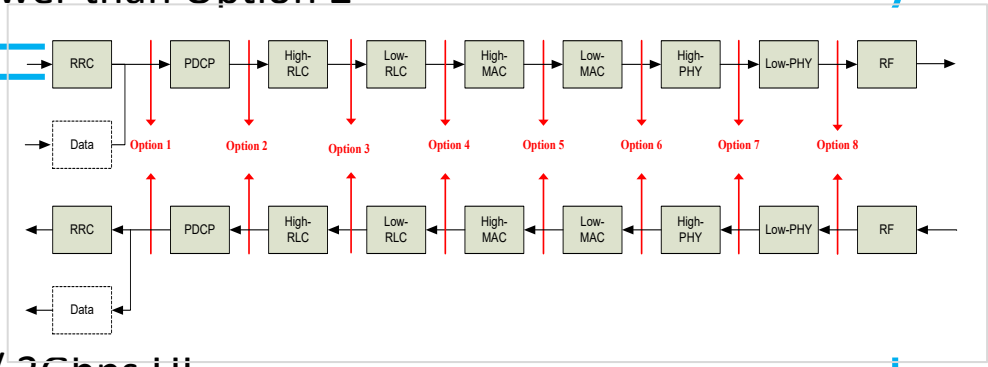

Option 4 (RLC-MAC Split):

- **CU**: RRC, PDCP, RLC | **DU**: MAC, PHY, RF
- **Key Aspect**: Splits the stack strictly between the RLC and MAC layers
- **Transport Specs:** Latency – Strict (~100us), Bandwidth – ~4Gbps DL / 3Gbps UL
- **Status**: In the context of the LTE protocol stack a benefit is not foreseen for option 4.

Detailed Functional Split Options

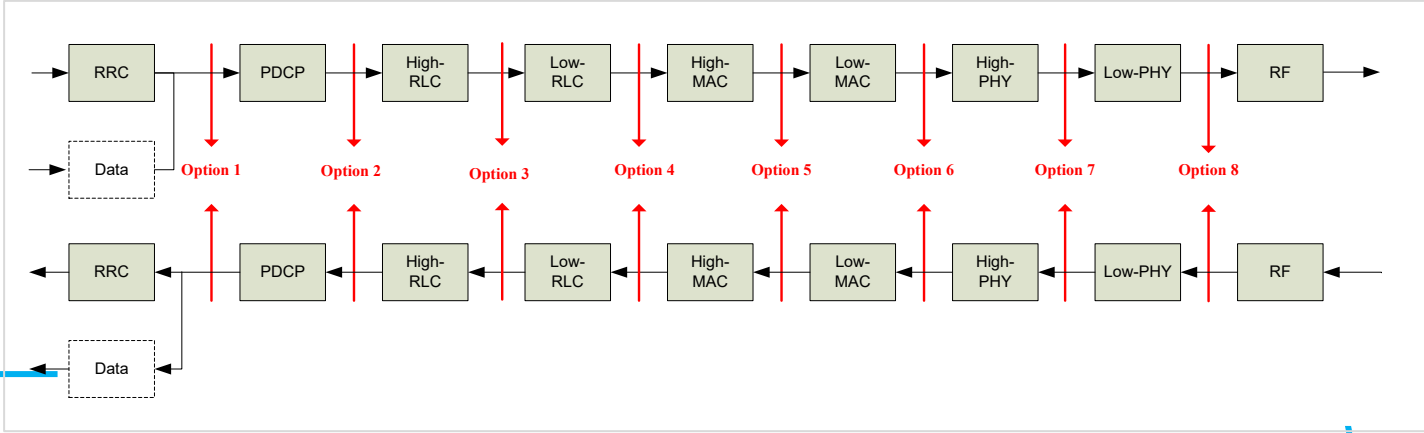

Option 5 (Intra-MAC Split):

- **CU**: High-MAC (Fns: Centralized scheduling, Inter cell interference coordination), RLC, PDCP | **DU**: Low-MAC (Fns: HARQ, Random access, Measurements), PHY , RF
- **Pros**: Enables centralized interference coordination (e.g., CoMP), Keeping time-critical functions (HARQ) in the DU reduces fronthaul latency requirements compared to Option 6
- **Cons**: Defines a complex interface between scheduling (CU) and execution (DU), Scheduling decisions in the CU are subject to fronthaul delays, potentially impacting performance in short TTI scenarios
- **Transport Specs:** Latency – Strict (hundreds of microseconds), Bandwidth – 4Gbps DL / 34Gbps UL

Detailed Functional Split Options

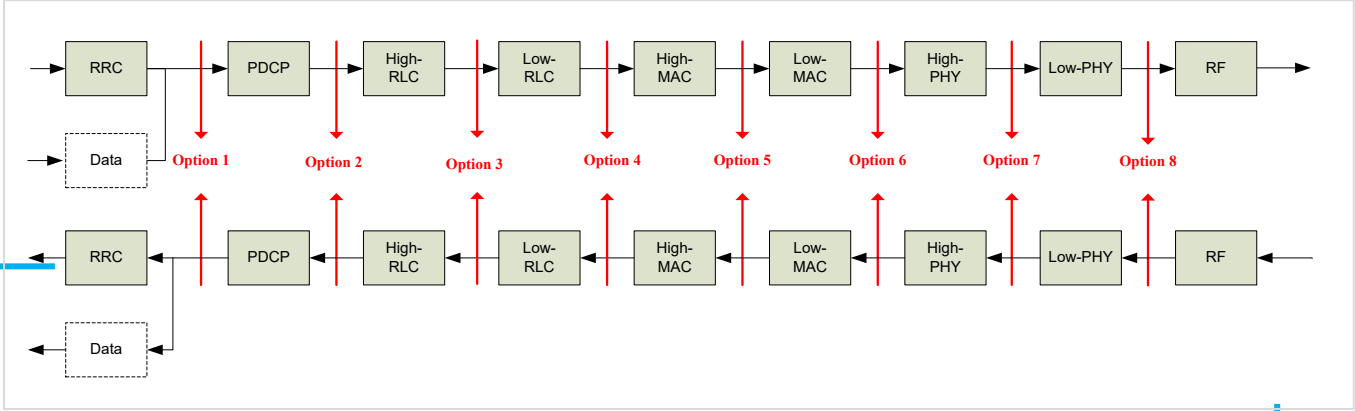

Option 6 (MAC-PHY Split):

- **CU**: MAC and all upper layers | **DU**: PHY and RF
- **Key Aspect**: The interface carries data transport blocks and scheduling information (MCS, Beamforming, Resource blocks)
- **Pros**: MAC in the CU enables Joint Transmission and centralized scheduling, Reduces bandwidth requirements to baseband bitrates (transport bits, not samples) improving efficiency, Allows pooling for all layers including and above MAC
- **Cons**: Requires tight subframe-level interactions; round-trip delay affects HARQ
- **Transport Specs:** Latency – Ultra low (250us), Bandwidth – ~4Gbps DL / 5.6 Gbps UL

Detailed Functional Split Options

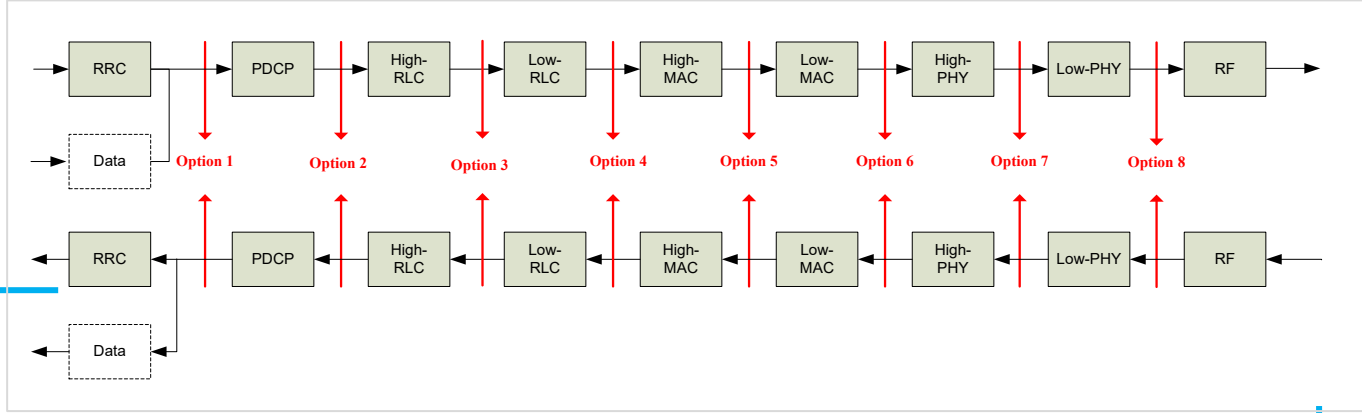

Option 7 (Intra-PHY Split):

- **7-1 Split**: In the UL,FFT,CP removal in DU, In the DL, iFFT and CP addition functions reside in the DU. Rest in CU.
- **7-2 Split**: “” and Includes pre-filtering fns. Support resource mapping/precoding in the DU
- **7-3 Split (DL only)**: Only the encoder resides in the CU, and the rest of PHY functions reside in the DU.
- **Pros**: Options 7-1 and 7-2 facilitate the implementation of advanced receivers, Option 7-3 reduces fronthaul throughput to baseband bitrates, supports Joint Processing (transmit and receive) and centralized scheduling
- **Transport Specs:** Latency – Ultra low (250us), Bandwidth – Variable. Option 7a: ~10-22Gbps, Option 7b -~37-86 Gbps

Detailed Functional Split Options

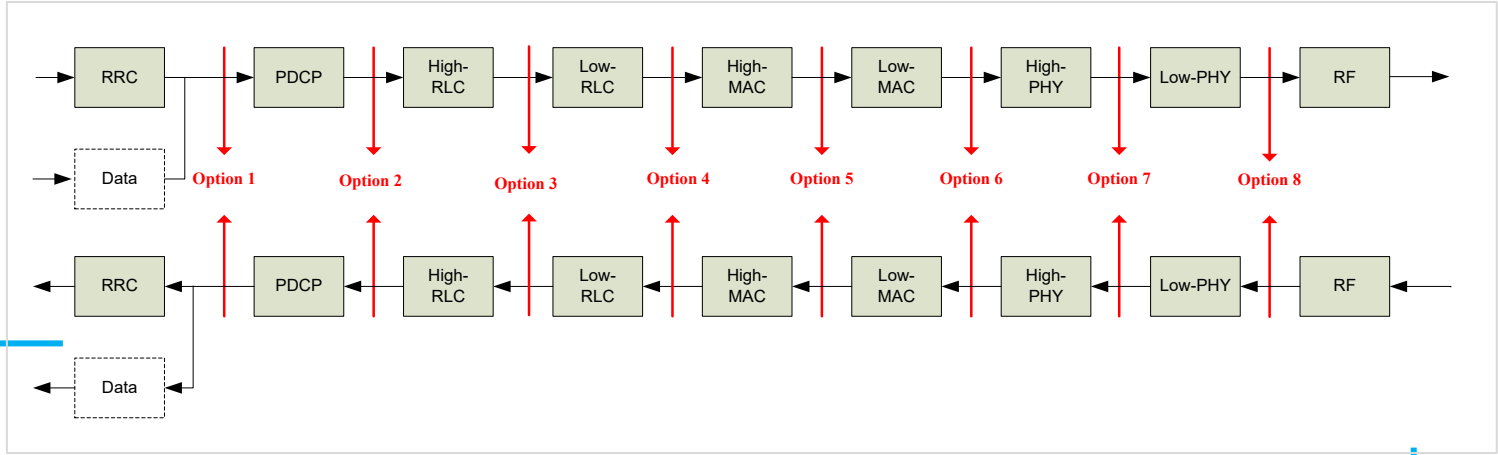

Option 8 (PHY-RF Split):

- **CU**: PHY, MAC, RLC, PDCP, RRC | **DU**: RF only
- **Key Aspect**: Separates RF from the PHY layer, transporting quantized I/O samples, this allows maximum centralization
- **Pros**: Enables very tight coordination (MIMO, Load balancing) across the whole stack, Isolates RF components allowing PHY updates without changing the radio unit and enables PHY resource pooling
- **Cons**: Demands extremely high bandwidth and low latency, constraining network topology
- **Transport Specs:** Latency – Ultra low (250us), Bandwidth – Extremely high (~157Gbps for high MIMO configurations)

PART 03

Functional Split 7.2x

What is 7-2x functional Split?

- This 7-2x functional split divides functions between **O-DU (upper PHY)** and **O-RU (lower PHY)**

Two important design goals:

1. Keep the O-RU simple
- Lower power consumption
- Smaller and cheaper units

2. Reduce fronthaul bandwidth
- High-level interface needs less data

Two O-RU types exist cause of performance, cost, complexity:

- **Category A** – No precoding in O-RU (simpler)
- **Category B** – Precoding supported in O-RU (more advanced) Allows support for modulation compression.

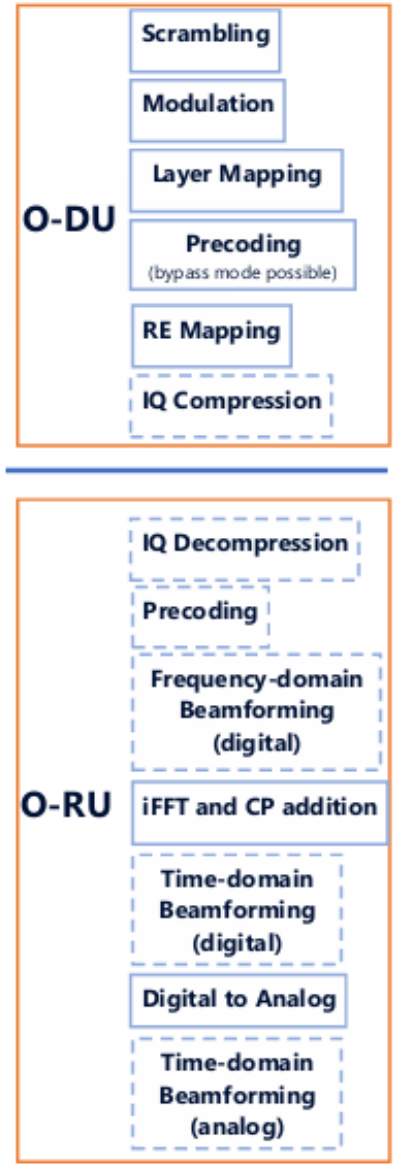

Figure 4: Split Point and Category A and Category B O-RAN Radio Units [3]

Split 7-2x (DL)

Downlink Split – LTE, Category A O-RUs

O-DU handles:
- Scrambling
- Modulation
- Layer mapping
- Precoding
- RE Mapping
- IQ compression

O-RU handles:
- IQ decompression
- iFFT
- CP addition
- Digital beamforming
- Analog beamforming
- RF output

LTE Category A O-RU DOES NOT do precoding → simpler radio unit

Downlink Split – LTE, Category B O-RUs

Now the O-RU ALSO does:
- Precoding
- Beamforming

Meaning:
- O-RU is more intelligent

Supports:

Spatial multiplexing
Transmit diversity
Large Delay CDD

O-DU still handles:
- Modulation
- Scrambling
- Initial RE mapping

RE mapping is split:
- ❑ Frequency mapping → O-DU
- ❑ Antenna mapping → O-RU

Smarter

Downlink Split – NR, Category A Radio

O-DU does:
- Signal generation
- Modulation
- Scrambling
- Layer mapping
- Precoding
- RE mapping
- IQ compression

O-RU does:
- IQ decompression
- Beamforming
- iFFT & CP
- Digital → Analog
- RF transmission

5G Category A keeps the radio unit simple → centralizes intelligence at O-DU

Downlink Split – NR, Category B Radio

O-RU includes:
- Precoding
- Beamforming
- MIMO processing

This allows:
- Massive MIMO
- Advanced spatial streams
- Better 5G performance

O-DU still handles:
- Modulation
- Scrambling
- High-level PHY

NR Category B = Best performance, but highest RU complexity

Split 7-2x (UL) –> LTE + NR

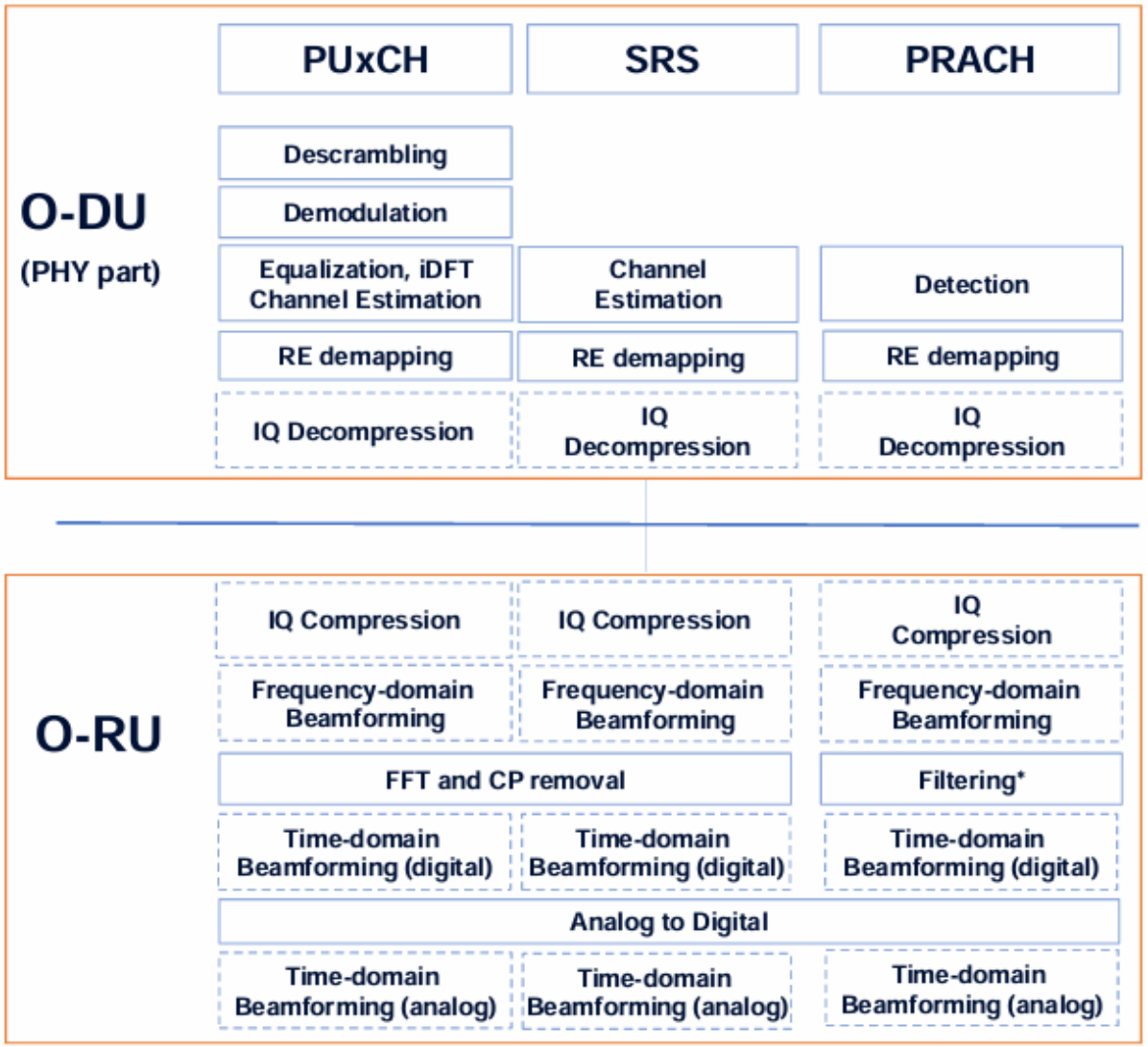

UL processing intelligence is centralized at O-DU

O-RU handles:
- Analog to Digital conversion
- FFT
- CP removal
- Beamforming
- IQ compression

O-DU handles:
- Channel estimation
- Equalization
- Demodulation
- Decoding
- Descrambling

Figure 5: illustrates some of the high-level functionalities inside the O-RU and O-DU, and do not bind the internal design of each of the O-RU and O-DU. [3]

Data Flow Between O-DU & O-RU (7-2x Split)

- In the 7-2x split, the **DU and RU talk using three types of data** over the fronthaul link:

User Plane

This is the **actual wireless signal** for users.

- **Downlink (DU → RU)**
  - DU sends IQ samples of user & control data
  - RU converts them to real radio signals and transmits via antenna
- **Uplink (RU → DU)**
  - RU receives signals from the UE
  - Converts them to IQ samples and sends to DU for decoding
- **PRACH (RU → DU)**
  - Sent when a new user tries to connect to the network

Control Plane

Instructions & Decisions
This is the **brain of the network**.

- **DU tells RU:**
  - Which user to serve
  - Which frequency & time slot to use
  - Which beam to transmit on (beamforming)
  - Whether data was received (ACK / NACK)

Control Plane = commands from the DU

Synchronization Plane

Exact Timing
Both devices must be **perfectly time-aligned**.

- **Uses:**
  - PTP (IEEE 1588)
  - SyncE
- **This keeps:**
  - Signals aligned
  - No interference
  - Smooth handover

Sync Plane = clock & timing control

In the 7-2x split, the O-DU sends instructions and signal data to the O-RU, while the O-RU handles real-time radio transmission, all synchronized by precise timing signals.

PART 04

O-RAN Fronthaul Explained

Introduction to Open Fronthaul

Goal: Define the interface, its purpose, and its primary components.

Definition: The Open Fronthaul Interface (also known as the LLS or Lower Layer Split interface) connects the O-DU (Distributed Unit) and the O-RU (Radio Unit).

Purpose: It standards communication between baseband (O-DU) and radio (O-RU) processing, enabling multi-vendor interoperability.

Key Planes:

- **CUS-Plane:** Manages real-time Control, User, and Synchronization data flows.
- **M-Plane:** Handles Management functions like configuration and firmware updates.

Protocol Basis: The interface relies heavily on Ethernet (Layer 2) and optionally IP/UDP (Layer 3) for transport.

Control & User Plane (C-Plane / U-Plane)

Goal: Detail the protocols used for data and control, and the impact of packet loss.

- **C-Plane (Control):** Transmits scheduling commands, beamforming weights, and configuration data to the O-RU.
  - **Protocol:** eCPRI or RoE (Radio over Ethernet) over Ethernet L2 (VLAN) or IP/UDP.
  - **Criticality:** Loss is severe; it can impact an entire slot or cause persistent beamforming errors.

- **U-Plane (User):** Transmits user digital data (I/Q samples) between O-DU and O-RU.
  - **Protocol:** Uses the same eCPRI/RoE stack as the C-Plane.
  - **Criticality:** Loss affects specific symbols but is generally less catastrophic than C-Plane loss.

Synchronization & Management Planes

Goal: Explain how the network stays in sync and how the Radio Unit (O-RU) is managed.

- **Synchronization Plane (S-Plane):**Role: Ensures strict time and frequency sync between O-DU and O-RU (critical for TDD/MIMO).
  - **Mechanisms:** Uses PTP (IEEE 1588) for precise time and SyncE for frequency.
  - **Topology:** PTP over Ethernet (Layer 2) is preferred for "Full Timing Support".
- **Management Plane (M-Plane):**Function: Handles FCAPS (Fault, Configuration, Security, etc.) for the O-RU.Hybrid Mode: Allows the SMO to manage the O-RU directly for maintenance tasks, while the O-DU handles real-time control.

Quality of Service (QoS) & Priorities

Goal: Explain how critical traffic is prioritized to prevent delays.

- **Why it Matters:** The link mixes Control, User, Sync, and Management data; delays can cause dropped calls.

Priority Levels (VLAN/DSCP):

  - **Highest Priority:** S-Plane (Sync) and C/U-Plane (Control/User Data). These are non-preemptable.
  - **Lower Priority:** M-Plane (Management) and background traffic.
- **Customization:** U-Plane priorities can be tuned (via ecpriRtcid) to favor critical services like URLLC (low latency) over standard data.

PART 05

O-RAN Interfaces

Management & Intelligence Interfaces

Focus: Interfaces connecting the SMO and RICs.

- **A1 Interface:** Connects Non-RT RIC to Near-RT RIC for policy guidance and ML model management.
- **O1 Interface:** Connects SMO to all O-RAN NFs for general management (FCAPS).
- **O2 Interface:** Connects SMO to O-Cloud for managing cloud infrastructure and deployments.
- **E2 Interface:** Connects Near-RT RIC to E2 Nodes (like O-CU, O-DU) for real-time control.
- **Y1 & R1 Interfaces:** Y1 exposes analytics to consumers; R1 connects rApps to the Non-RT RIC.

Internal RAN Interfaces (Functional Splits)

Focus: Interfaces inside the radio access network.

- **Open Fronthaul Interface:** Connects O-DU to O-RU.
  - **CUS-Plane:** Carries control, user data, and synchronization.
  - **M-Plane:** Manages the O-RU (can connect to SMO in hybrid mode).
- **F1 Interface:** Connects O-CU to O-DU. Split into F1-c (Control Plane) and F1-u (User Plane).
- **E1 Interface:** Connects O-CU-CP (Control Plane) to O-CU-UP (User Plane).
- **D2 Interface:** Connects two O-DU nodes for carrier aggregation.

External & Network Interfaces

Focus: Connections to the Core Network and other nodes.

- **NG Interface:** Connects O-RAN to the 5G Core.
  - **NG-c:** Control plane to AMF.
  - **NG-u:** User plane to UPF.
- **Xn Interface:** Connects gNB to gNB (or ng-eNB) for handover and coordination in 5G.
- **X2 Interface:** Legacy interface connecting eNBs (LTE) or used in Dual Connectivity.
- **Uu Interface:** The radio interface connecting the **User Equipment (UE)** to the base station.

PART 06

Security in O-RAN

Why Security in ORAN?

- Open interfaces → expanded attack surface
- Multi-vendor environment → trust challenges
- Near-RT RIC controls critical RAN functions
- xApps can come from third-party developers
- Data, ML models, and control loops become high-value targets

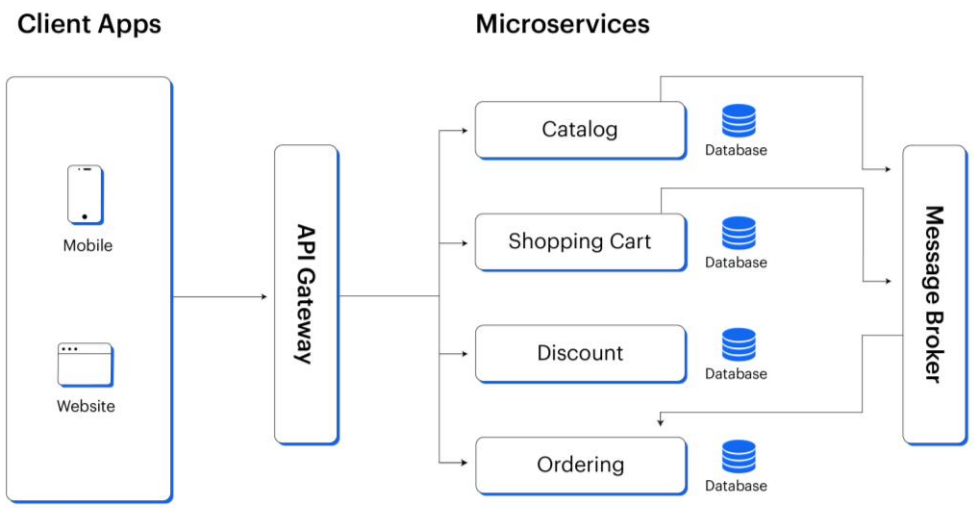

Figure 6: Microservices architecture diagram

Figure 7: Multi-Vendor Marketplace Structure

Threat Focus: Near-RT RIC

- RIC is identified as a **high-risk point** because it:
  - Has direct control over E2 Nodes
  - Hosts microservice-based xApps
  - Exposes APIs (A1, E2, Y1, O1)
  - Handles UE-level & cell-level sensitive data

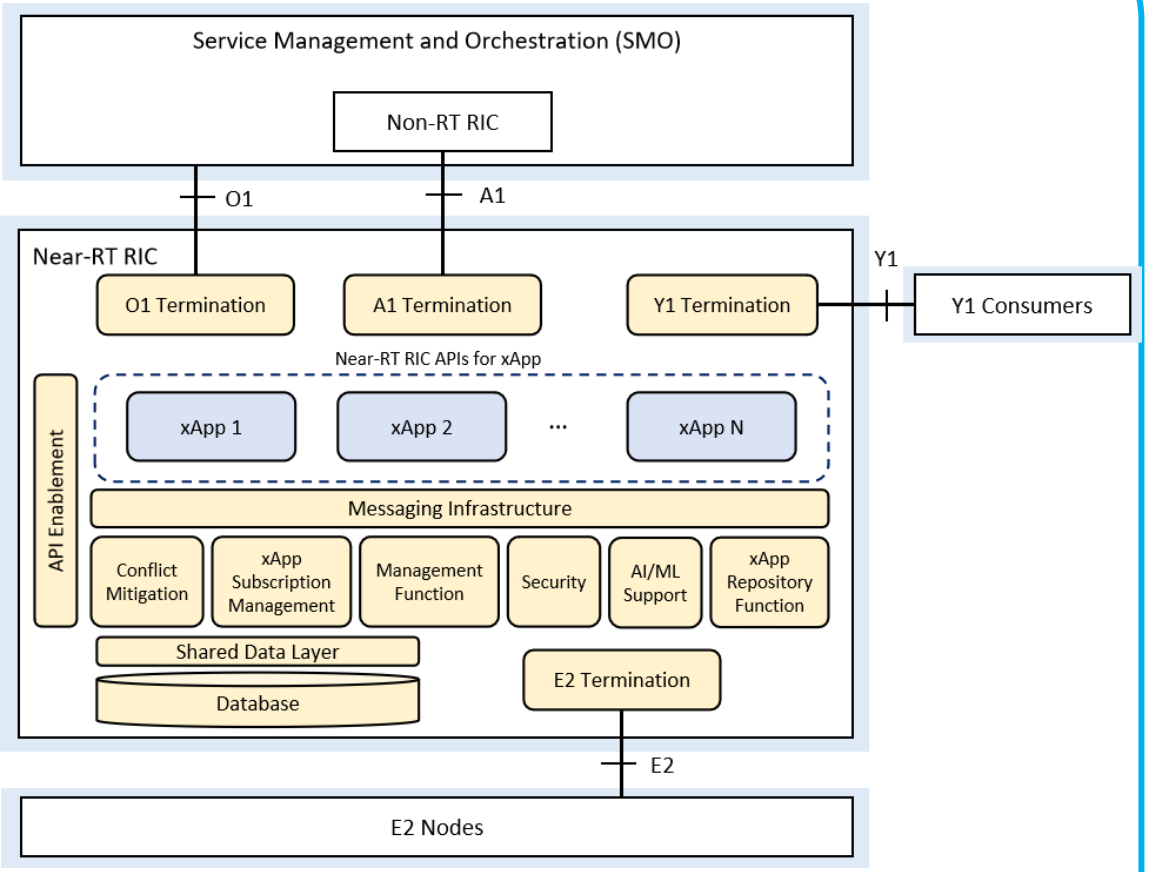

Figure 8: Near-RT RIC Internal Architecture

Key Issues (Overview)

The major security issues can be mainly grouped as:

1. Malicious or compromised xApps
2. Conflicting/xApp behavior risks
3. ML/AI vulnerabilities
4. API & interface security gaps
5. Data protection challenges
6. Untrusted onboarding & identity problems

Issue 1: Malicious xApps

- **Threats:**
  - Abnormal E2 control actions
  - Exporting RAN data
  - E2SM misuse
  - Overloading the platform
- **Needed Controls:**
  - Trust scoring
  - Code signing
  - API access restrictions

Issue 2: Compromised xApps

- **Causes:**
  - Open-source vulnerabilities
  - Unsafe libraries
  - Supply-chain attacks
- **Mitigation:**
  - Secure coding standards
  - Continuous vulnerability scanning
  - Patch management

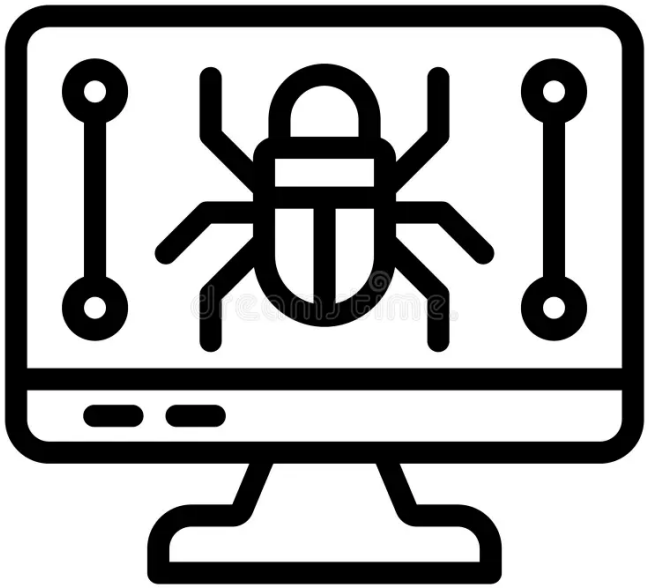

Issue 3: Conflicting xApps

- **Threat:**

  Two xApps give contradictory control instructions.

- **Example:**

  One xApp increases power; another decreases → oscillation → service degradation.

- **Solution:**
  - RIC-level conflict mediation
  - Priority rules & arbitration

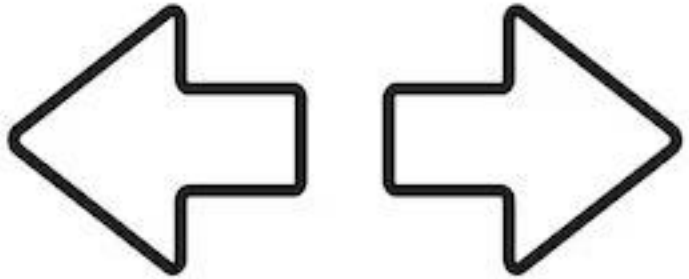

Issue 4: ML Pipeline Attacks

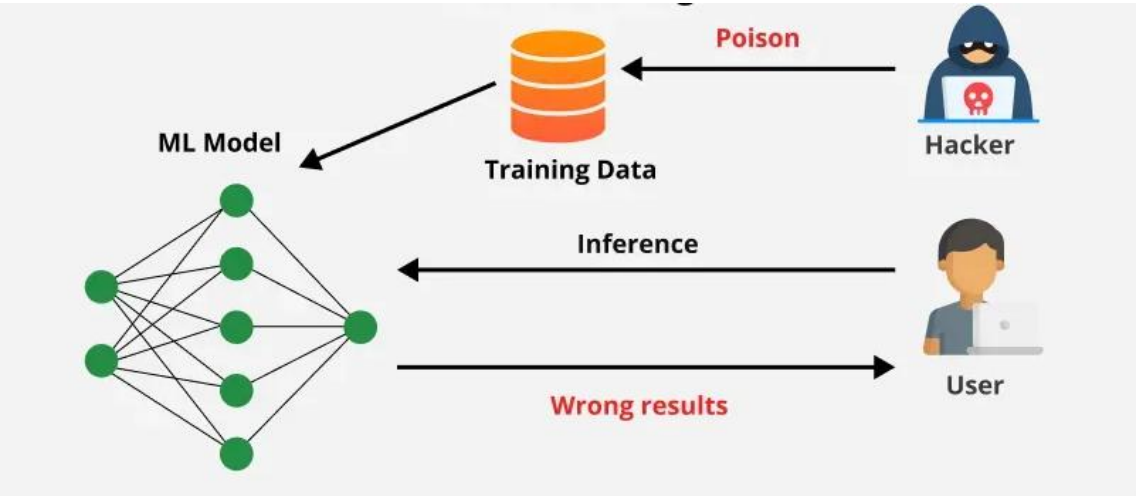

Figure 9: Data Poisoning

- **Data Pipeline Risks:**
  - Poisoned training data
  - Corrupted telemetry
- **Model Risks:**
  - Unauthorized model updates
  - Model integrity tampering
- **Mitigation:**
  - Model signing
  - Secure data ingestion
  - Verification before deployment

Issue 5: Data Protection (NIB/SDL)

- **Risks**:
  - UE information leakage
  - Unauthorized NIB access
- **Needed:**
  - Tokenized DB access
  - Fine-grained authorization
  - SDL client registration controls

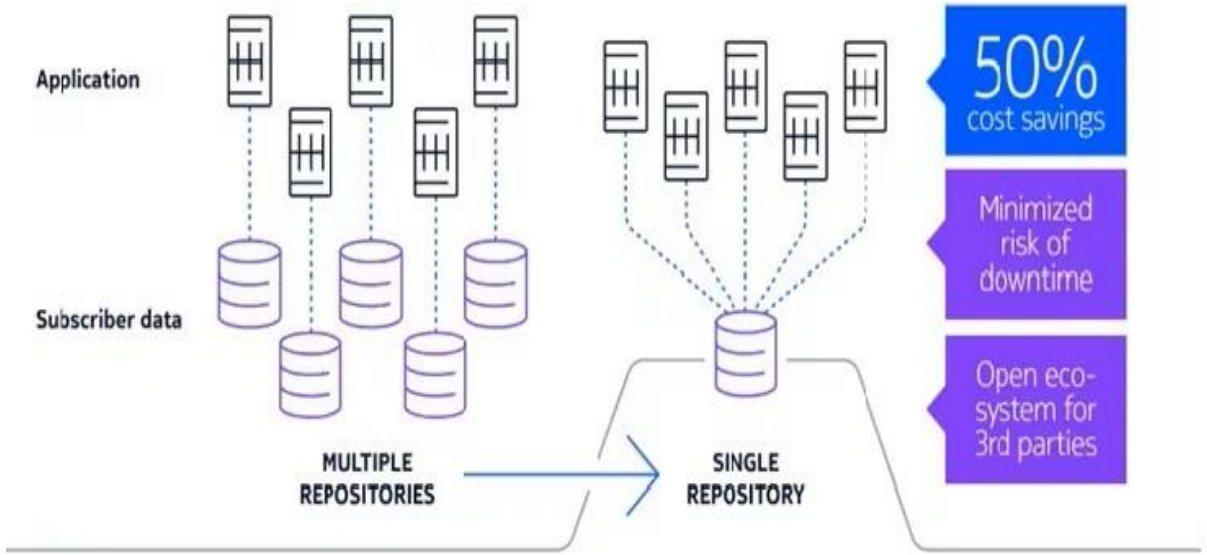

Figure 10: Shared Data Layer

Issue 6: API Security Issues

- **APIs exposed to:**
  - xApps
  - E2 nodes
  - SMO
  - Y1 consumers
- **Weaknesses include:**
  - Missing authentication
  - Incorrect authorization
  - Replay attacks
  - Unsecured REST endpoints
- **Mitigation:**
  - OAuth 2.0
  - JWT
  - mTLS
  - Network-layer security (IPSec/TLS)

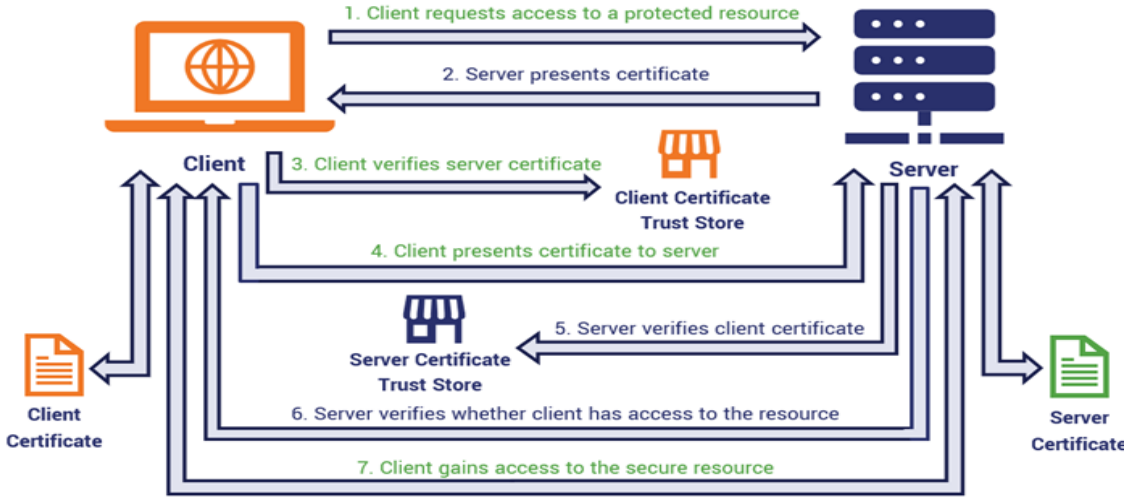

Figure 11: How Mutual Authentication Works

OAuth 2.0

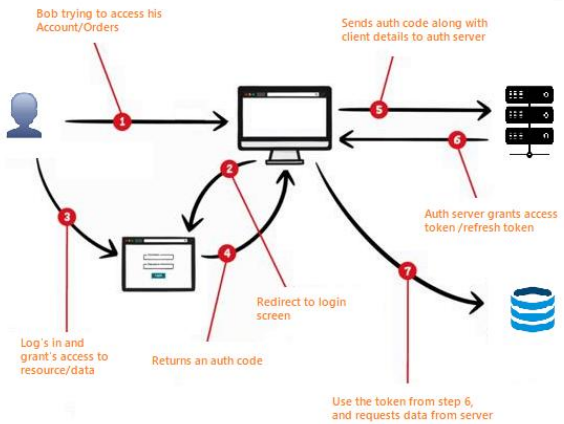

Issue 7: Untrusted Onboarding (Third-Party xApps)

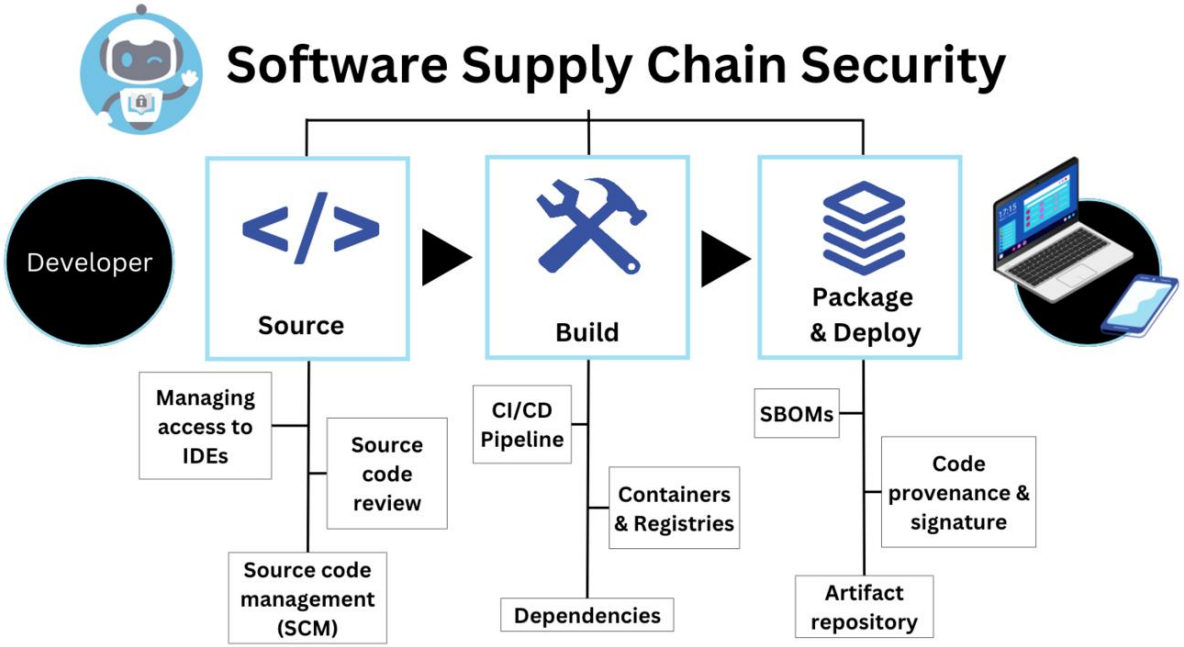

Figure 12: Software Supply Chain

- **Risk:**
  Service Provider may onboard apps from unknown vendors

- **Solution:**
  - Strong onboarding workflow
  - Identity validation
  - SPIFFE/SPIRE-based workload identity
  - Registration procedures

Interface Security Risks

A1 – malicious policy injection

E2 – fake E2 node impersonation

O1 – management plane attacks

Y1 – analytics leakage

Mitigations:

- Policy authentication
- Secure E2 handshake
- Enhanced O1 security
- Y1 consumer access control

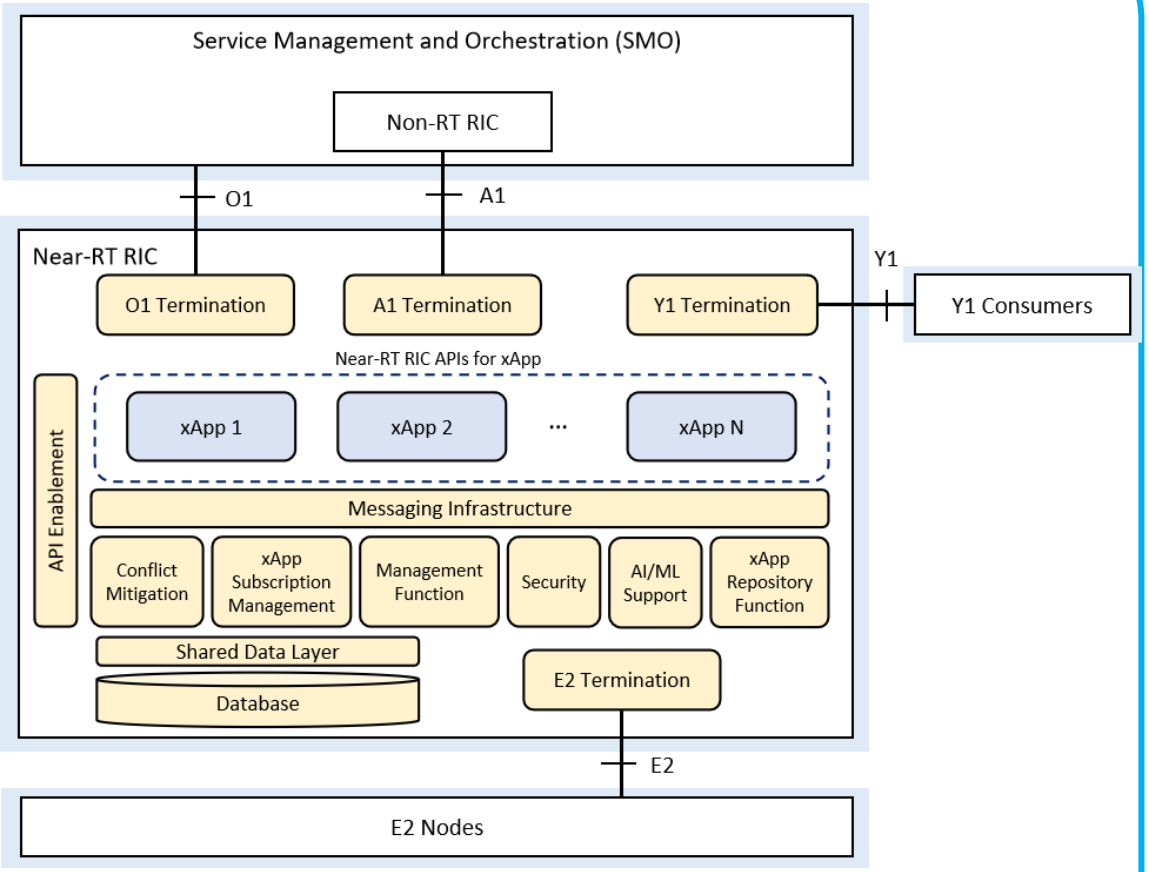

Figure 8: Near-RT RIC Internal Architecture

Summary of Solutions

WG11 provides 17 solution frameworks, including:

- Secure onboarding mechanisms
- API authentication & authorization frameworks
- Log and audit requirements (FCAPS)
- Secure E2/A1/O1/Y1 mechanisms
- Identity management (SPIFFE/SPIRE)

Key Takeaways

- RIC/xApp security is essential to protect RAN stability
- Open interfaces require strong layered security
- ML and data pipelines are new attack vectors
- Identity, onboarding, and API security are the backbone of RIC protection
- WG11 provides the blueprint for future ORAN security specifications

References

1. O-RAN.WG1.TS.OAD-R004-v15.00 (O-RAN Work Group 1 (Use Cases and Overall Architecture) O-RAN Architecture Description)

2. 3GPP TR 38.801 V14.0.0 (2017-03) (3rd Generation Partnership Project; Technical Specification Group Radio Access Network; Study on new radio access technology: Radio access architecture and interfaces (Release 14))

3. O-RAN.WG4.TS.CUS.0-R004-v19.00 (O-RAN Working Group 4 (Open Fronthaul Interfaces WG) Control, User and Synchronization Plane Specification)

THANK YOU!

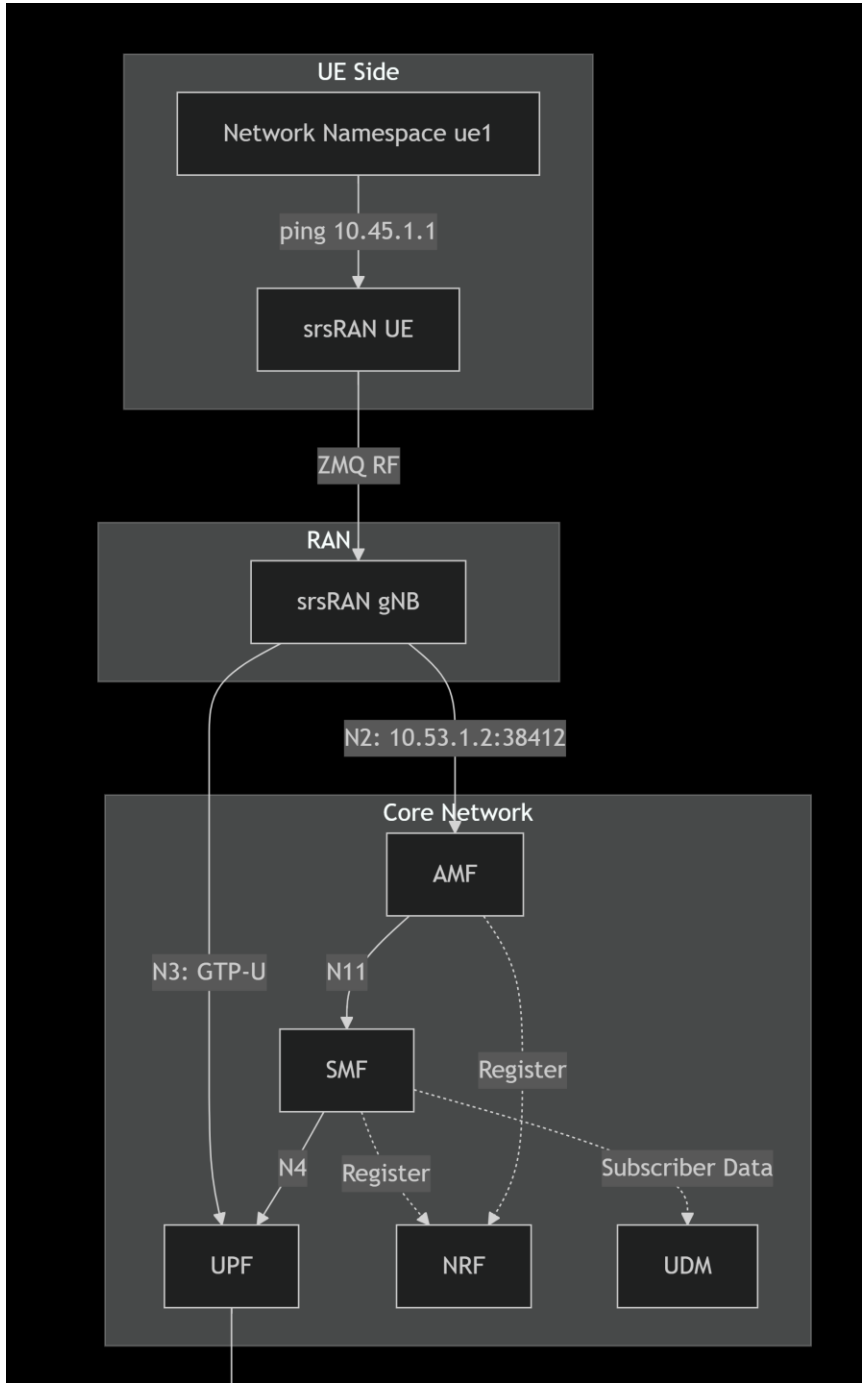
UE Side
Network Namespace ue1
ping 10.45.1.1
srsRAN UE
ZMQ RF
RAN
srsRAN gNB
N2: 10.53.1.2:38412
Core Network
AMF
N3: GTP-U
N11
SMF
Register
N4
Register
Subscriber Data
UPF
NRF
UDM

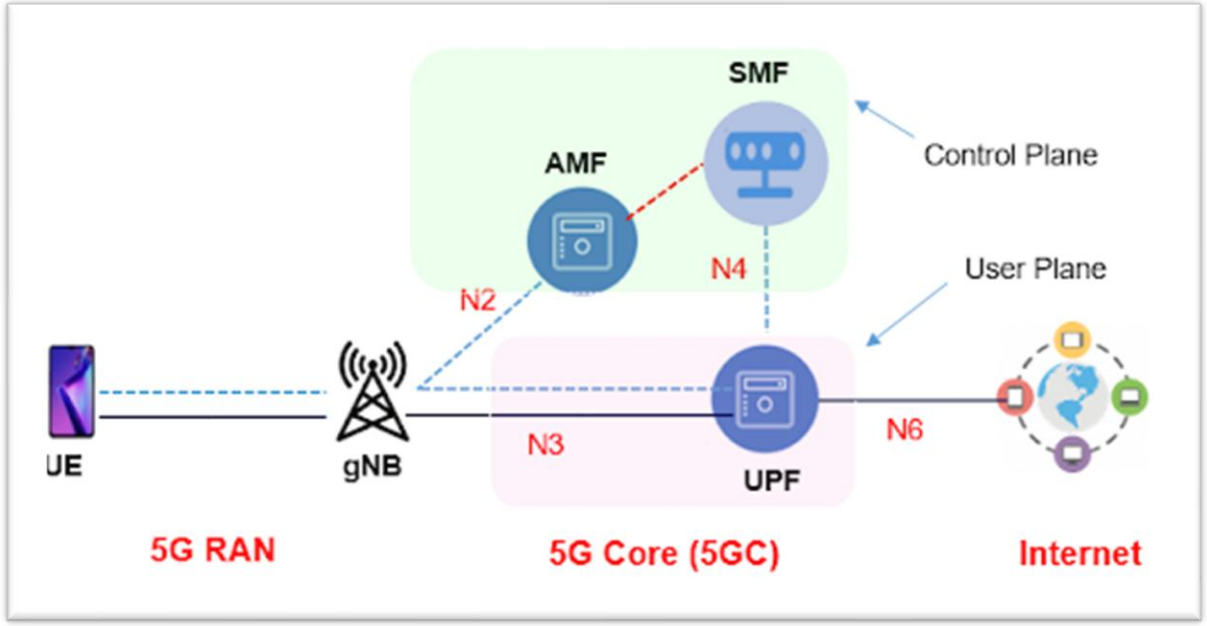
SMF
AMF
Control Plane
N4
User Plane
N2
UE
gNB
N3
UPF
N6
5G RAN
5G Core (5GC)
Internet