Security and Trust in Open RAN

Supervisor: Dr. Chatura Seneviratne
Co-Supervisor 1: Prof. Dr. An Braeken
Co-Supervisor 2: Mr. Pramitha Fernando

EG/2021/4474 Dewmith M.K.J.
EG/2021/4485 Dilshan M.D.K.
EG/2021/4807 Sewinda L.L.D.
EG/2021/4832 Thilohith T.K.

02/01/2026

CONTENT

01 | The O-RAN Security Context

02 | Threat Landscape & Architecture

03 | xApp Security & Attack Scenarios

04 | Mitigation & Security

PART 01

The O-RAN Security Context

The Trust Gap in Multi-Vendor Disaggregation

- **The Paradigm Shift:** Traditional RAN is a “Black Box” where trust is implicit because a single vendor controls the entire vertical stack.
- **The Problem:** O-RAN disaggregates these functions into the O-RU, O-DU and O-CU. While this promotes innovation, it creates new trust boundaries.
- **Thesis Finding:**
  - Pekka Kuure highlights that current O-RAN specifications lack a native mechanism to verify the integrity of distributed functions provided by different parties.
  - We are moving from a single point of trust to a fragmented ecosystem where “Openness” equals “Exposure”.

Near-RT RIC – Intelligence on a Shared Foundation

- **The Platform:** The Near-RT RIC is a cloud native platform, typically running on Kubernetes, which introduces IT-grade vulnerabilities into the Telco space.
- **The Risk:** It hosts xApps – independent microservices that execute critical radio resource management.
- **The Vulnerability:**
  - Because these xApps share the same Linux kernel and messaging router (RMR), a single compromised xApp can potentially bypass software isolation to influence the entire RAN control loop.

Maintaining the CIA Triad

- **Confidentiality:** Protecting sensitive User Equipment (UE) data and network telemetry from ‘leaking’ between xApp containers.
- **Integrity:** The thesis identifies Message Injection as a primary threat – if a compromised xApp sends a tampered control command, the base station (gNB) has no native way to know it is malicious.
- **Availability:** Protecting the Near-RT RIC from Resource Exhaustion. A malicious xApp can flood the messaging bus or hog CPU cycles, causing a total loss of network service for a geographic area.

Zero Trust Environment

- **The Shift:** We must move from perimeter defense to a Zero Trust Architecture (ZTA) where no xApp is trusted based on its location in the RIC.
- **The Solution:** The thesis proposes Remote Attestation to verify an xApp's code before it runs.
- **Our Project Niche:** However, attestation only proves the code is "what was signed." It does not stop a "valid" xApp that turns bad at runtime. This justifies our focus on Active Containment Strategies – providing the reactive "Kill Switch" that the thesis framework requires.

PART 02

Threat Landscape & Architecture

Architectural Shift:

O-RU (Radio Unit): cell sites
O-DU (Distributed Unit): cell sites data centers
O-CU (Centralized Unit): edge cloud data centers or public cloud

The Trust Matrix (Container - Apps vs. Server –OS/Hardware)

Four Field Matrix: Analysis shows four combinations of trust where the only secure state is when *both* Server and Container are trusted

For Threats and Attack Vectors: MITRE Corporation provide **MITRE ATT&CK** framework is a knowledge base of different adversary tactics.

Server Attacks – Server-side request forgery (SSRF) – exploit services
Container Attacks – malware – privilege escalation → Root rights

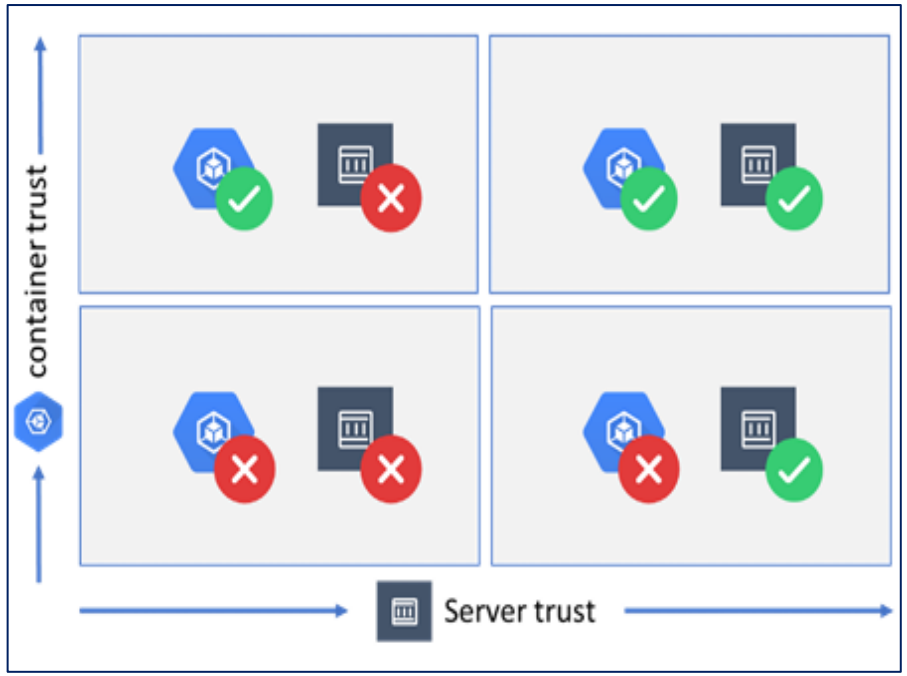

Figure 01: Trust Combinations for the container and the server [1]

Threat Landscape – Vulnerabilities in the Stack

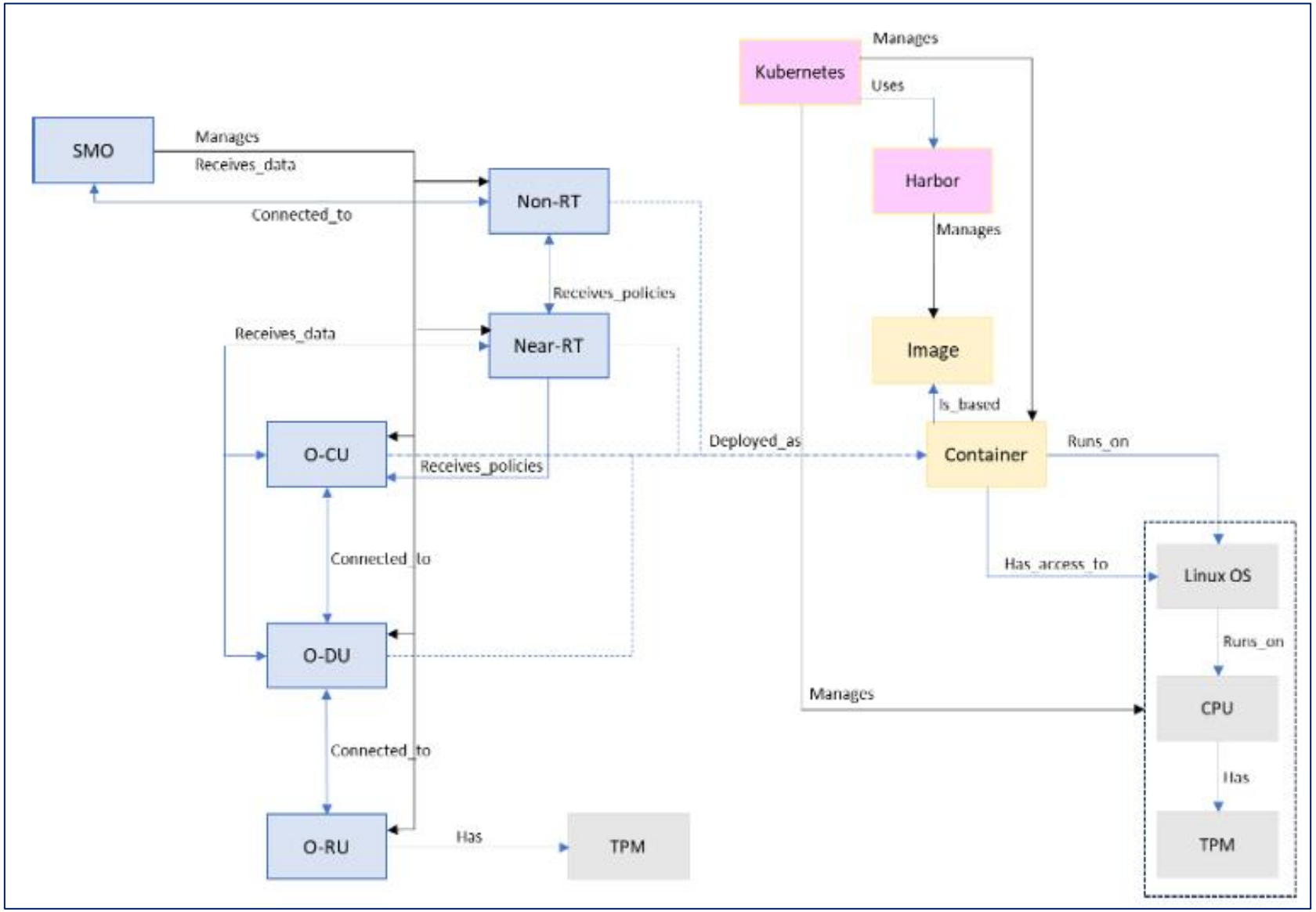

Figure 02: Cloud-native ORAN on bare metal server [1]

Threat Landscape – Vulnerabilities in the Stack

Management Plane Threats (SMO)

SMO layer is the key protect. A compromised SMO account **grants administration rights** (Ex: FCAPS) over the entire network. Attacks here can severely impact confidentiality, integrity, and availability.

RIC & Application Threats

The Non-RT and Near-RT RICs host 3rd party applications (rApps/xApps) which introduce risks like data leakage, theft of services, and potential tracking of user devices. Malicious actors could use these platforms to **degrade system performance or abuse radio network information**. ***(Dos, tracking, data corruption and modify, leakages, MIMA)***

Infrastructure & Kubernetes Risks

Compromised Host: Attackers can gain a foothold via phishing. Exploit Services –ex: Ukraine attack (excel)

Kubernetes Vulnerabilities: As the "Linux kernel of distributed systems," Kubernetes has high-severity vulnerabilities (e.g., CVE-2024-29990) allowing **privilege escalation** and resource theft.

Registry Risks (image): Vulnerabilities in container registries (e.g., Harbor) can allow attackers to access or **replace images without authentication**.

Enabling Trust in Open RAN via Remote Attestation

1. The Challenge is Securing

Cloud-native Open RAN involves diverse stakeholders and a mix of IT/Telecom technologies, increasing the attack surface .Trust cannot be assumed; it must be **continuously monitored and verified** to protect the CIA of the system .

2. The Solution: Remote Attestation along with Root of Trust

Foundation: Trust is built on a hardware **Root of Trust (RoT)** (e.g., TPM) and verifiable evidence.
Mechanism :

Measure: A Trust Agent captures the state of the host/software during boot and stores it in the TPM .
Verify: A central Verification Service compares this evidence against **"Known Good Values"** to confirm integrity.

3. Implementation Architecture

RA SMO (Telco Domain): Co-located with **SMO** to attest Network Functions (O-CU, O-DU, O-RU) based on system configuration knowledge .
RA Cloud (Infrastructure Domain): Co-located with **Kubernetes** to verify compute resources and container images .

PART 03

xApp Security & Attack Scenarios

What is an xApp?

- An xApp is a third-party microservice deployed on the Near-RT RIC
- Designed to perform near real-time radio optimization (10 ms – 1 s)
- Developed by external vendors or open-source communities, not always the operator
- Communicates using:
  - E2 interface :- sends control commands to O-DU / O-CU
  - SDL (Shared Data Layer) :- reads/writes network and UE-related data
- While xApps improve **intelligence and flexibility**, they **increase the attack surface of the RAN**

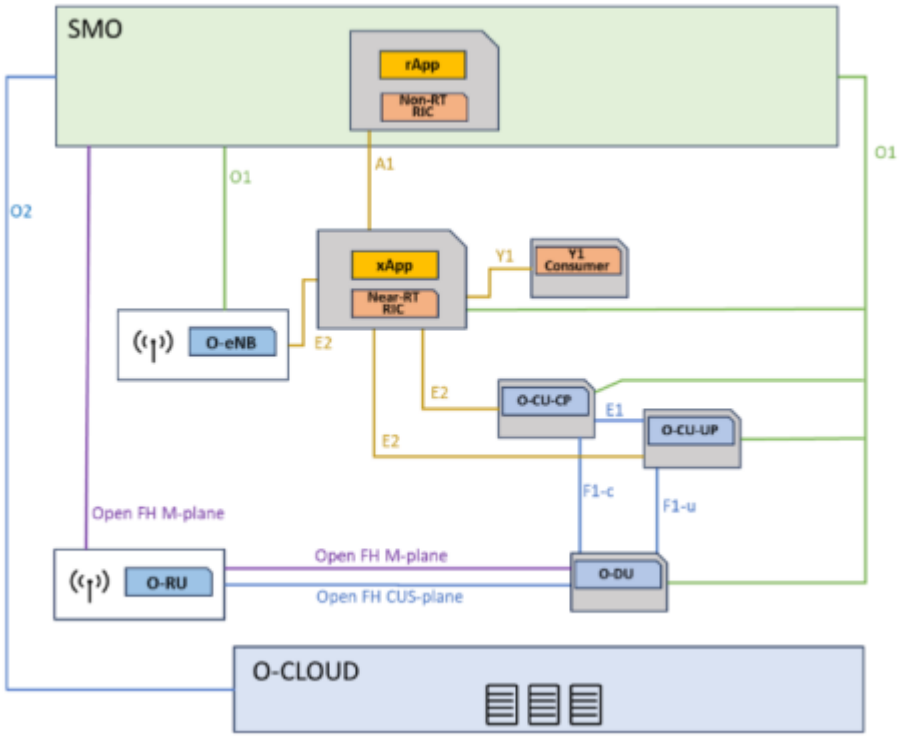

Figure 3: O-RAN logical architecture

xApp as an Attack Vector

- xApps run as **containers on shared cloud infrastructure**

- They share:
  - Same Linux kernel
  - Messaging router (RMR)
  - Kubernetes resources

- If an xApp is compromised:
  - Isolation can be bypassed
  - Other xApps and the RIC itself may be affected

- This creates a **supply chain risk**, especially when:
  - CI/CD pipelines are compromised
  - Vulnerable third-party libraries are used

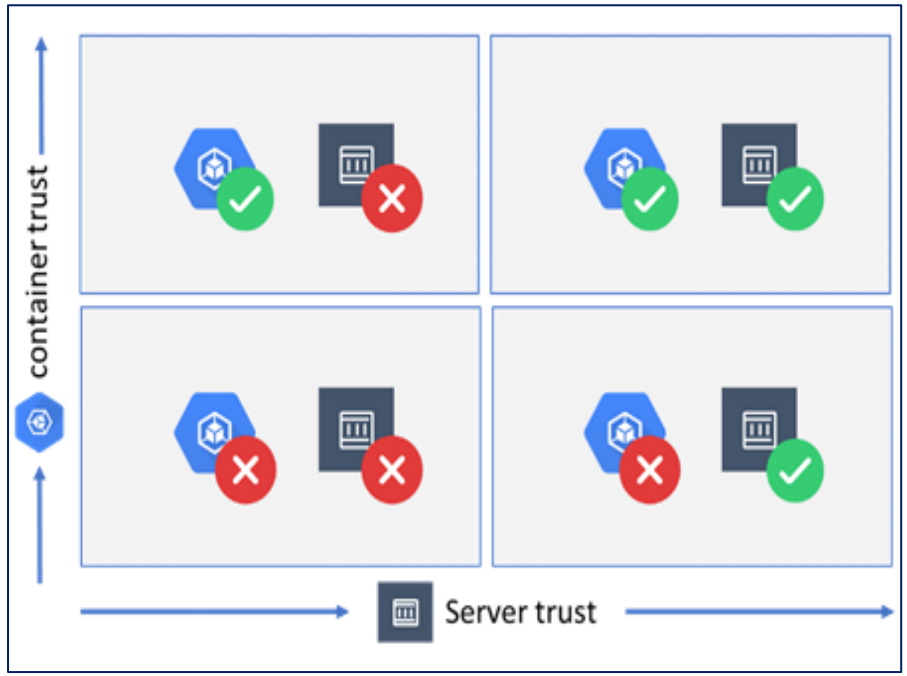

Figure 01: Trust Combinations for the container and the server

Resource Exhaustion (DoS)

- A malicious or faulty xApp may use excessive CPU or memory
- Because resources are shared, other xApps cannot operate properly
- This leads to Near-RT RIC instability or failure
- Results in a Denial-of-Service (DoS) attack
- Impacts Availability of the network

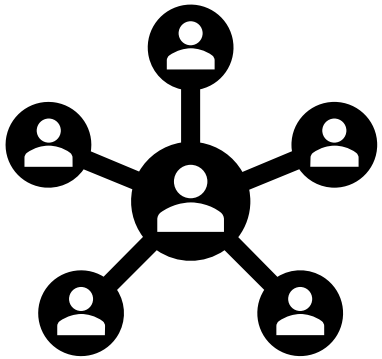

Data Injection via E2 Interface

- A compromised xApp can send malicious or incorrect control messages
- Messages are delivered through the E2 interface
- Radio nodes may execute these commands without validation
- This can disrupt scheduling, power control, or handovers
- Impacts Integrity of radio control operations

Unauthorized Data Access

- xApps access data through the **Shared Data Layer (SDL)**
- Weak access control may allow an xApp to read **unauthorized UE data**
- Exposed data may include user identifiers and mobility patterns
- Leads to **privacy violations and data leakage**
- Impacts **Confidentiality**

Key Takeaway

- xApps directly influence radio behavior
- One compromised xApp can impact many users
- Threatens **Availability, Integrity & Confidentiality**
- Strong xApp security is essential

PART 04

Mitigation & Security Recommendations

Defensive Strategy: Isolation & Sandboxing

- Use Kubernetes Namespaces: Partition the cluster into logical sub-sections so xApps remain isolated from one another.
- Apply Resource Quotas: Limit the CPU and memory each xApp can use (leveraging Linux "cgroups").
- Why it works: This prevents a single malicious or "runaway" application from crashing the entire host or stealing resources from other critical functions.

Strict Authentication & Authorization

- Zero Trust Architecture: Move away from assuming everything inside the network is safe; instead, verify every connection.
- OAuth2 & Certificate Checks: Use strict, token-based or certificate-based authentication for all microservices.
- Verify Access: Ensure only authorized xApps can communicate with the RIC Message Router (RMR) or access the Shared Data Layer (SDL).

Conflict Mitigation Logic

- The Conflict Problem: In a multi-vendor environment, two different xApps might send contradictory commands to the same gNB (base station).
- Logic Layer Solution: Implement a coordination layer within the Near-RT RIC to filter and prioritize commands.
- Policy Steering: Use policies from the Non-RT RIC to provide a "single source of truth" for xApp behavior.+1

Conclusion: A Resilient Future for O-RAN

- Modern Challenges, Modern Tools: While the expanded attack surface introduces new risks, cloud-native tools provide the agility to fight back.
- Automated Security: Features like automated patching and continuous monitoring via Remote Attestation allow for rapid threat response.
- Summary: By anchoring trust in hardware (TPM), we can manage the complexity of Open RAN while maintaining a robust security posture.+2

References

1. Pekka Kuure, Security and trust in Open RAN

THANK YOU!