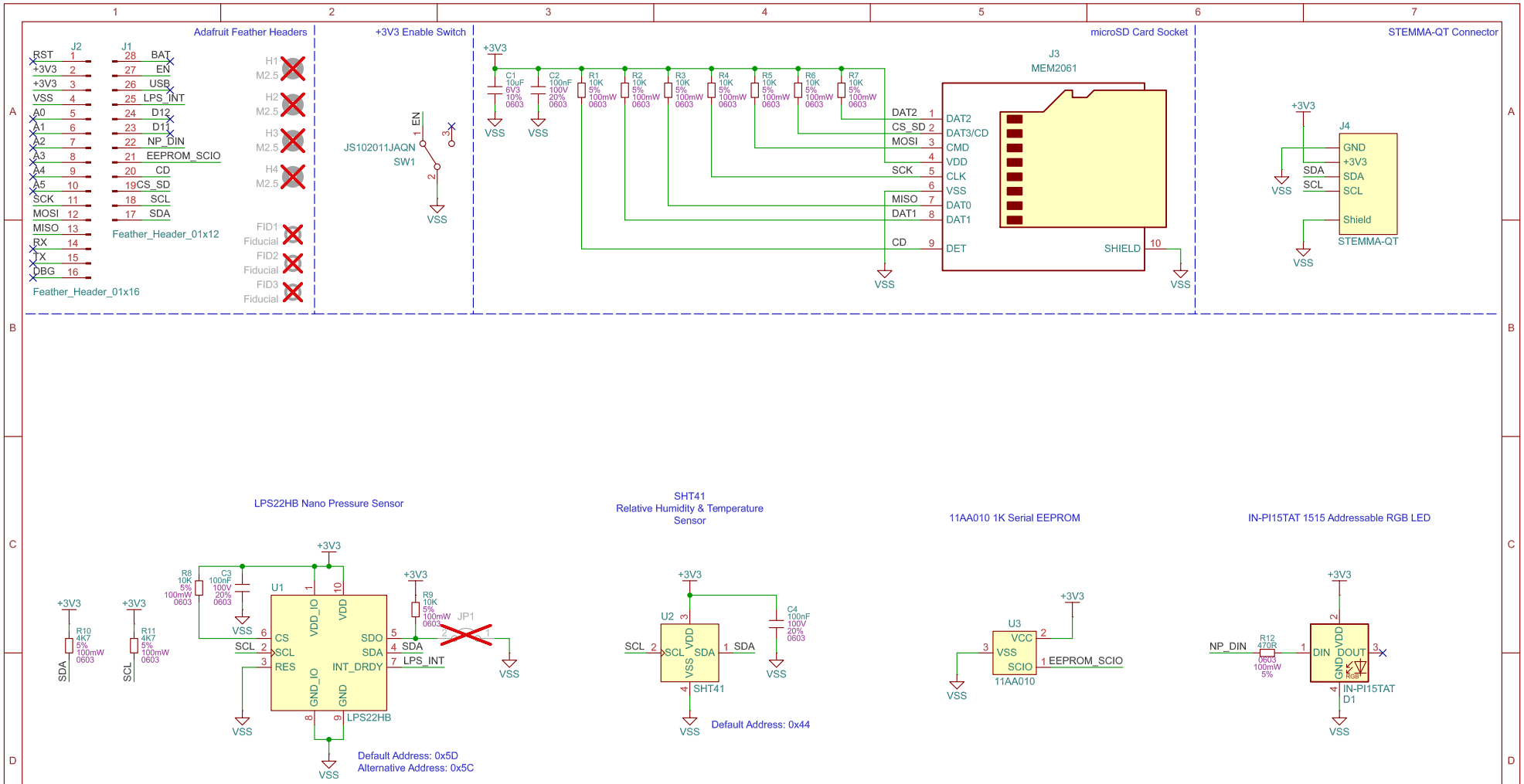

Licensed under CERN OHLv2 - Permissive
© Destination SPACE Inc. 2024
Status FINAL
Drawn By: Madison Gleydura
Destination SPACE Inc.

Sheet: /
File: weather-featherwing.kicad_sch

Title: Weather Featherwing

Size: USLetter	Date: 2025-03-29	Rev: 1.3.0
KiCad E.D.A. 9.0.0		Id: 1/1