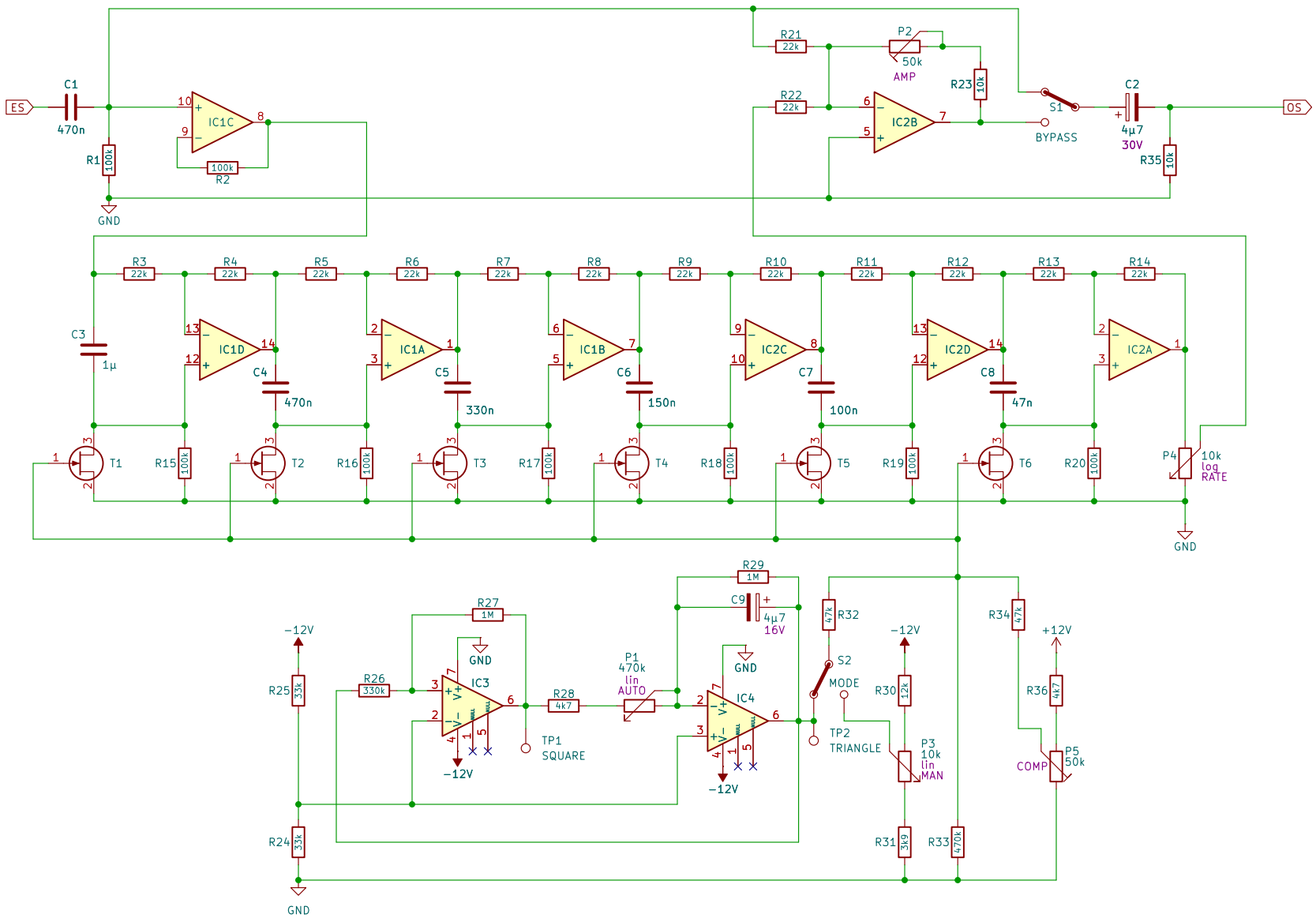

FORMANT-KO

THE HOUSE OF GALAHAD

Sheet: /PHASE_SHIFTER/

File: PHASE_SHIFTER.kicad_sch

Title: PHASE-SHIFTER

Size: USLetter	Date: 2026-06-22	**Rev: A**
KiCad E.D.A. 10.0.3		Id: 1/2

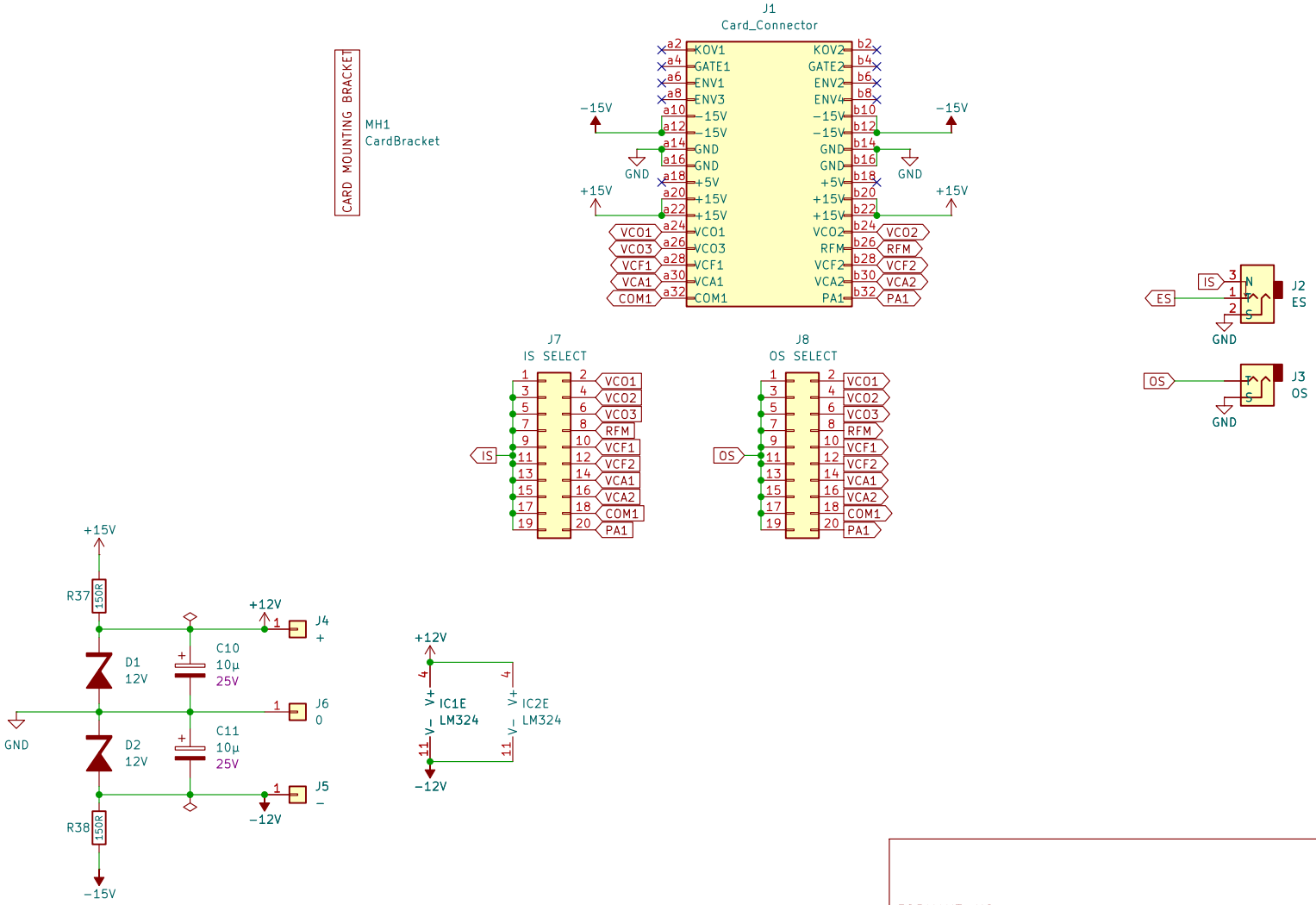

FORMANT-KO

THE HOUSE OF GALAHAD

Sheet: /SYSTEM/

File: system.kicad_sch

Title: PHASE-SHIFTER

Size: USLetter	Date: 2026-06-22	**Rev: A**
KiCad E.D.A. 10.0.3		Id: 2/2