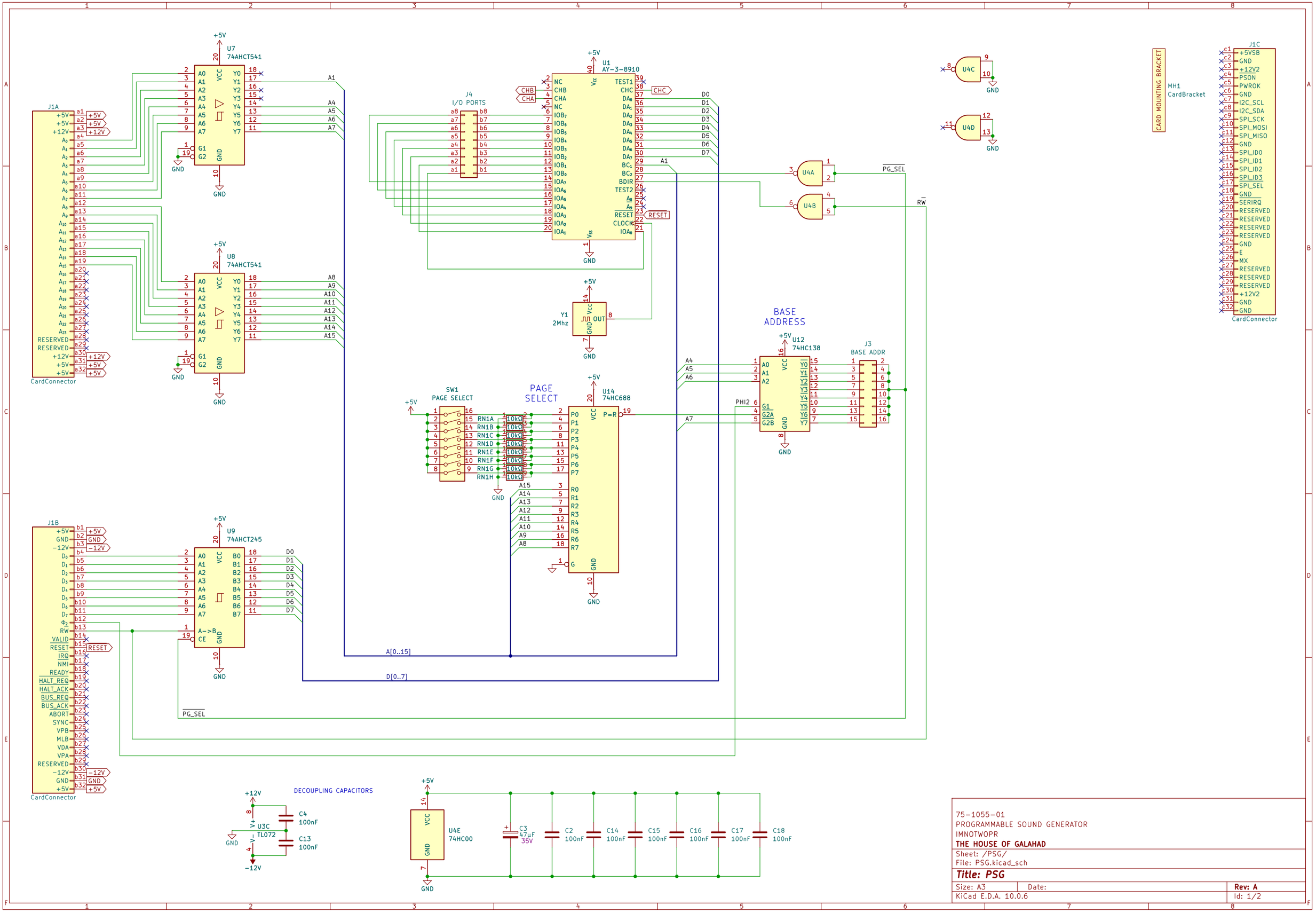


75-1055-01
PROGRAMMABLE SOUND GENERATOR
IMNOTWOPR
**THE HOUSE OF GALAHAD**

Sheet: /PSG/
File: PSG.kicad_sch

**Title: PSG**

| Size: A3 | Date: | Rev: A |
|---|---|---|
| KiCad E.D.A. 10.0.6 | | Id: 1/2 |

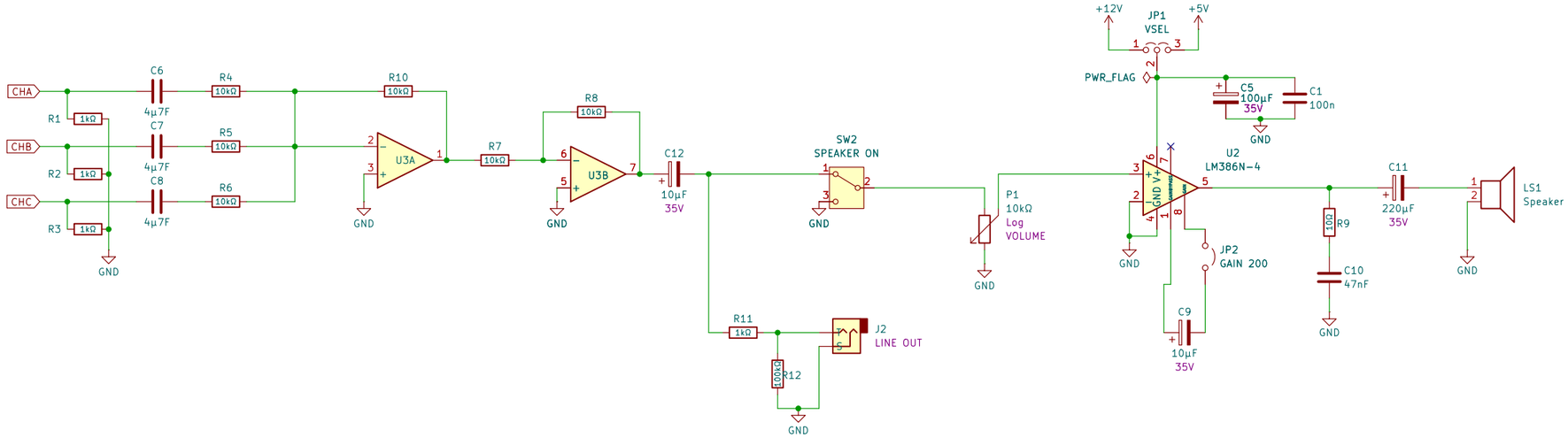


75-1055-01
PROGRAMMABLE SOUND GENERATOR
IMNOTWOPR
**THE HOUSE OF GALAHAD**

Sheet: /MIXER/
File: mixer.kicad_sch

***Title: PSG***

| Size: A3 | Date: | **Rev: A** |
|---|---|---|
| KiCad E.D.A. 10.0.6 | | Id: 2/2 |