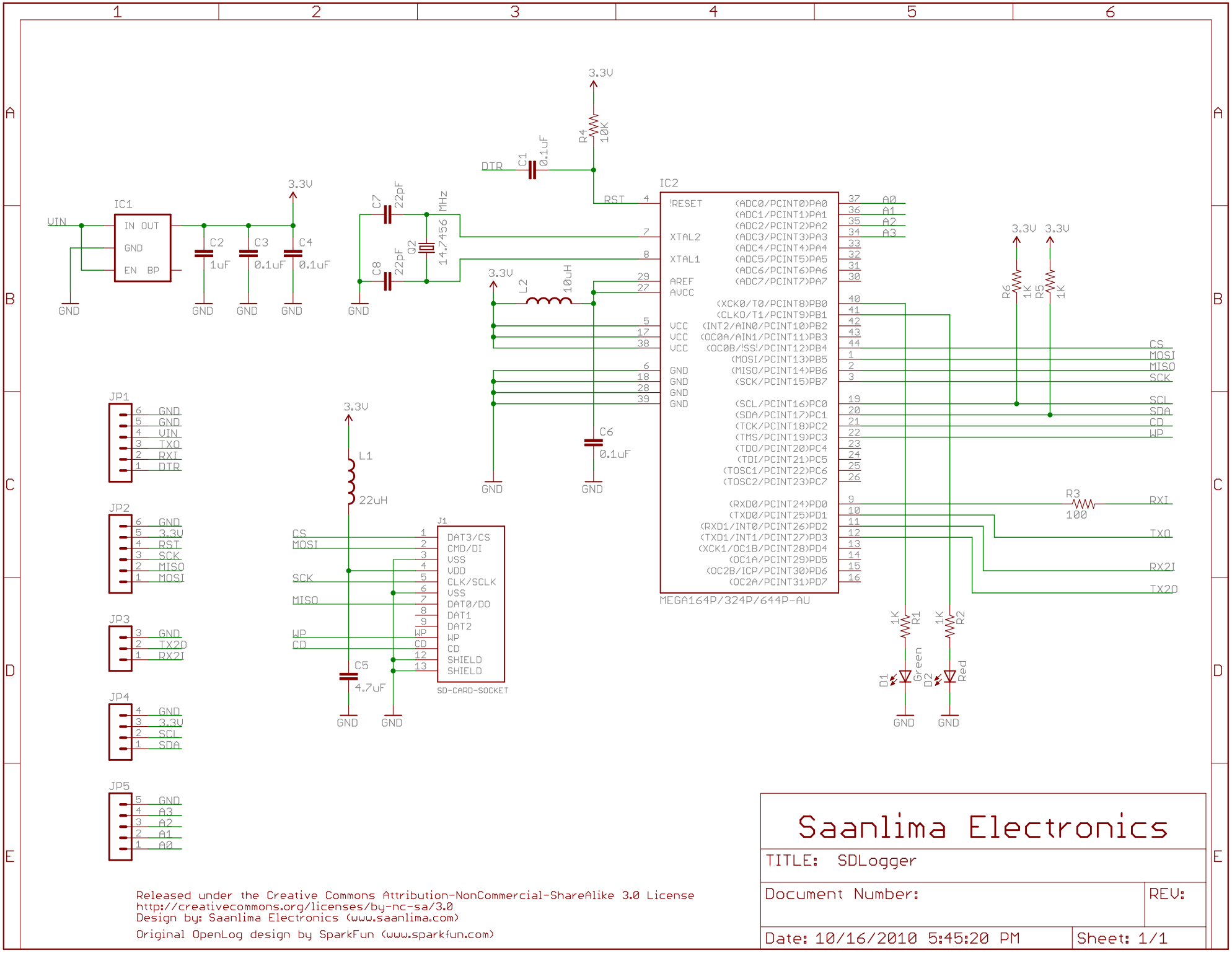
IC1
IN OUT
GND
EN BP
VIN
C2 1uF
C3 0.1uF
C4 0.1uF
3.3V
GND
C7 22pF
C8 22pF
Q2 14.7456 MHz
DTR
C1 0.1uF
R4 10K
RST
IC2
!RESET
XTAL2
XTAL1
AREF
AVCC
VCC
GND
(ADC0/PCINT0)PA0
(ADC1/PCINT1)PA1
(ADC2/PCINT2)PA2
(ADC3/PCINT3)PA3
(ADC4/PCINT4)PA4
(ADC5/PCINT5)PA5
(ADC6/PCINT6)PA6
(ADC7/PCINT7)PA7
(XCK0/T0/PCINT8)PB0
(CLKO/T1/PCINT9)PB1
(INT2/AIN0/PCINT10)PB2
(OC0A/AIN1/PCINT11)PB3
(OC0B/!SS!/PCINT12)PB4
(MOSI/PCINT13)PB5
(MISO/PCINT14)PB6
(SCK/PCINT15)PB7
(SCL/PCINT16)PC0
(SDA/PCINT17)PC1
(TCK/PCINT18)PC2
(TMS/PCINT19)PC3
(TDO/PCINT20)PC4
(TDI/PCINT21)PC5
(TOSC1/PCINT22)PC6
(TOSC2/PCINT23)PC7
(RXD0/PCINT24)PD0
(TXD0/PCINT25)PD1
(RXD1/INT0/PCINT26)PD2
(TXD1/INT1/PCINT27)PD3
(XCK1/OC1B/PCINT28)PD4
(OC1A/PCINT29)PD5
(OC2B/ICP/PCINT30)PD6
(OC2A/PCINT31)PD7
MEGA164P/324P/644P-AU
A0
A1
A2
A3
CS
MOSI
MISO
SCK
SCL
SDA
CD
WP
RXI
TXO
RX2I
TX2O
L2 10uH
C6 0.1uF
R6 1K
R5 1K
R3 100
R1 1K
R2 1K
D1 Green
D2 Red
L1 22uH
C5 4.7uF
J1
DAT3/CS
CMD/DI
VSS
VDD
CLK/SCLK
DAT0/DO
DAT1
DAT2
SD-CARD-SOCKET
JP1
JP2
JP3
JP4
JP5
Saanlima Electronics
TITLE: SDLogger
Document Number:
REV:
Date: 10/16/2010 5:45:20 PM
Sheet: 1/1
Released under the Creative Commons Attribution-NonCommercial-ShareAlike 3.0 License
http://creativecommons.org/licenses/by-nc-sa/3.0
Design by: Saanlima Electronics (www.saanlima.com)
Original OpenLog design by SparkFun (www.sparkfun.com)