Arrays

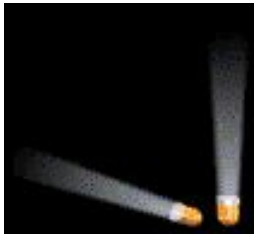

1D Array Representation In C++

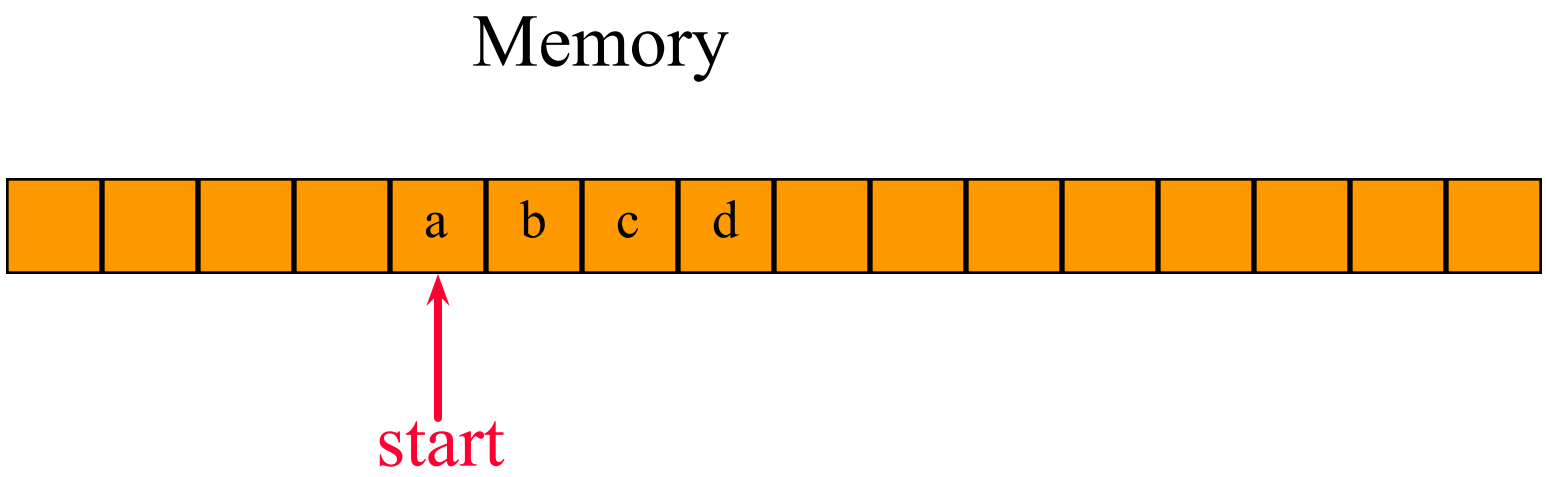

- 1-dimensional array x = [a, b, c, d]
- map into contiguous memory locations

- location(x[i]) = start + i

Space Overhead

Memory

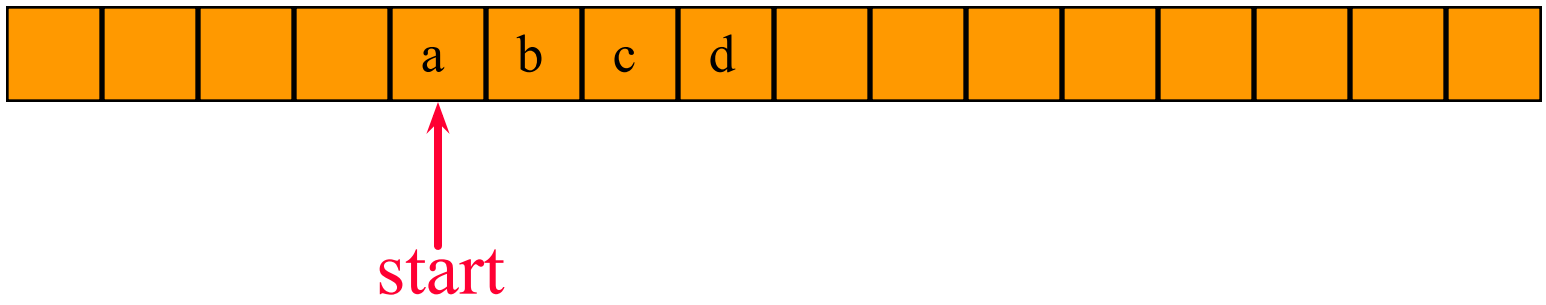

space overhead = 4 bytes for start

(excludes space needed for the elements of x)

2D Arrays

The elements of a 2-dimensional array a declared as:

```
int [][]a = new int[3][4];
```

may be shown as a table

a[0][0]	a[0][1]	a[0][2]	a[0][3]
a[1][0]	a[1][1]	a[1][2]	a[1][3]
a[2][0]	a[2][1]	a[2][2]	a[2][3]

Rows Of A 2D Array

a[0][0]	a[0][1]	a[0][2]	a[0][3]	→ row 0
a[1][0]	a[1][1]	a[1][2]	a[1][3]	→ row 1
a[2][0]	a[2][1]	a[2][2]	a[2][3]	→ row 2

Columns Of A 2D Array

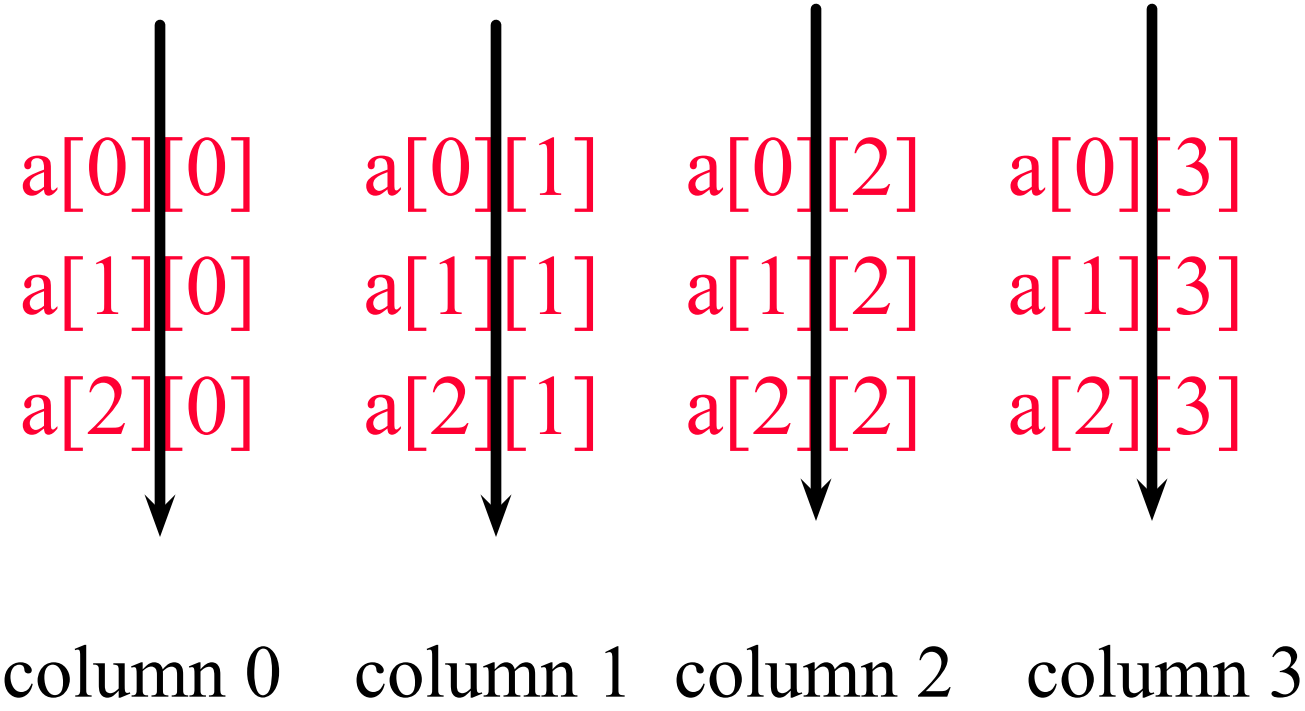

2D Array Representation In C++

2-dimensional array x

a, b, c, d

e, f, g, h

i, j, k, l

view 2D array as a 1D array of rows

x = [row0, row1, row 2]

row 0 = [a,b, c, d]

row 1 = [e, f, g, h]

row 2 = [i, j, k, l]

and store as 4 1D arrays

2D Array Representation In C++

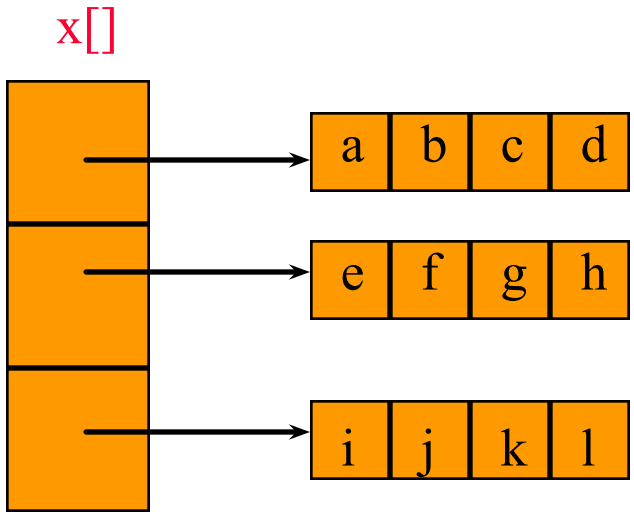

Space Overhead

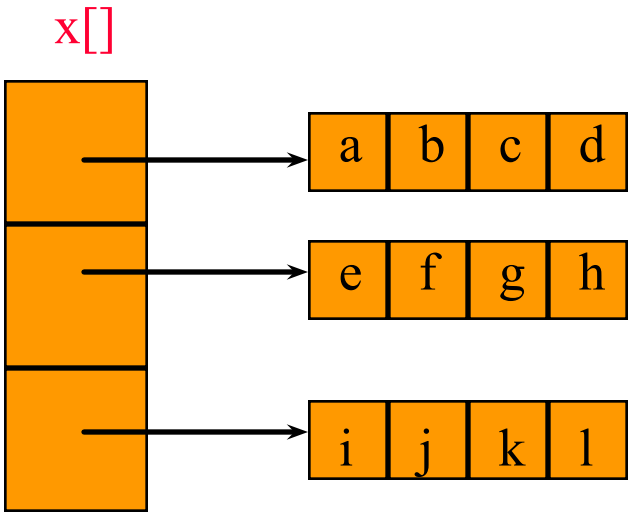

space overhead = overhead for 4 1D arrays

= 4 * 4 bytes

= 16 bytes

= (number of rows + 1) x 4 bytes

Array Representation In C++

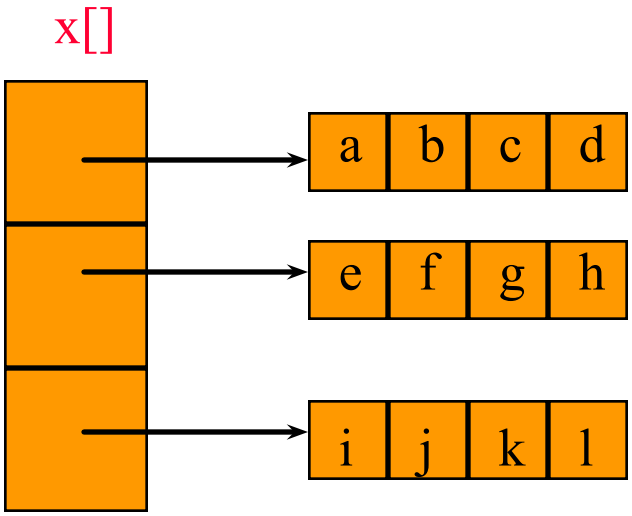

- This representation is called the array-of-arrays representation.
- Requires contiguous memory of size 3, 4, 4, and 4 for the 4 1D arrays.
- 1 memory block of size number of rows and number of rows blocks of size number of columns

Row-Major Mapping

- Example 3 x 4 array:

a b c d

e f g h

i j k l

- Convert into 1D array y by collecting elements by rows.
- Within a row elements are collected from left to right.
- Rows are collected from top to bottom.
- We get y[] = {a, b, c, d, e, f, g, h, i, j, k, l}

row 0	row 1	row 2	…	row i		

Locating Element x[i][j]

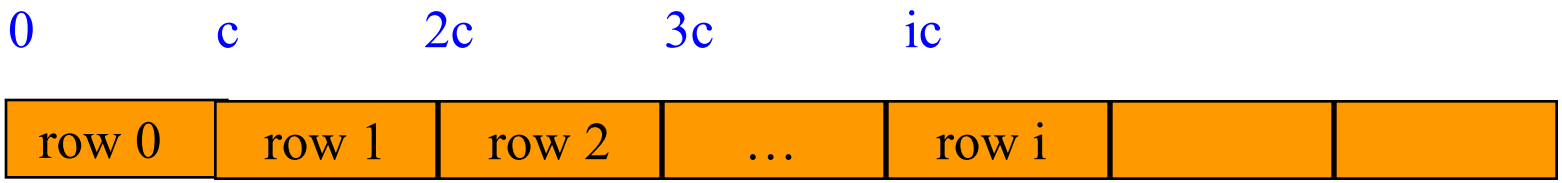

- assume x has r rows and c columns
- each row has c elements
- i rows to the left of row i
- so ic elements to the left of x[i][0]
- so x[i][j] is mapped to position

  ic + j of the 1D array

Space Overhead

row 0	row 1	row 2	…	row i		

4 bytes for start of 1D array +

4 bytes for c (number of columns)

= 8 bytes

Disadvantage

Need contiguous memory of size rc.

Column-Major Mapping

a b c d

e f g h

i j k l

- Convert into 1D array y by collecting elements by columns.
- Within a column elements are collected from top to bottom.
- Columns are collected from left to right.
- We get y = {a, e, i, b, f, j, c, g, k, d, h, l}

Matrix

Table of values. Has rows and columns, but numbering begins at 1 rather than 0.

a b c d	row 1
e f g h	row 2
i j k l	row 3

- Use notation x(i,j) rather than x[i][j].
- May use a 2D array to represent a matrix.

Shortcomings Of Using A 2D Array For A Matrix

- Indexes are off by 1.
- C++ arrays do not support matrix operations such as add, transpose, multiply, and so on.
  - Suppose that x and y are 2D arrays. Can't do x + y, x –y, x * y, etc. in Java.
- Develop a class Matrix for object-oriented support of all matrix operations.

Diagonal Matrix

An n x n matrix in which all nonzero terms are on the diagonal.

Diagonal Matrix

$$\begin{matrix} 1 & 0 & 0 & 0 \\ 0 & 2 & 0 & 0 \\ 0 & 0 & 3 & 0 \\ 0 & 0 & 0 & 4 \end{matrix}$$

- $x(i,j)$ is on diagonal iff $i = j$
- number of diagonal elements in an $n \times n$ matrix is n
- non diagonal elements are zero
- store diagonal only vs n^2 whole

Lower Triangular Matrix

An n x n matrix in which all nonzero terms are either on or below the diagonal.

$$\begin{matrix} 1 & 0 & 0 & 0 \\ 2 & 3 & 0 & 0 \\ 4 & 5 & 6 & 0 \\ 7 & 8 & 9 & 10 \end{matrix}$$

- $x(i,j)$ is part of lower triangle iff $i >= j$.
- number of elements in lower triangle is $1 + 2 + \ldots + n = n(n+1)/2$.
- store only the lower triangle

Array Of Arrays Representation

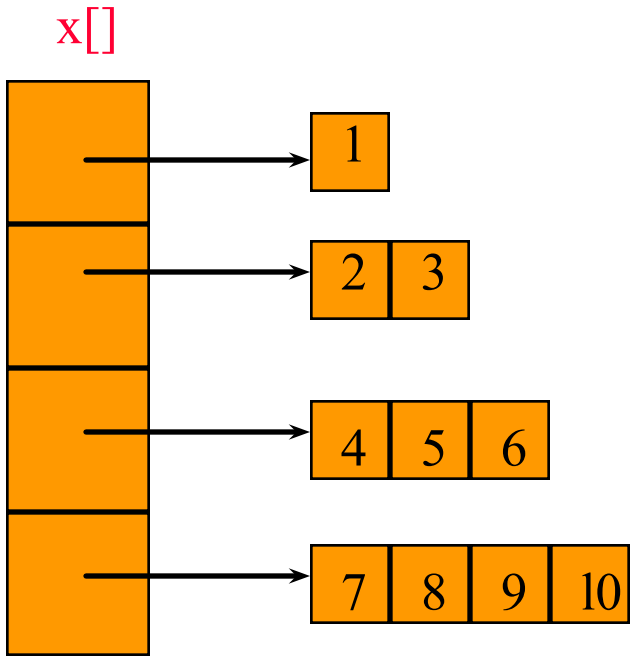

Use an irregular 2-D array … length of rows is not required to be the same.

Creating And Using An Irregular Array

```
// declare a two-dimensional array variable
// and allocate the desired number of rows
int ** irregularArray = new int* [numberOfRows];

// now allocate space for the elements in each row
for (int i = 0; i < numberOfRows; i++)
   irregularArray[i] = new int [length[i]];

// use the array like any regular array
irregularArray[2][3] = 5;
irregularArray[4][6] = irregularArray[2][3] + 2;
irregularArray[1][1] += 3;
```

Map Lower Triangular Array Into A 1D Array

Use row-major order, but omit terms that are not part of the lower triangle.

For the matrix

$$\begin{matrix} 1 & 0 & 0 & 0 \\ 2 & 3 & 0 & 0 \\ 4 & 5 & 6 & 0 \\ 7 & 8 & 9 & 10 \end{matrix}$$

we get

1, 2, 3, 4, 5, 6, 7, 8, 9, 10

Index Of Element [i][j]

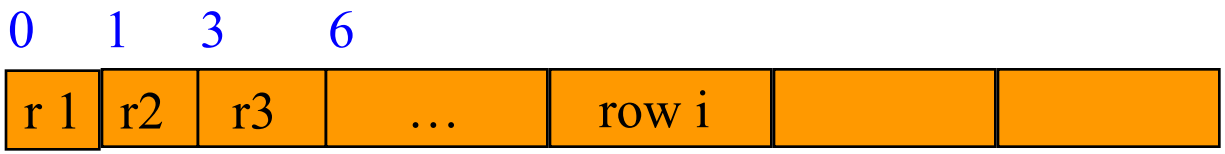

- Order is: row 1, row 2, row 3, …
- Row i is preceded by rows 1, 2, …, i-1
- Size of row i is i.
- Number of elements that precede row i is

  $1 + 2 + 3 + \ldots + i-1 = i(i-1)/2$
- So element (i,j) is at position $i(i-1)/2 + j - 1$ of the 1D array.