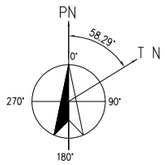

NO.	DESCRIPTION	Q'TY	REMARK
1	14" PIPE S-160 A335 GR.P22	0.2 M	

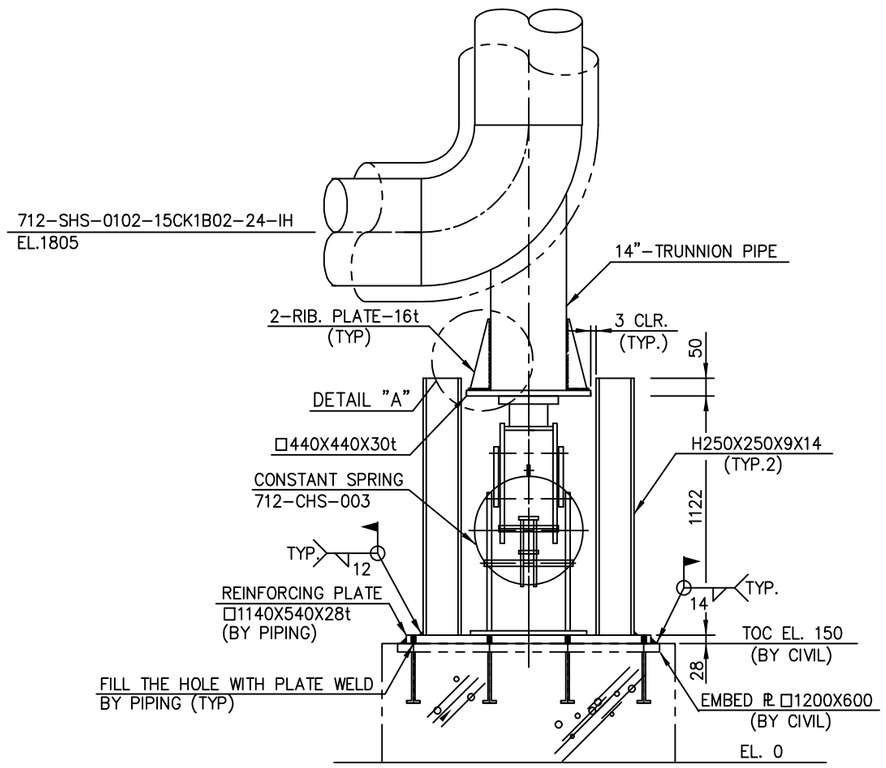

LOOKING SOUTH

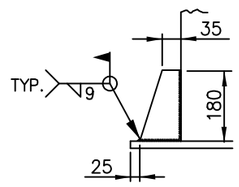

DETAIL "A"

NOTES

1. ALL DIMENSIONS ARE IN mm UNLESS OTHERWISE NOTED.
2. MATERIAL (ASTM)
   (1) CHANNEL : A36

MFC PROJECT

GS Caltex Corporation
YEOSU , KOREA

GS Engineering & Construction

TITLE: SPECIAL PIPE SUPPORT
712-SPS-5042

DRAWING No.	712-SPS-5042	PAGE 1 OF 1	REV. 0