NO.	DESCRIPTION	Q'TY	REMARK
1	C-100X50X6.5X10	6.4M	

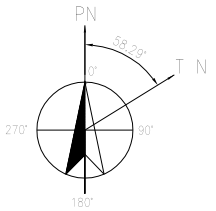

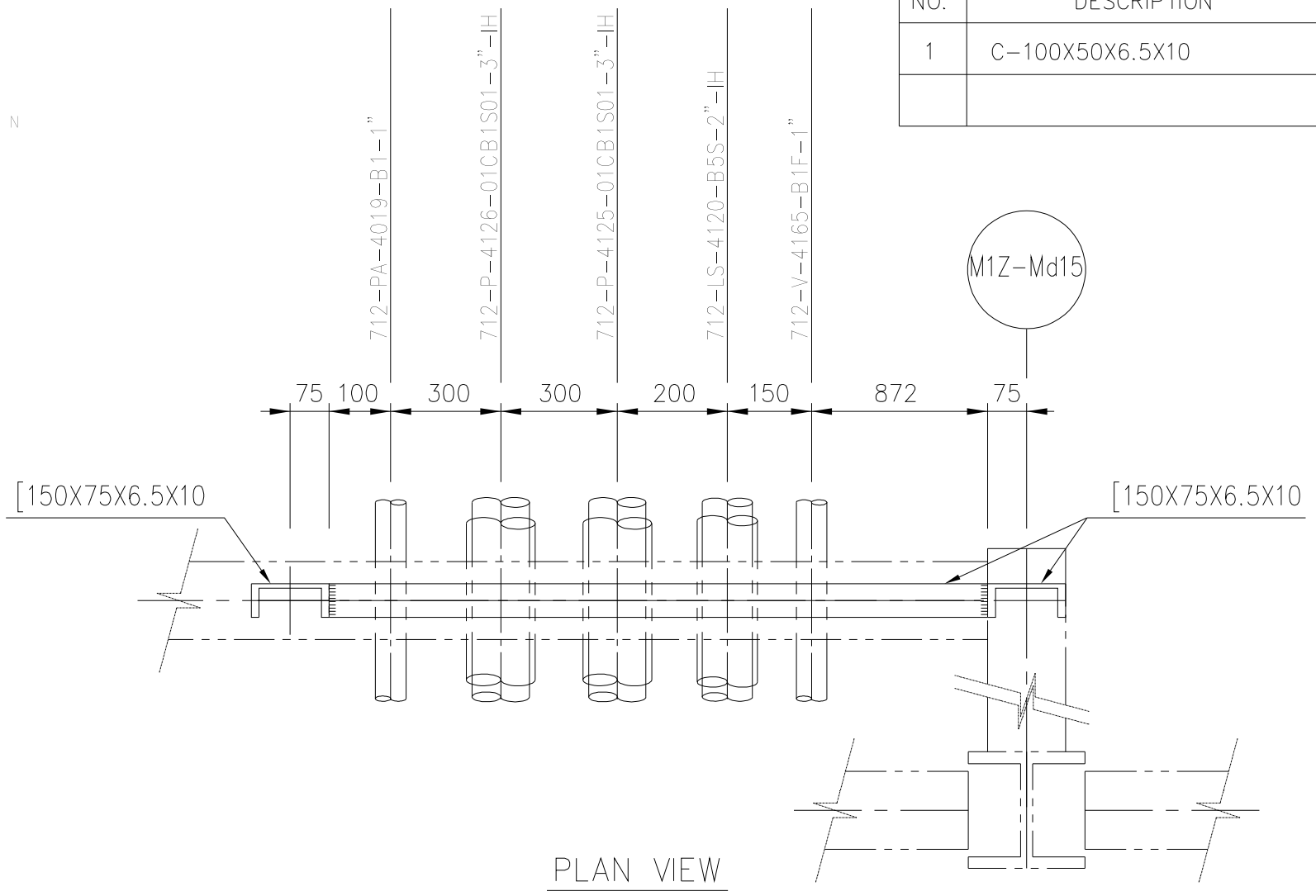

PLAN VIEW

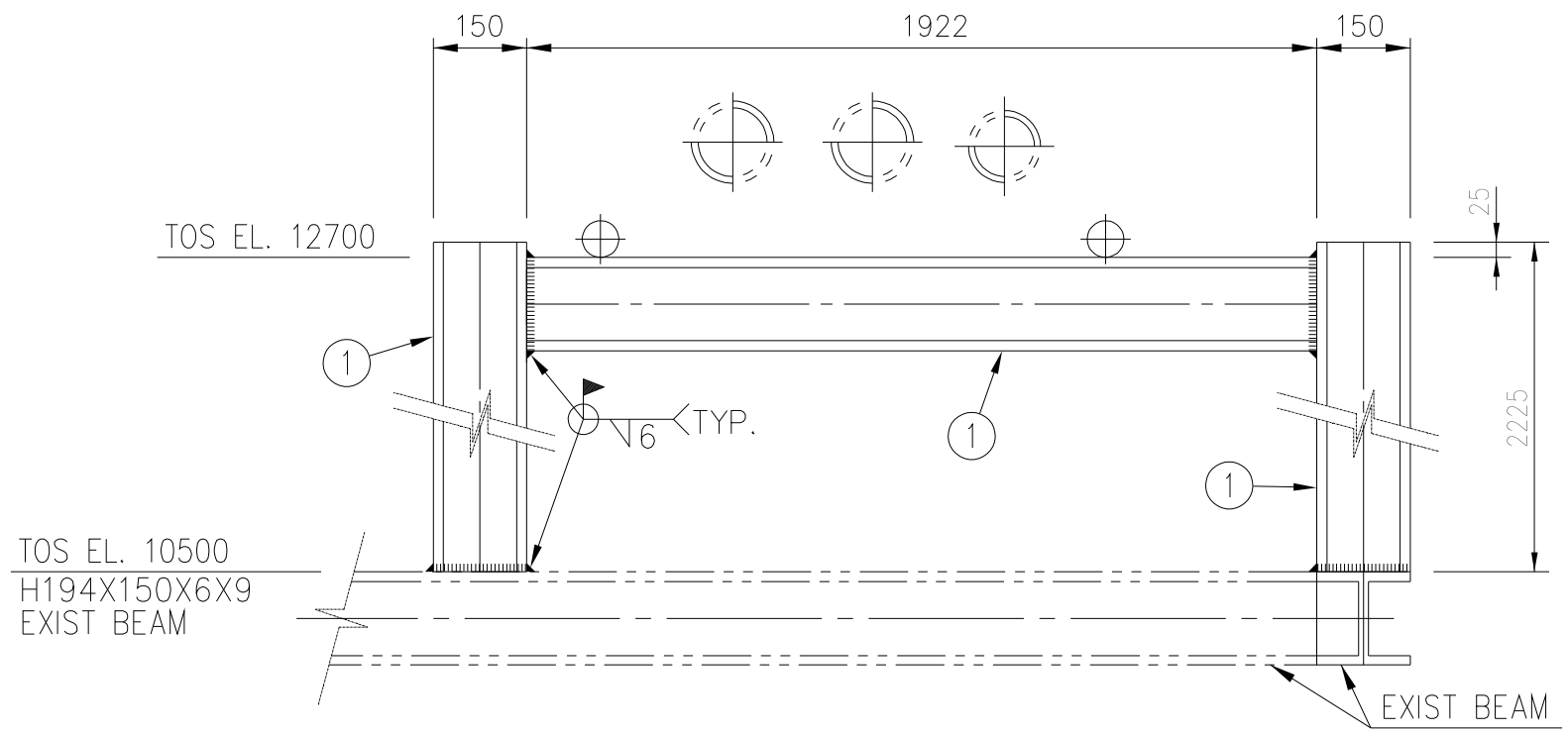

LOOKING NORTH

NOTES

1. ALL DIMENSIONS ARE IN mm UNLESS OTHERWISE NOTED.
2. MATERIAL(ASTM)
   ANGLE/CHANNEL : A36
   PLATE : A36

MARK NO.	MEMBER SIZE
2	L 65 X 65 X 6
3	L 75 X 75 X 9
4	[100X50X5X7.5
5	[150X75X6.5X10
6	H150X150X7X10

MFC PROJECT

GS Caltex Corporation
YEOSU , KOREA

GS Engineering & Construction

TITLE: SPECIAL PIPE SUPPORT (712-SPS-4022)

DRAWING No.	712-SPS-4022	PAGE 1 OF 1	REV. 0