NO.	DESCRIPTION	Q'TY	REMARK
1	20" PIPE S-80 A106 GR.B	0.5 M	

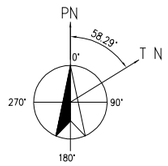

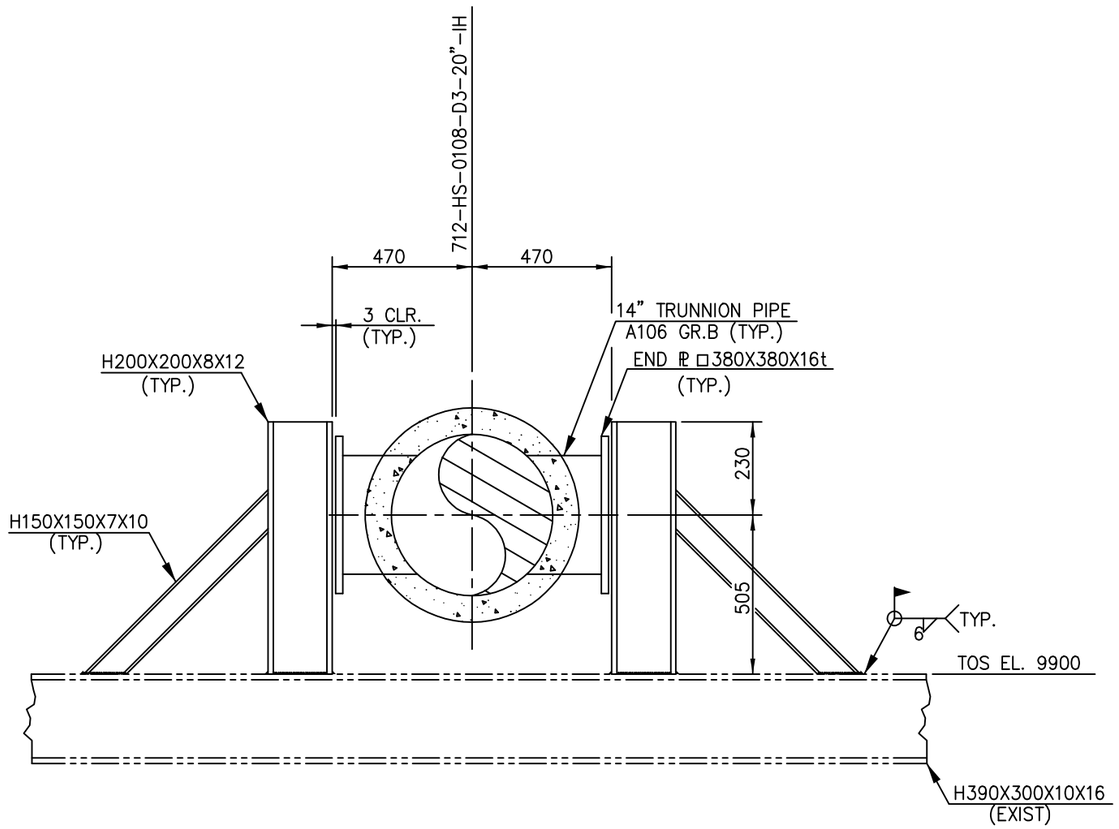

LOOKING EAST

NOTES

1. ALL DIMENSIONS ARE IN mm UNLESS OTHERWISE NOTED.
2. MATERIAL (ASTM)
   (1) PLATE, ANGLE, CHANNEL : A36

MFC PROJECT

GS
YEOSU , KOREA

GS Engineering & Construction

TITLE: SPECIAL PIPE SUPPORT
712-SPS-5031

DRAWING No.	712-SPS-5031	PAGE 1 OF 1	REV. 0