VGD

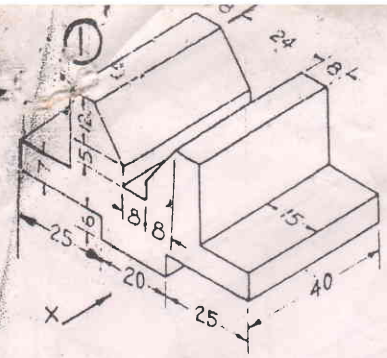
1
24
8
15
5
12
8
8
25
6
20
25
40
X

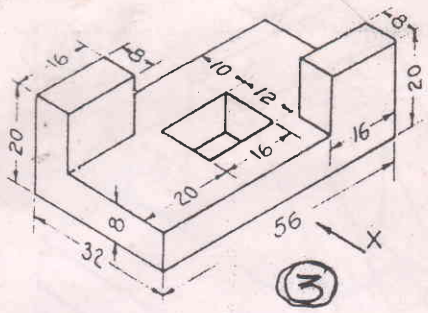
8
16
8
10
12
16
20
20
16
8
20
56
32
X

3

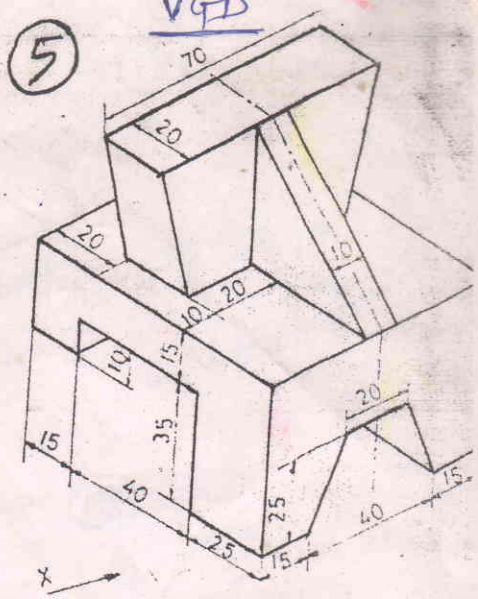
5
70
20
20
10
20
10
15
10
15
35
40
20
25
15
40
25
15
X

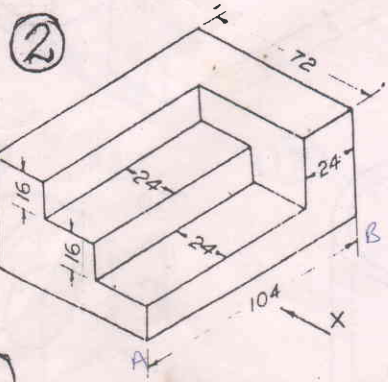
2
72
24
24
16
24
16
B
A
104
X

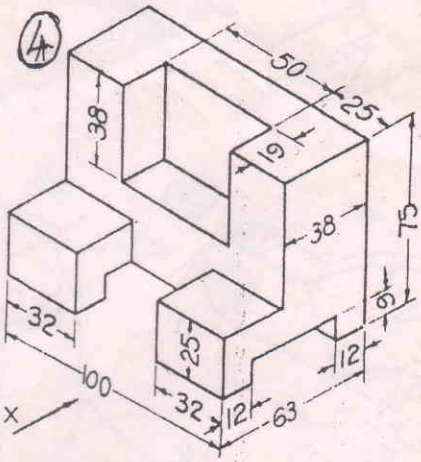
4
50
25
38
19
38
75
9
32
25
12
100
32
12
63
X

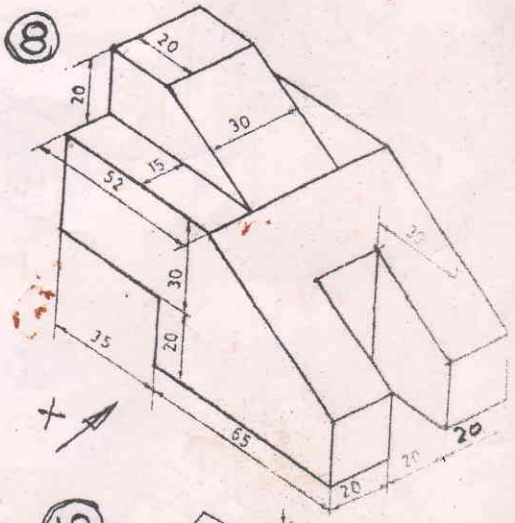
8
20
20
30
15
52
30
35
20
65
20
20
20
X

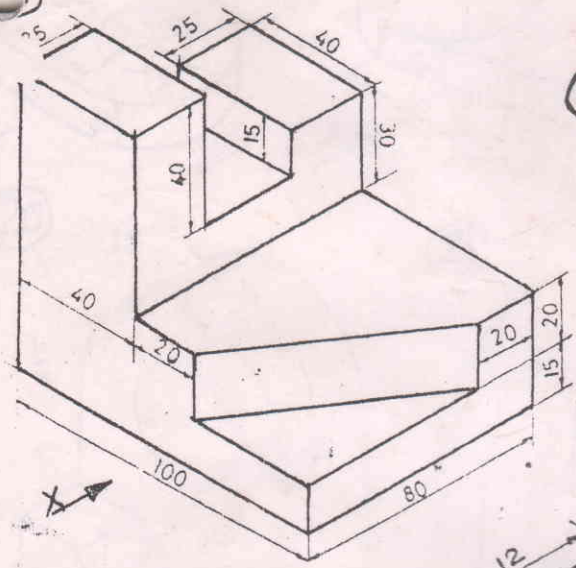
3
35
25
40
15
40
30
40
20
20
20
15
100
80
X

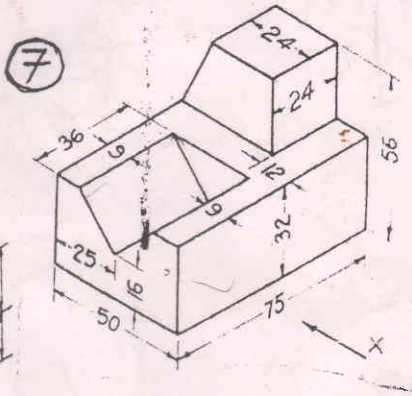
7
24
24
36
9
12
9
32
56
25
16
50
75
X

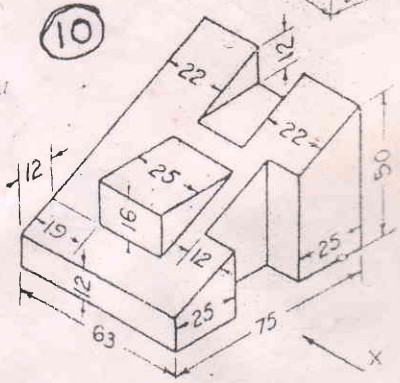
10
22
12
22
12
25
50
19
16
12
25
12
25
63
75
X

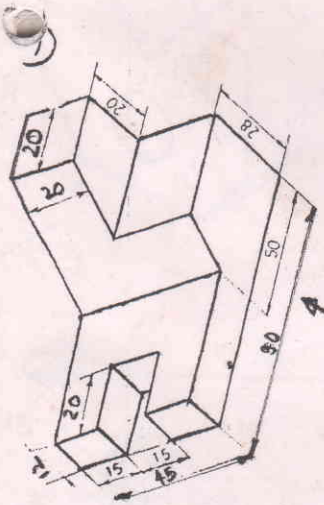
9
20
28
20
20
50
30
20
15
15
45
71

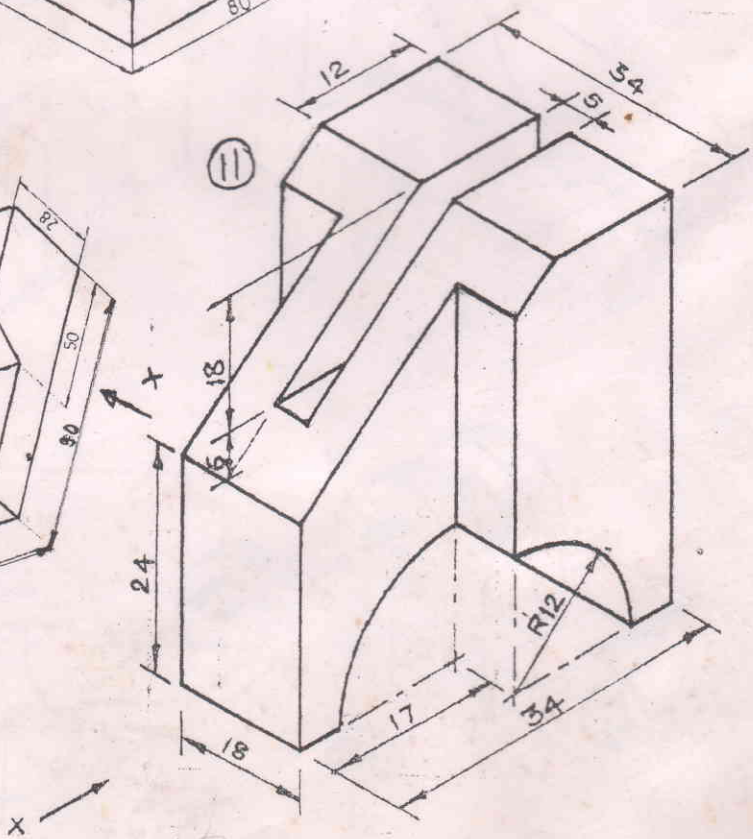
11
12
54
5
18
X
24
6
R12
17
34
18
X

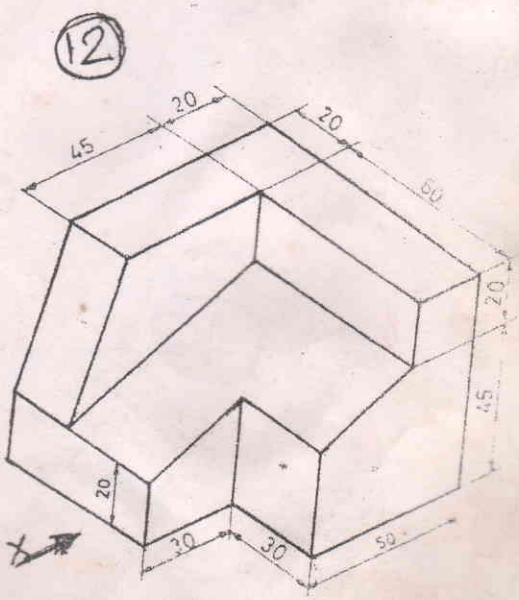
12
20
20
45
60
20
45
20
30
30
50
X

HSC

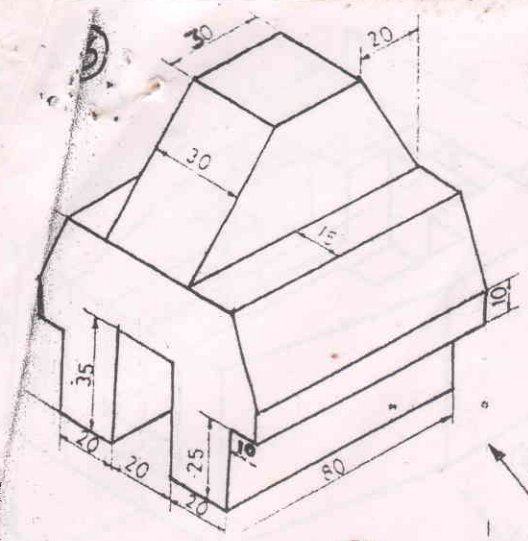
5
30
20
30
15
10
35
20
20
25
10
20
60

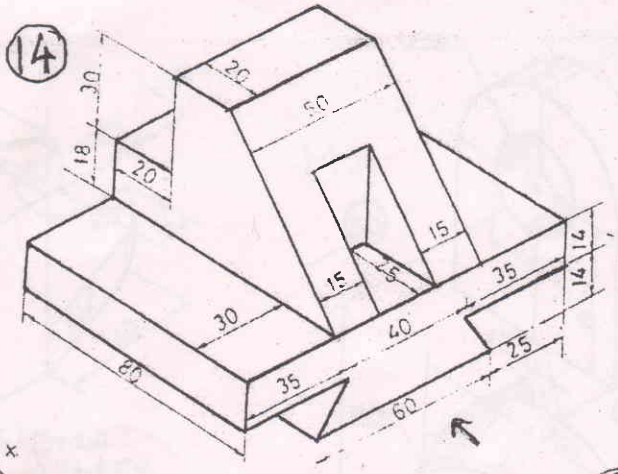
14
30
20
18
20
50
15
15
5
35
14
14
30
40
25
80
35
60

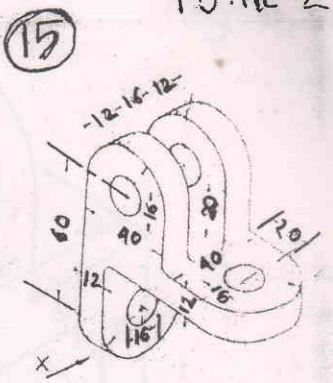
15
12
16
12
8
16
60
40
16
20
40
16
12
12
16

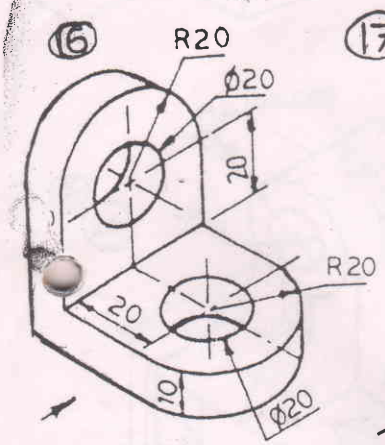
16
R20
Ø20
20
R20
20
20
Ø20

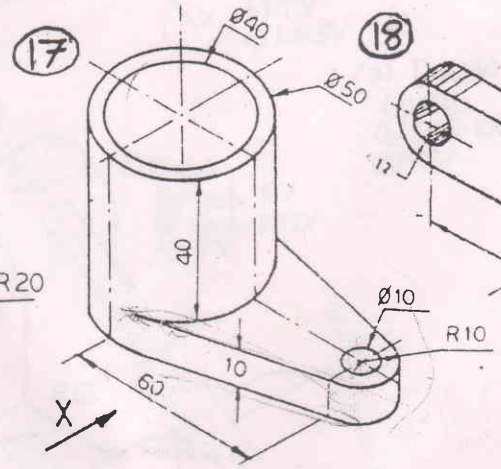
17
Ø40
Ø50
40
Ø10
R10
60
10
X

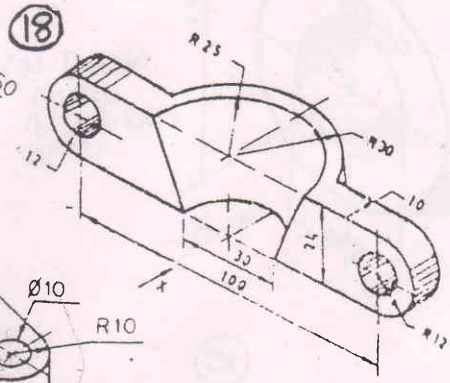
18
R25
R30
12
10
24
33
100
R12

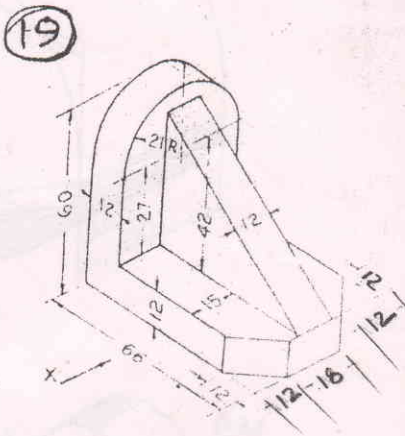
19
60
21
27
42
12
12
12
12
12
12
12
12
16
60

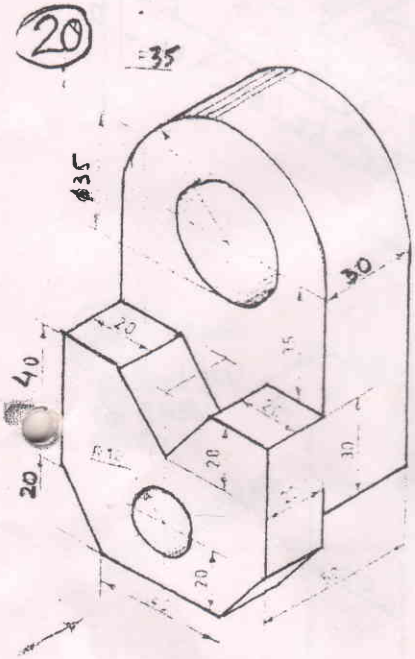
20
35
Ø35
30
40
20
20
R10
20
20
30

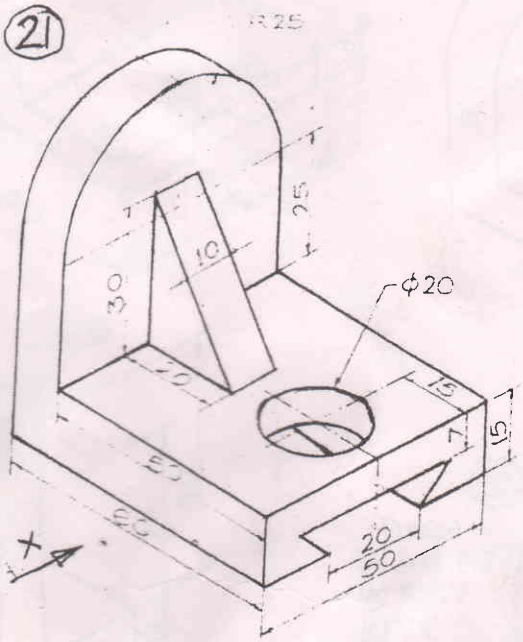
21
R25
25
30
10
Ø20
15
7
15
20
50

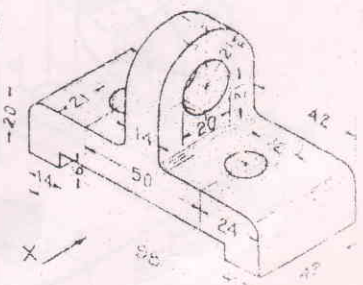
22
20
21
20
42
14
8
50
24
X

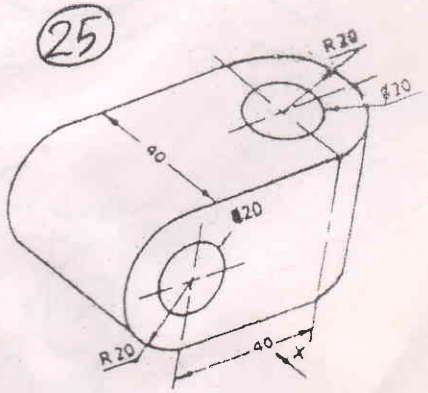
25
R20
Ø20
40
Ø20
R20
40
X

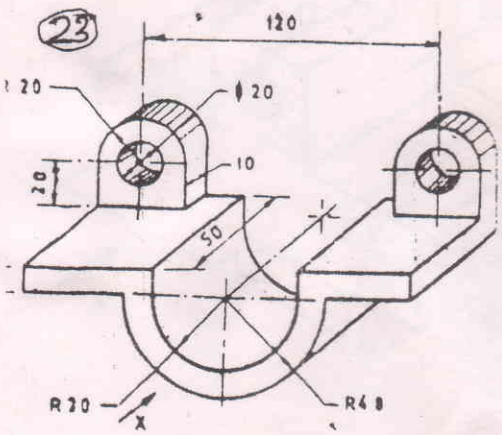
23
120
20
Ø20
10
20
50
R20
R40
X

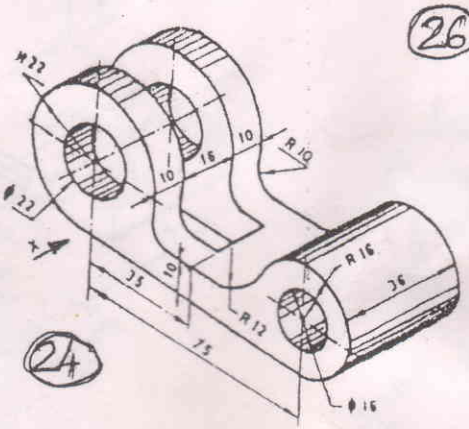
R22
Ø22
10
15
10
R10
R16
36
35
10
R12
35
Ø16
X

24

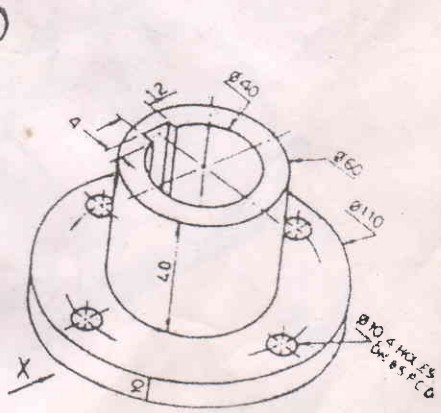
26
12
Ø40
9
Ø60
Ø110
40
Ø10 4 HOLES EQUISPACED
8

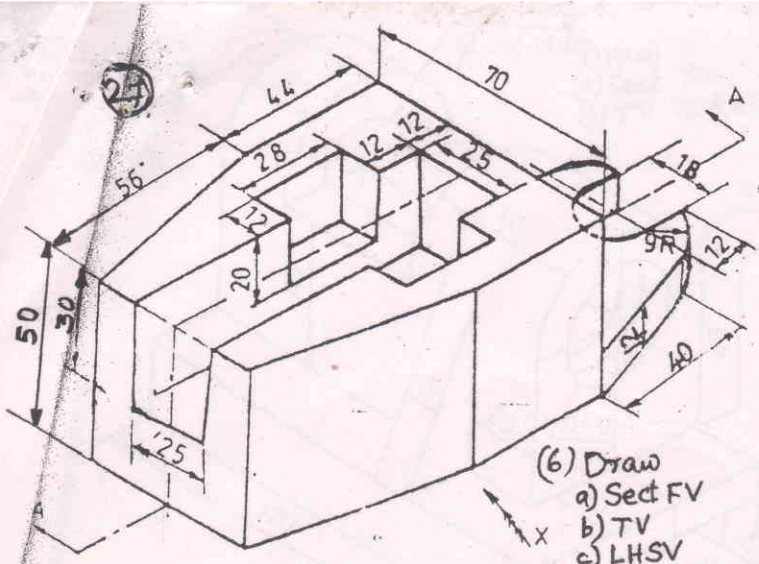

(6) Draw
a) Sect FV
b) TV
c) LHSV

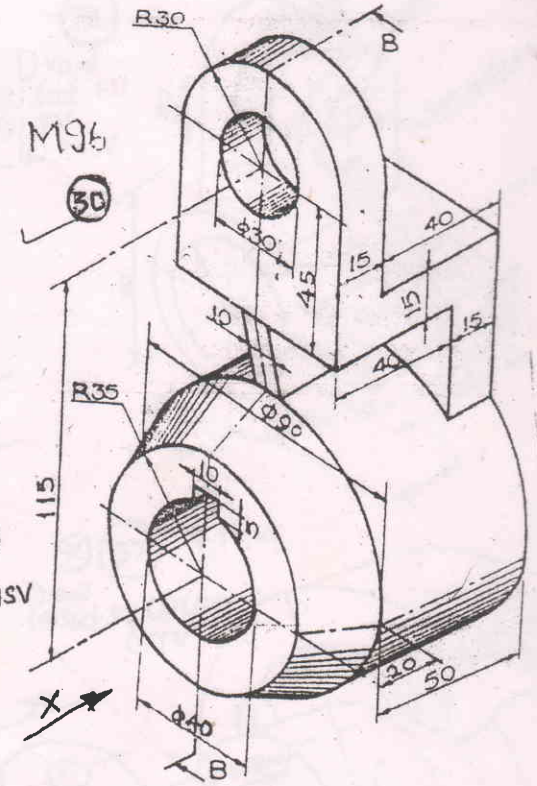

(7) Draw
(a) FV
(b) Sect-RHSV
(c) TV.

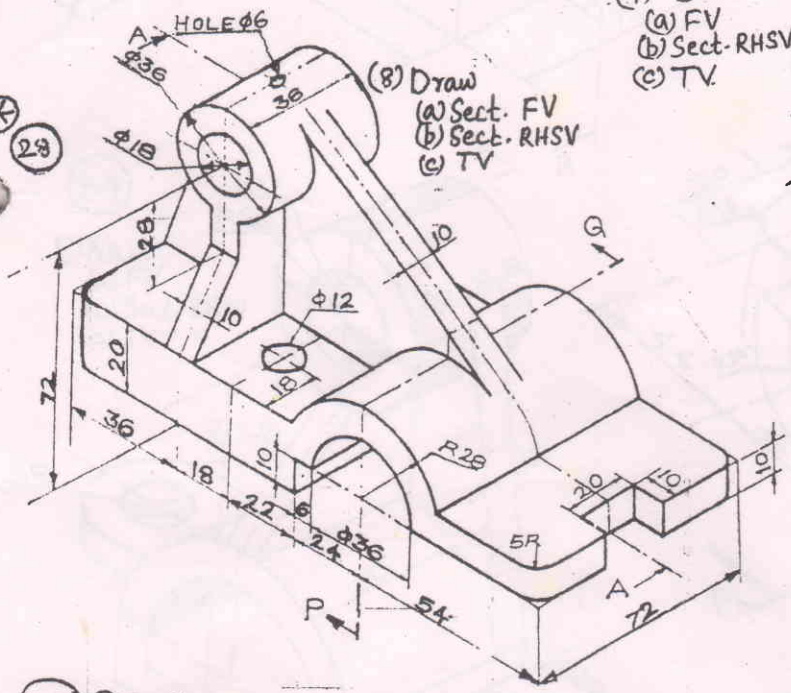

(8) Draw
(a) Sect. FV
(b) Sect. RHSV
(c) TV

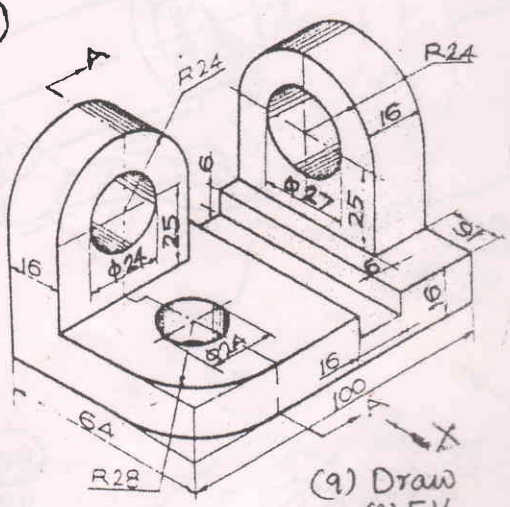

(9) Draw
(a) FV
(b) Sect LHSV
(c) TV

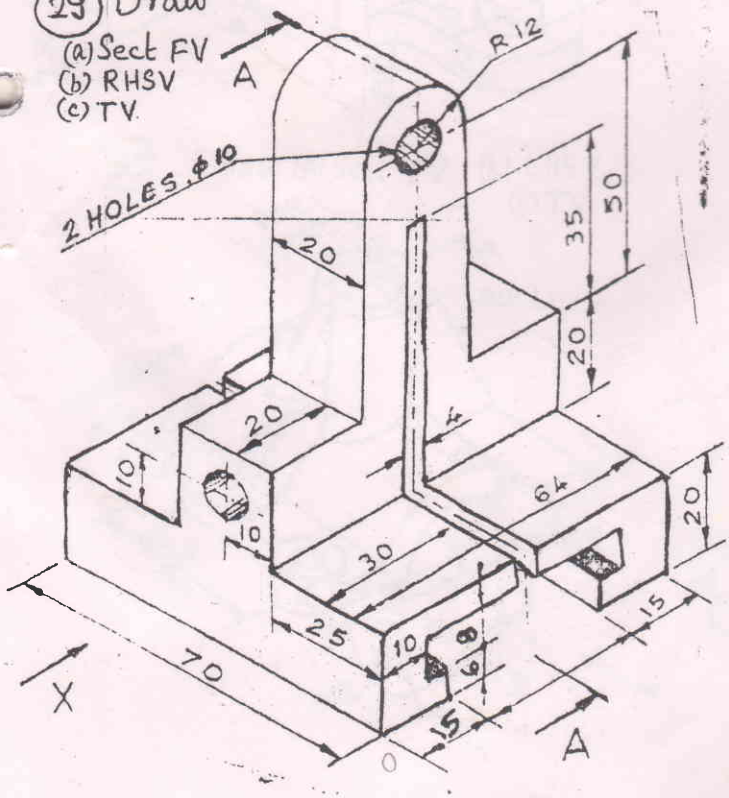

(29) Draw
(a) Sect FV
(b) RHSV
(c) TV.

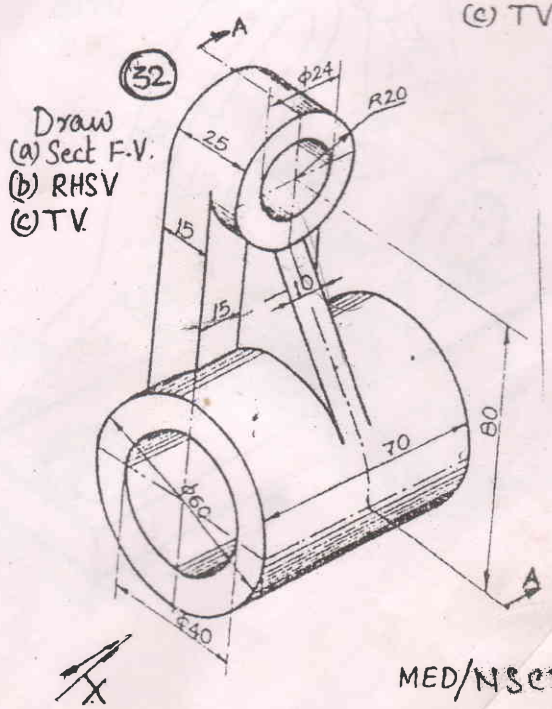

Draw
(a) Sect F.V.
(b) RHSV
(c) TV.

MED/NSCF

33

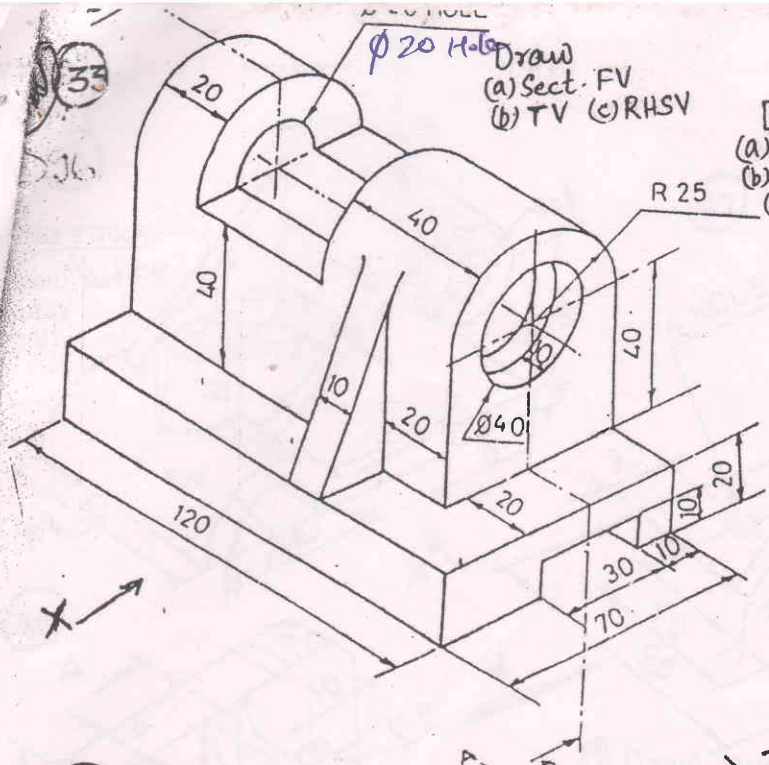

Draw
(a) Sect. FV
(b) TV (c) RHSV

36

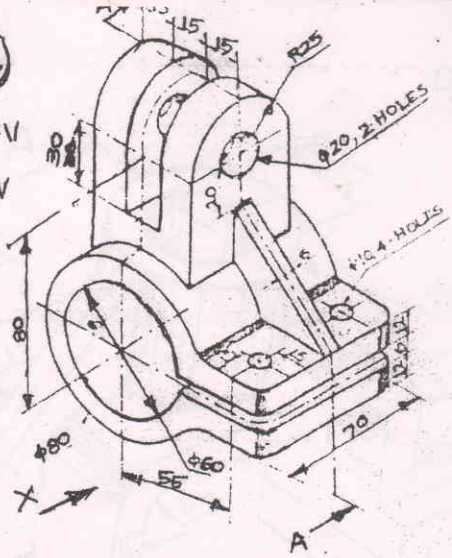

Draw
(a) Sect FV
(b) TV
(c) RHSV

37 · M94

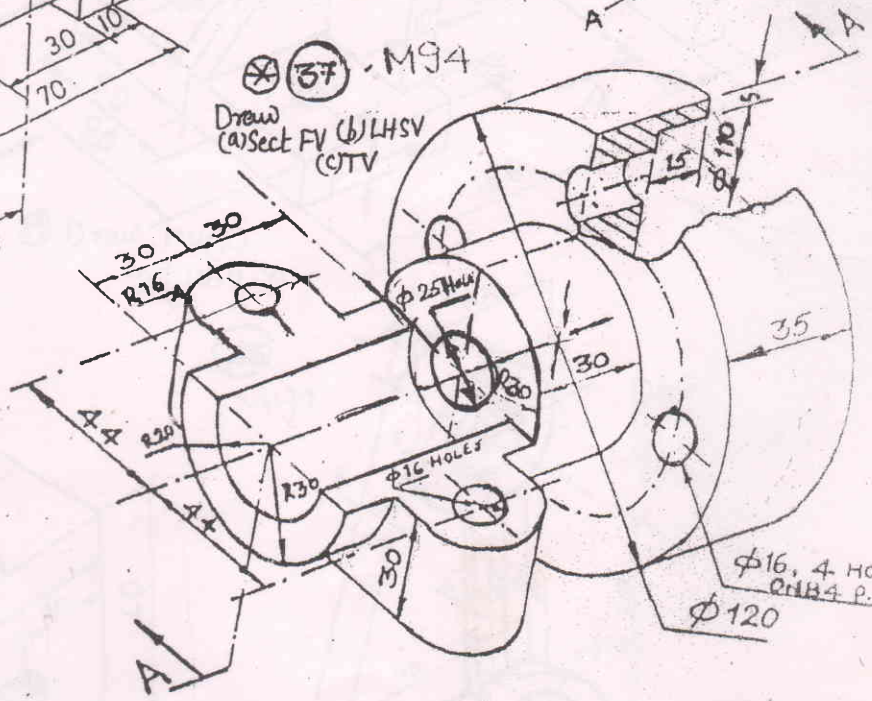

Draw
(a) Sect FV (b) LHSV
(c) TV

34

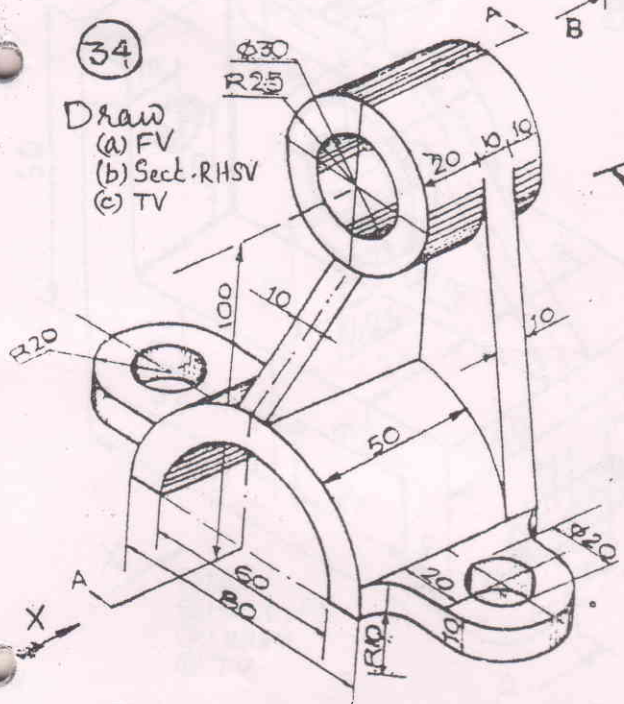

Draw
(a) FV
(b) Sect. RHSV
(c) TV

35 Draw (a) Sect FV (b) LHSV
(c) TV

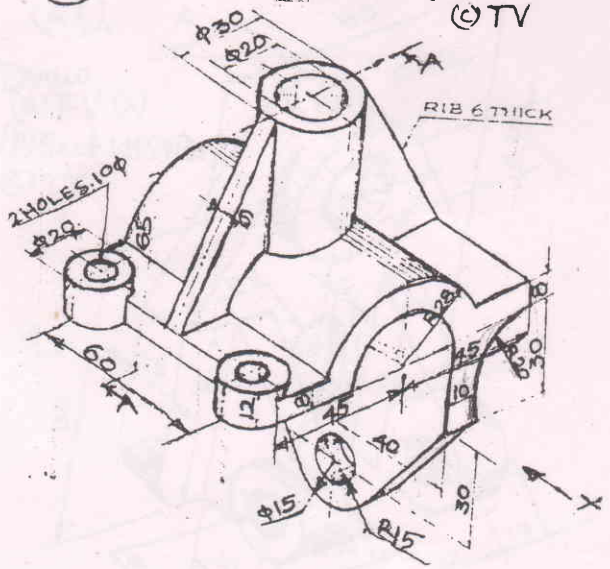

38

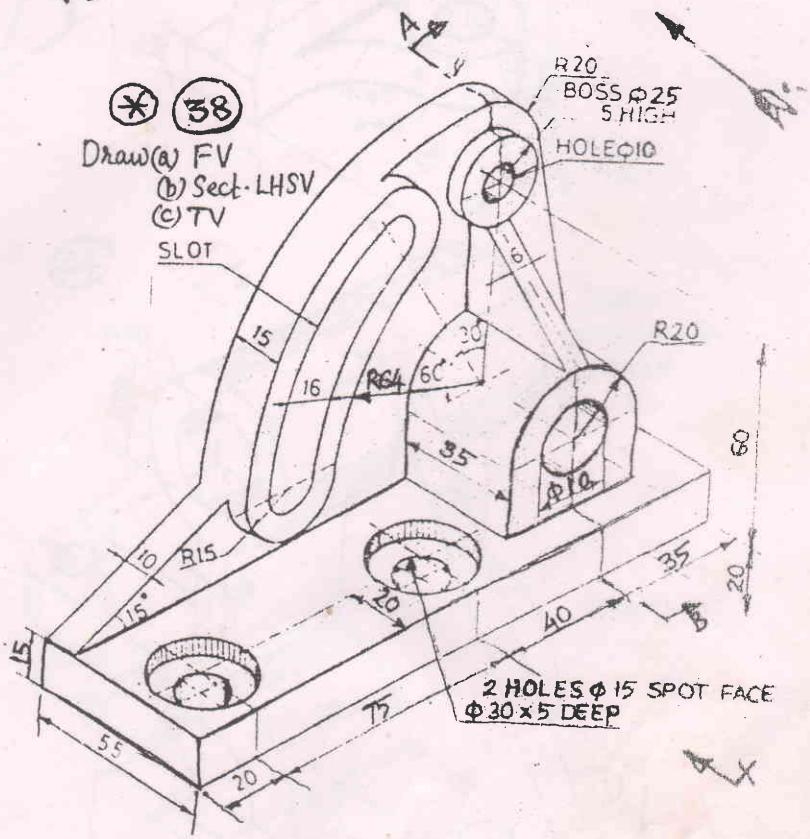

Draw (a) FV
(b) Sect. LHSV
(c) TV

MED/NSC

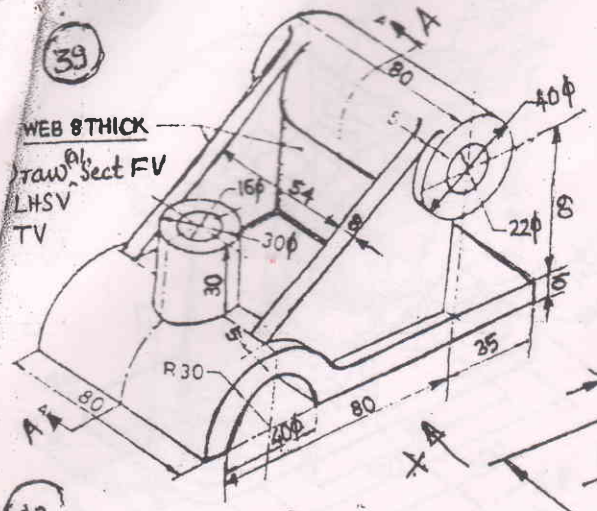

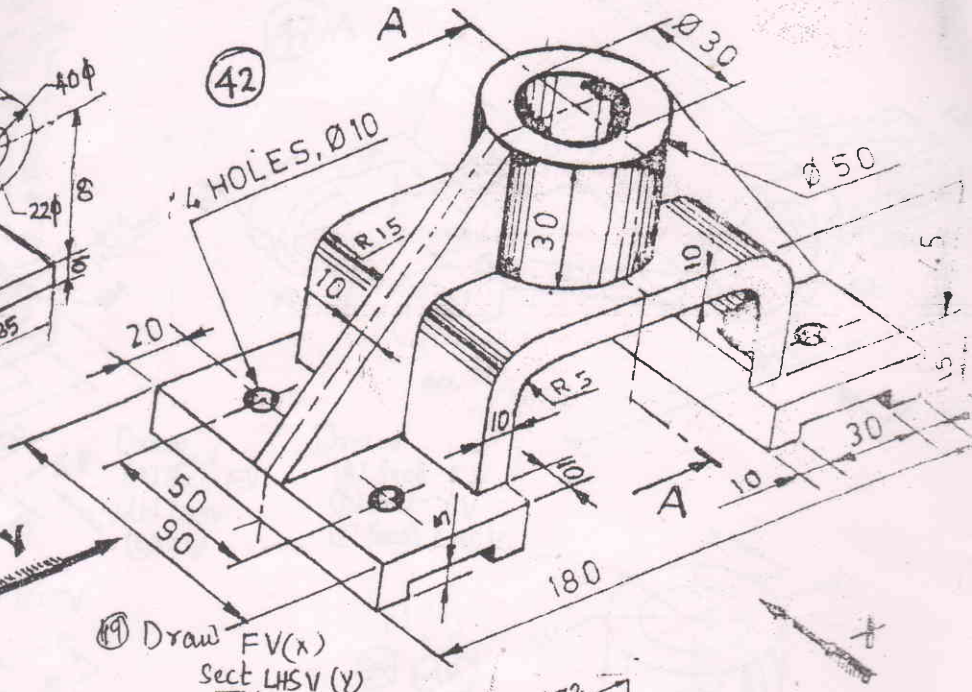

(19) Draw FV(x)
Sect LHSV (Y)
TV

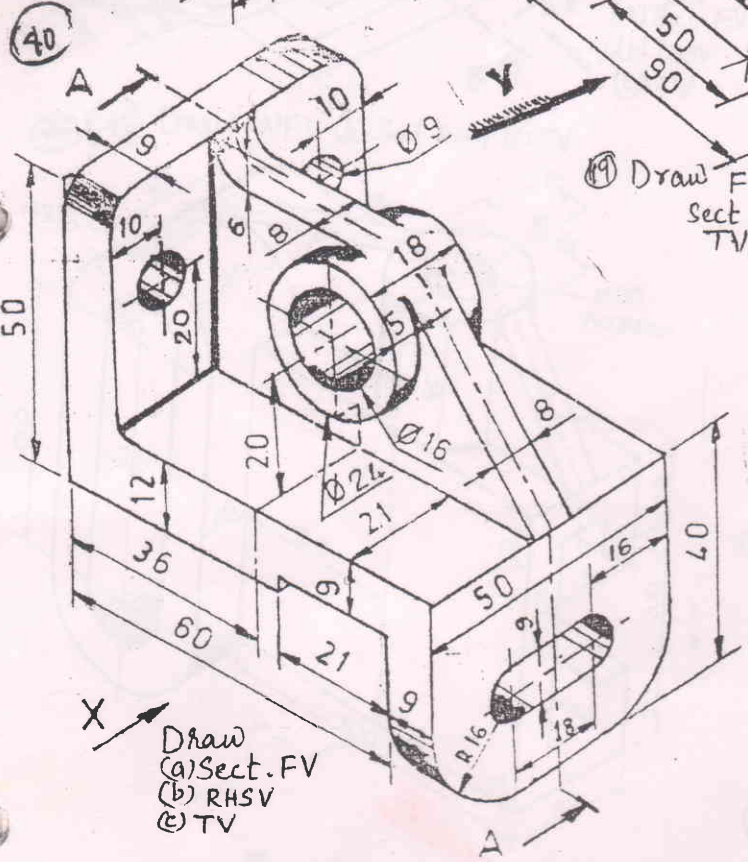

Draw
(a) Sect. FV
(b) RHSV
(c) TV

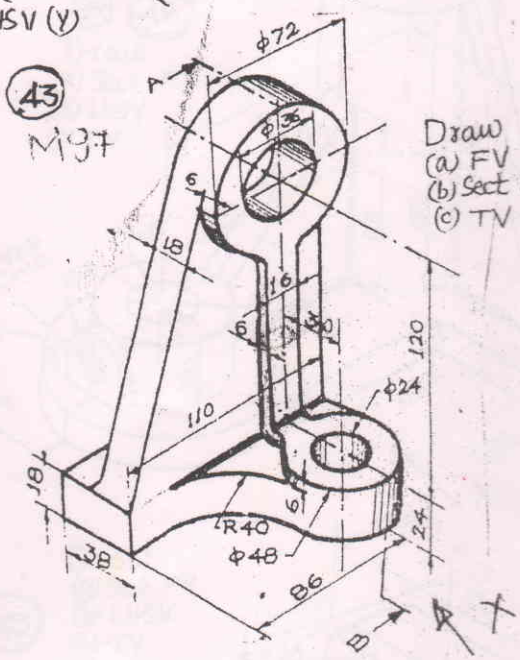

Draw
(a) FV
(b) Sect LHSV
(c) TV

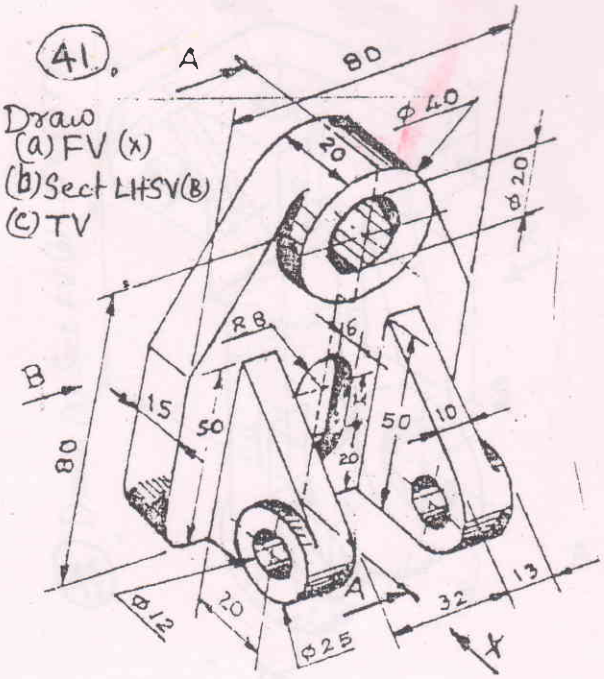

Draw
(a) FV (x)
(b) Sect LHSV (B)
(c) TV

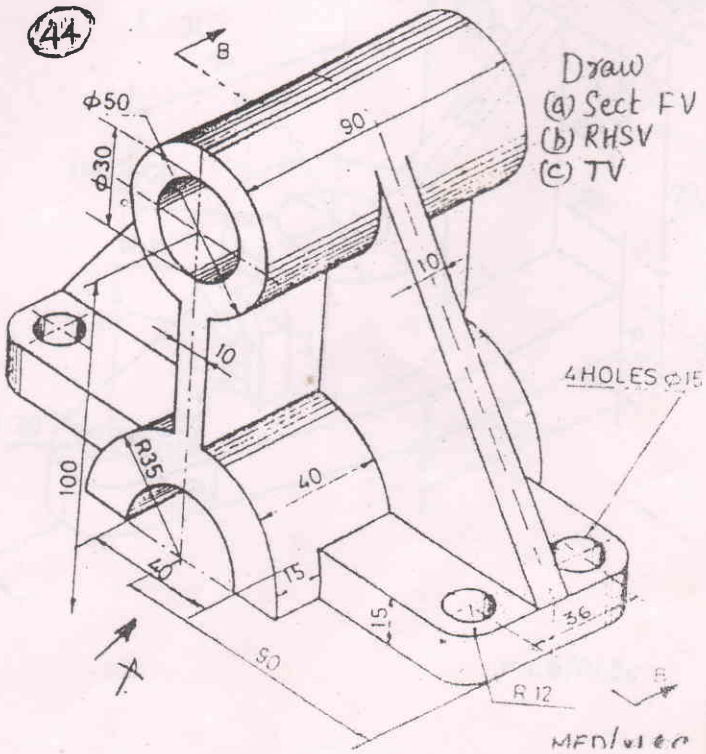

Draw
(a) Sect FV
(b) RHSV
(c) TV

(45)

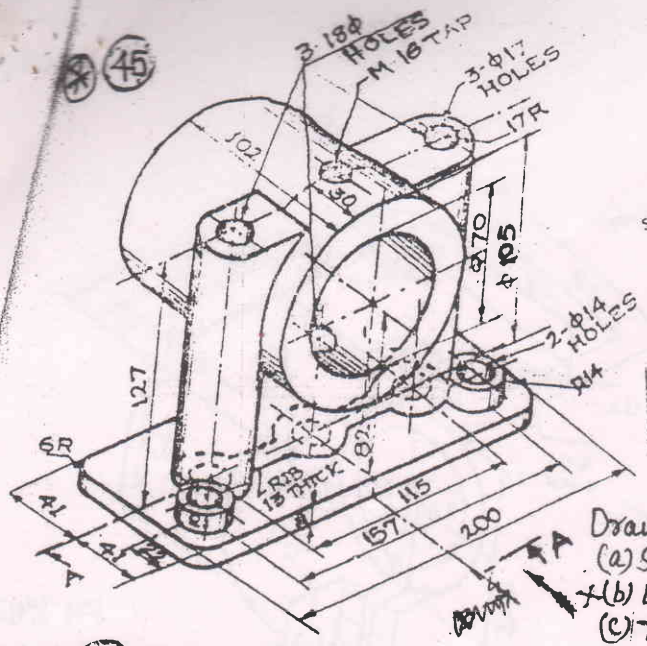

Draw (half)
(a) Sect. FV
(b) LHSV
(c) TV

(47) A

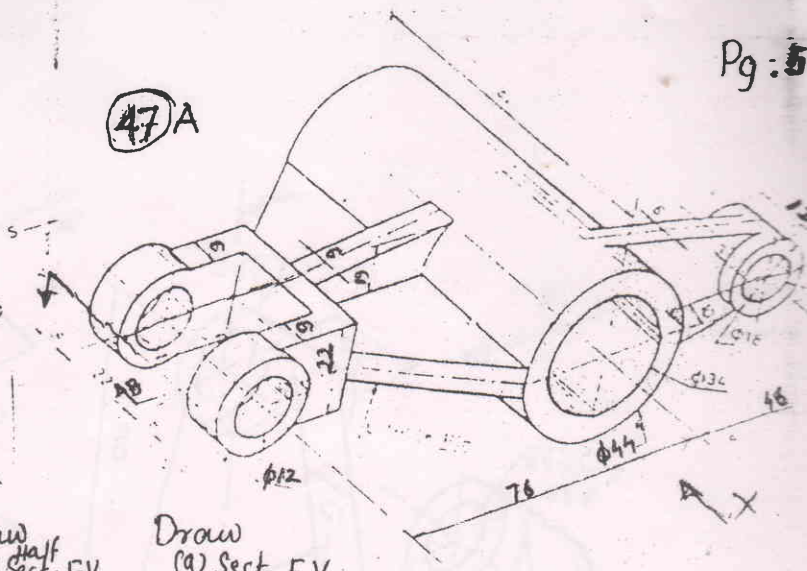
S
S
S

(50) Draw Sect FV TV & LHSV

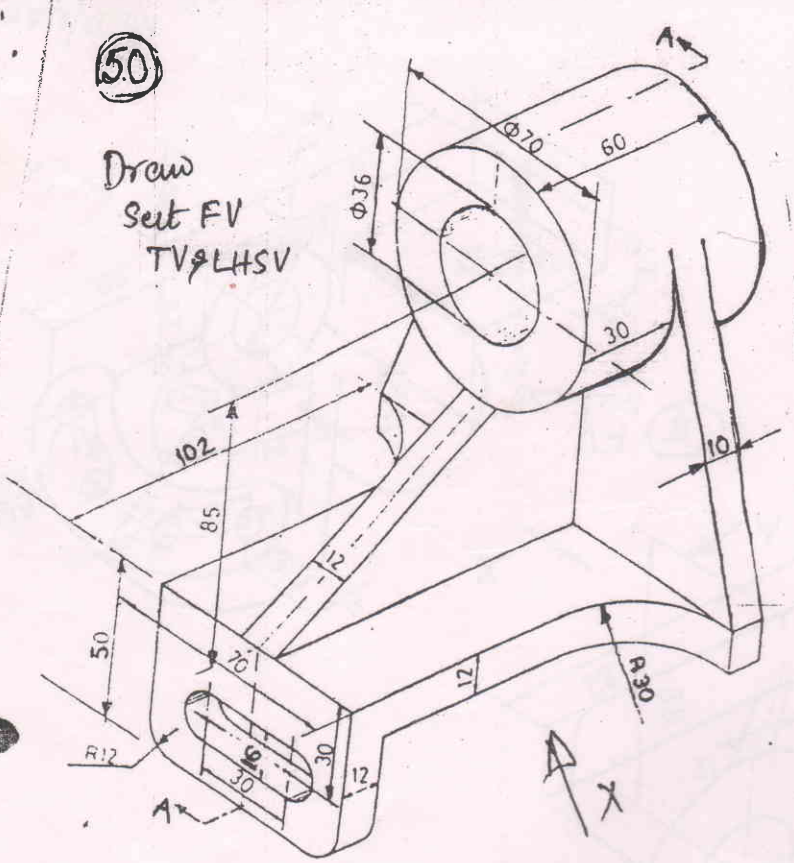

(51) Draw Sect FV TV & LHSV

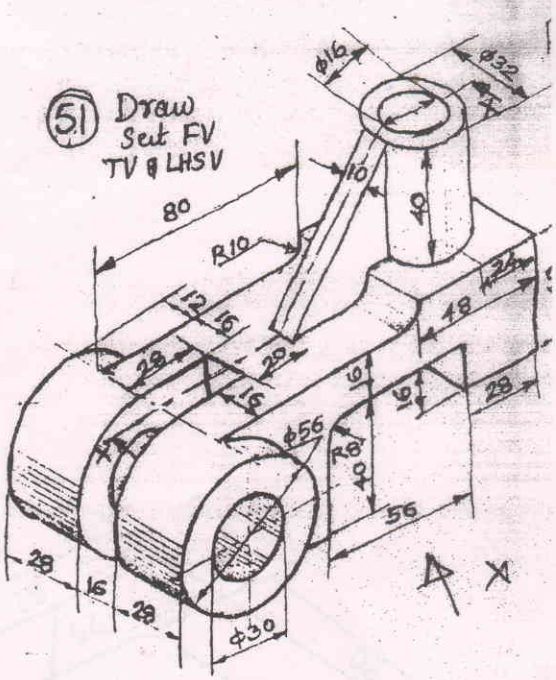

(52) Draw Sect FV, RHSV & TV

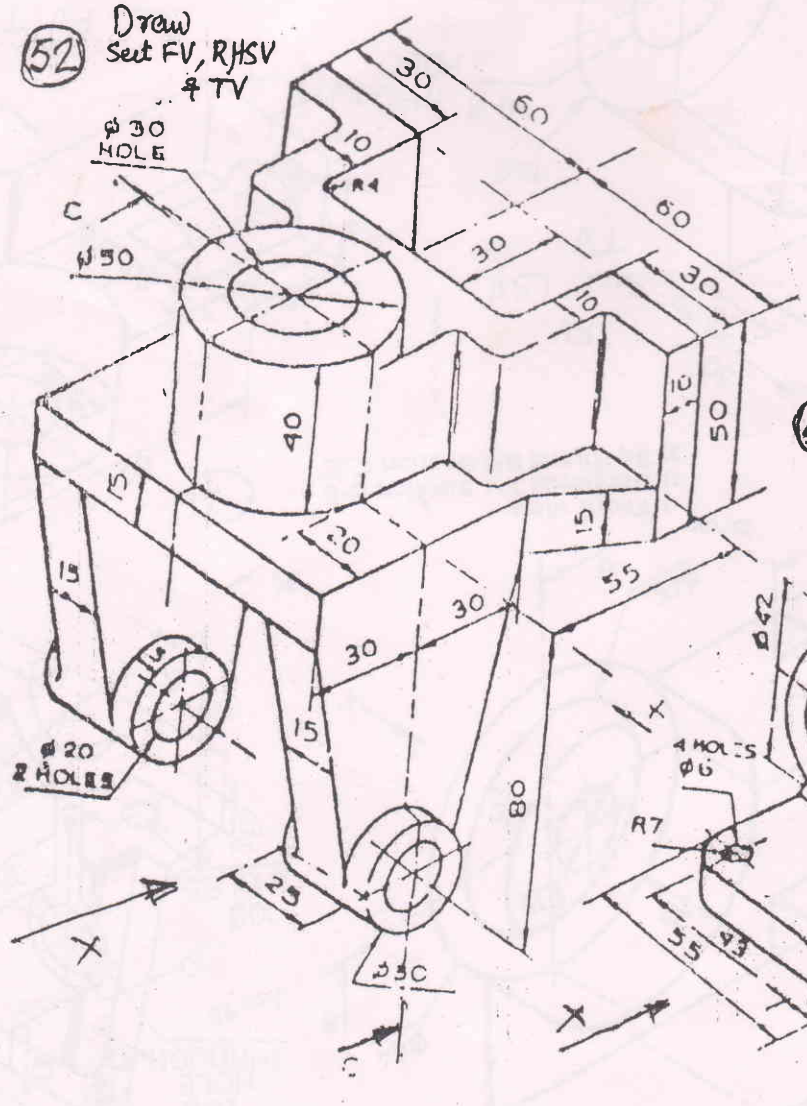

(53) Draw Sect FV, LHSV & TV

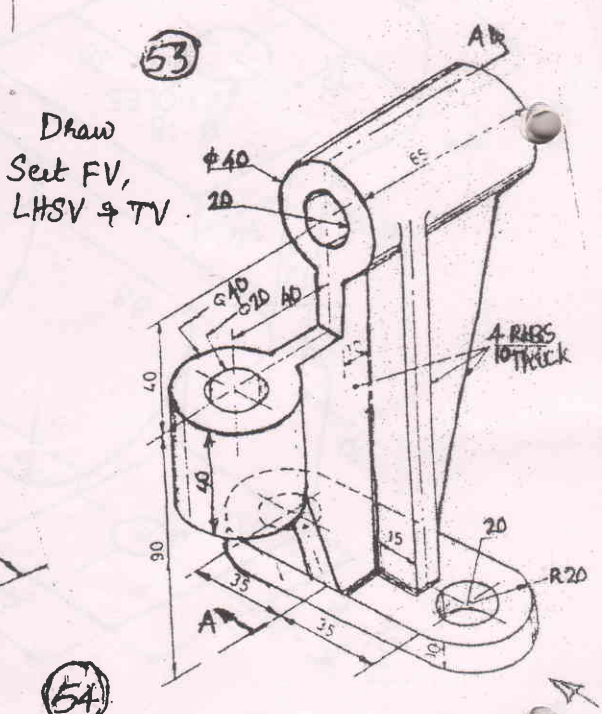

(54) Draw Sect FV, RHSV & T

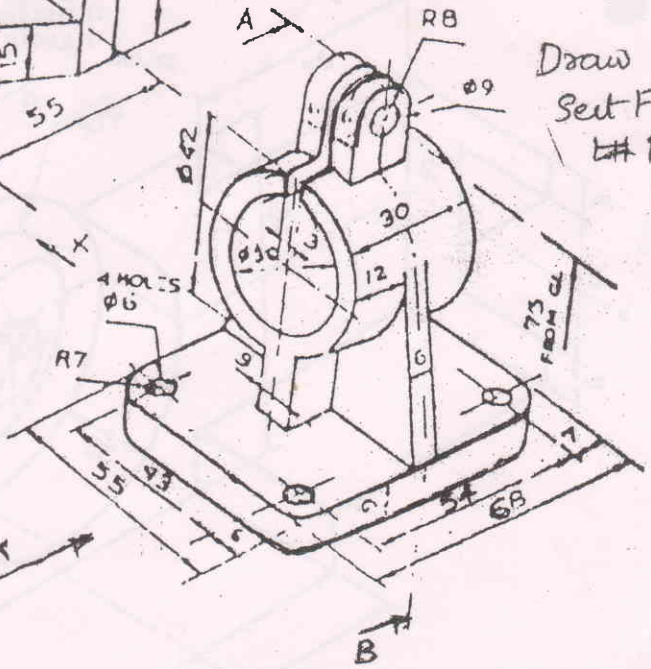

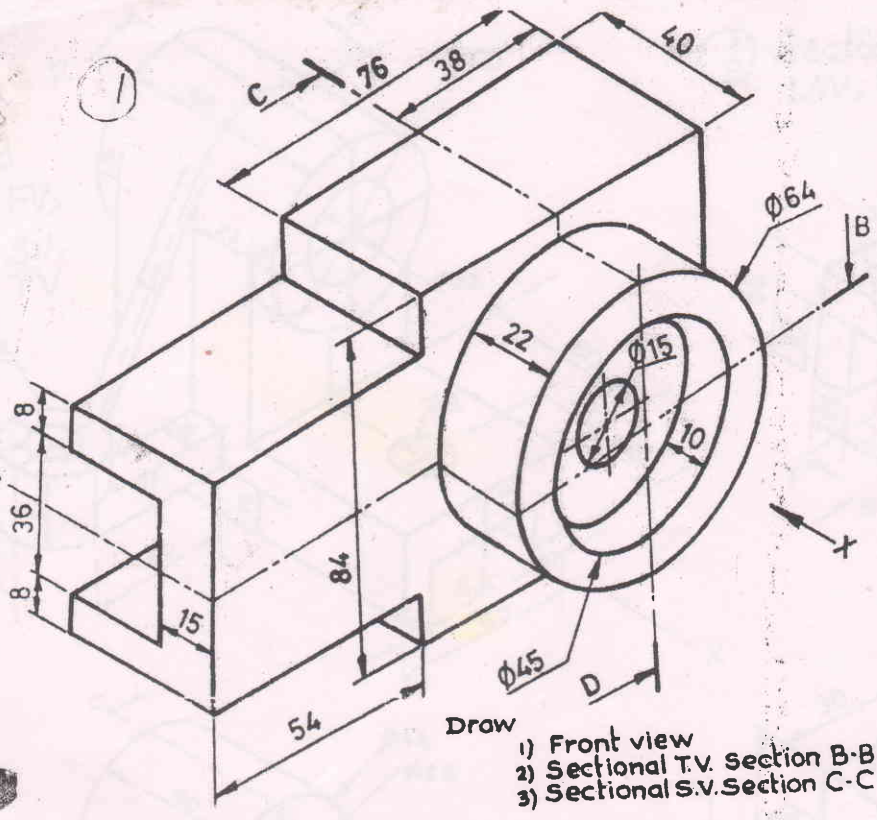

Draw
1) Front view
2) Sectional T.V. Section B-B
3) Sectional S.V. Section C-C

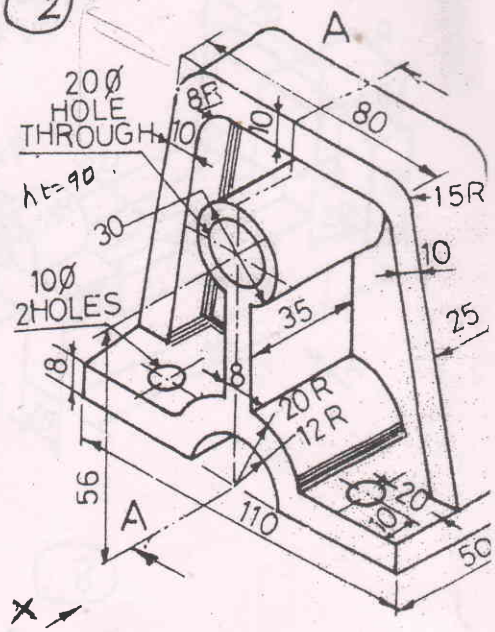

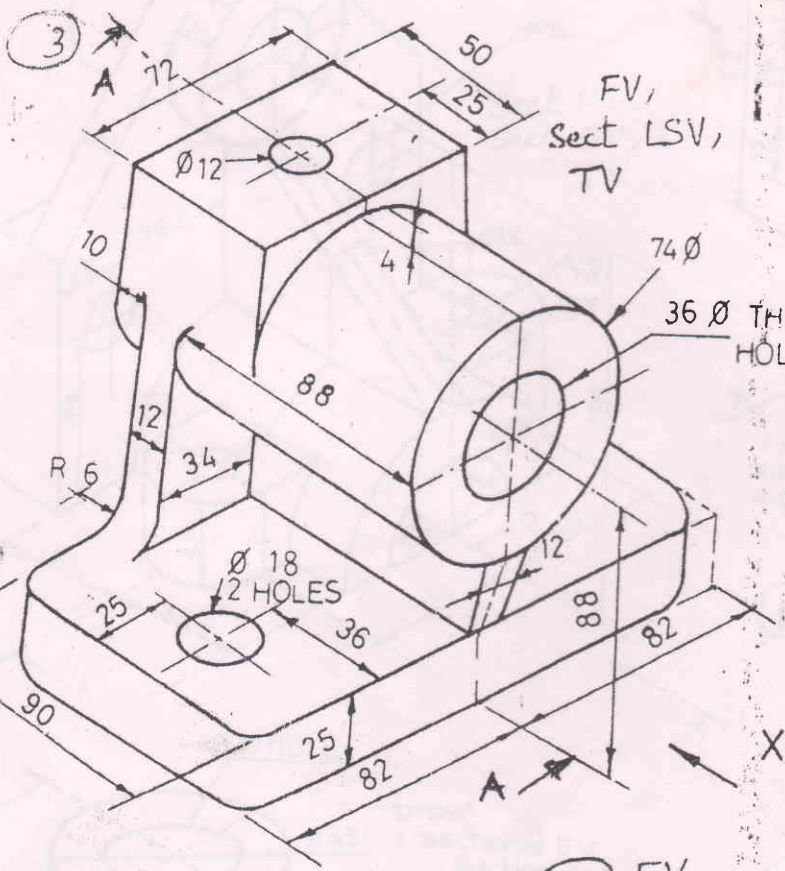

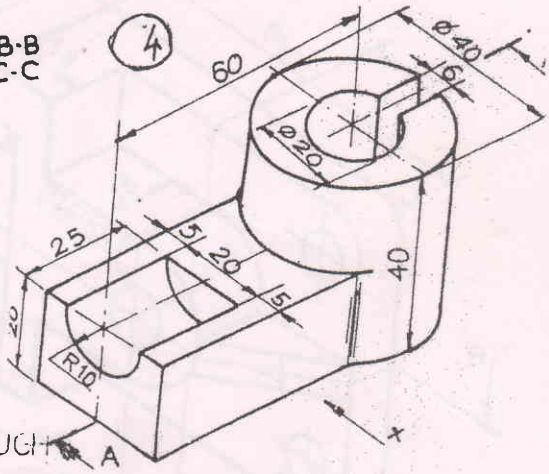

Sect. FV, TV, LSV

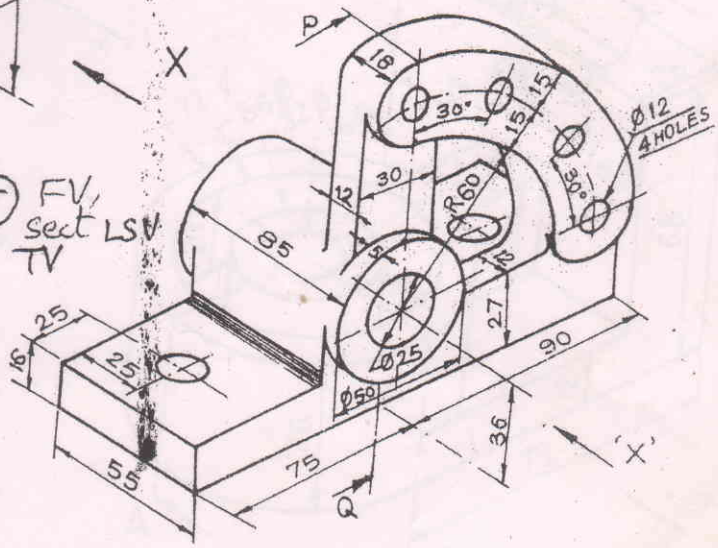

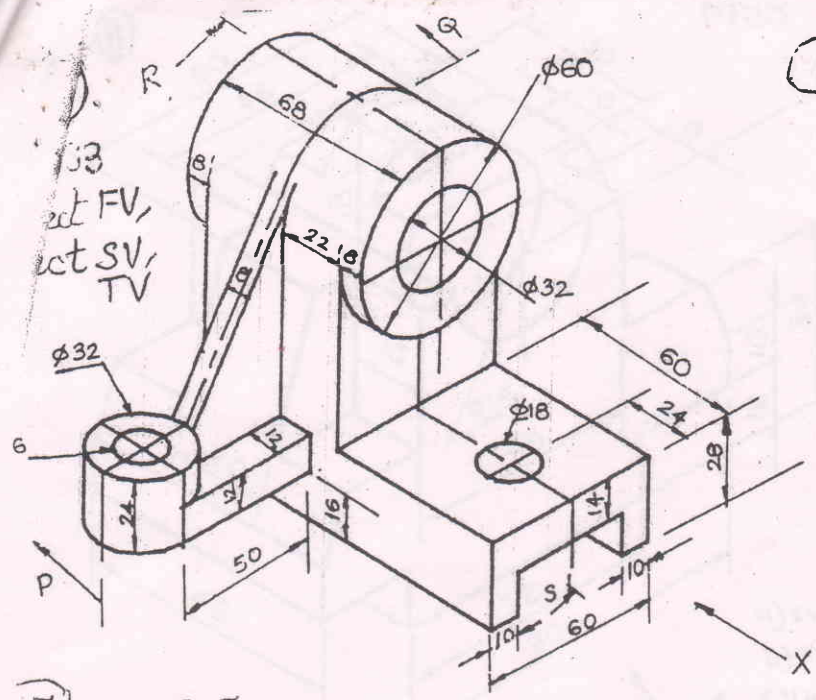

(6) Sectional FV, LSV, TV.

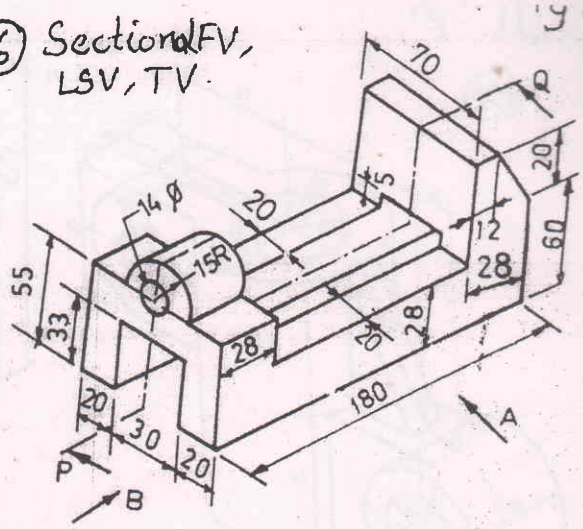

(7)

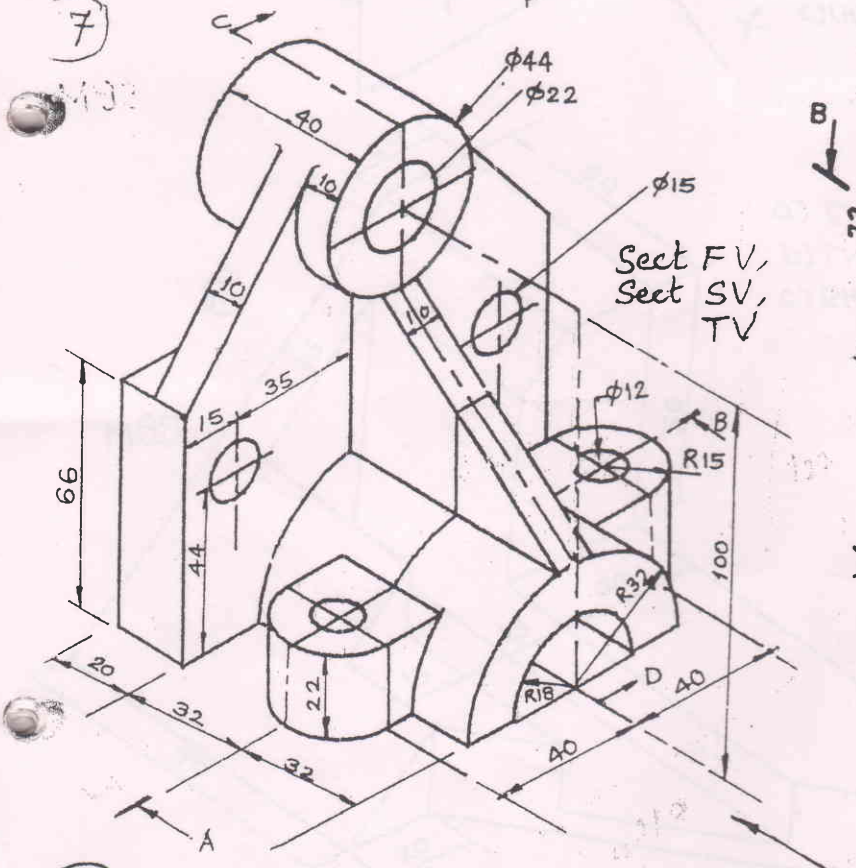

Sect FV, Sect SV, TV

(8)

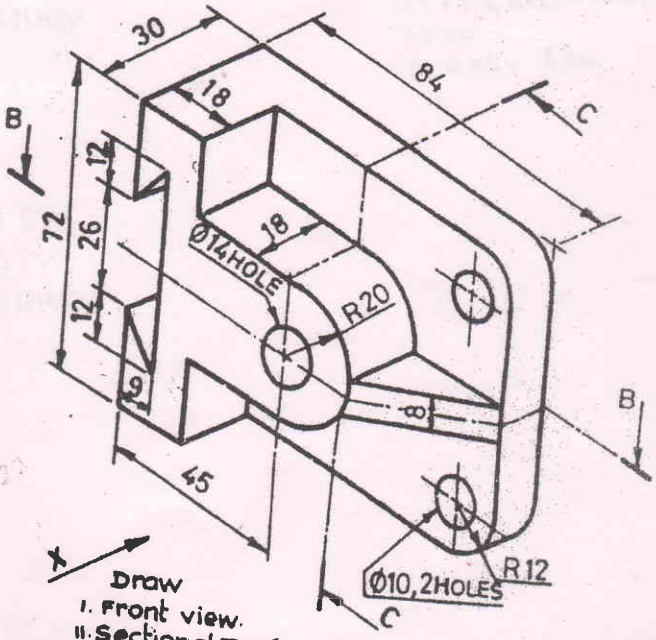

Draw
I. Front view.
II. Sectional T.V. (B-B)
III. Sectional S.V. (C-C).

(9)

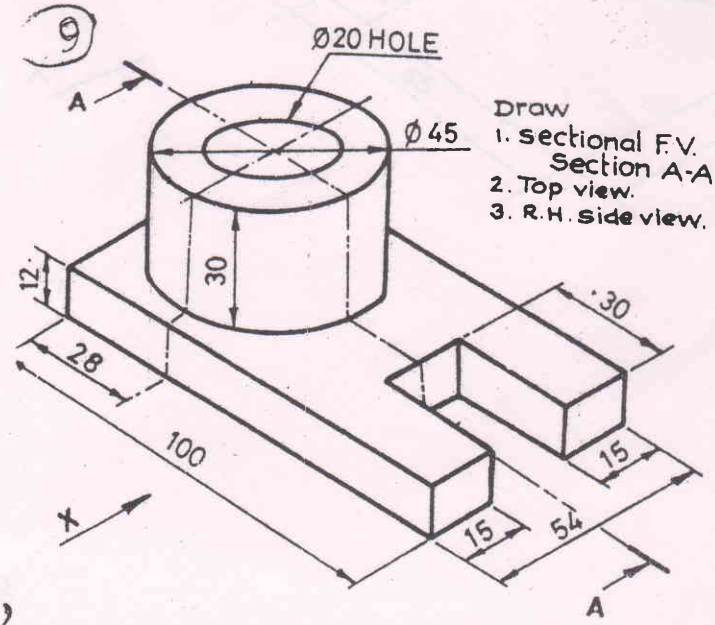

Draw
1. sectional F.V. Section A-A
2. Top view.
3. R.H. side view.

(10) Sect FV TV, LSV

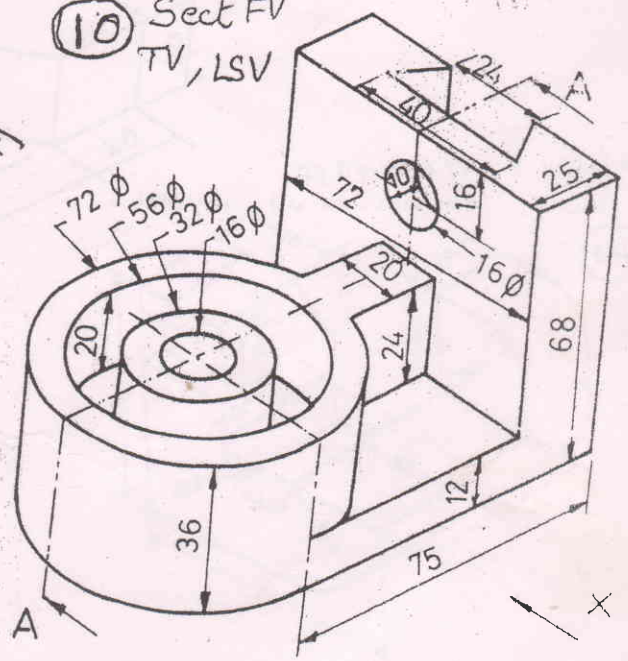

(11)

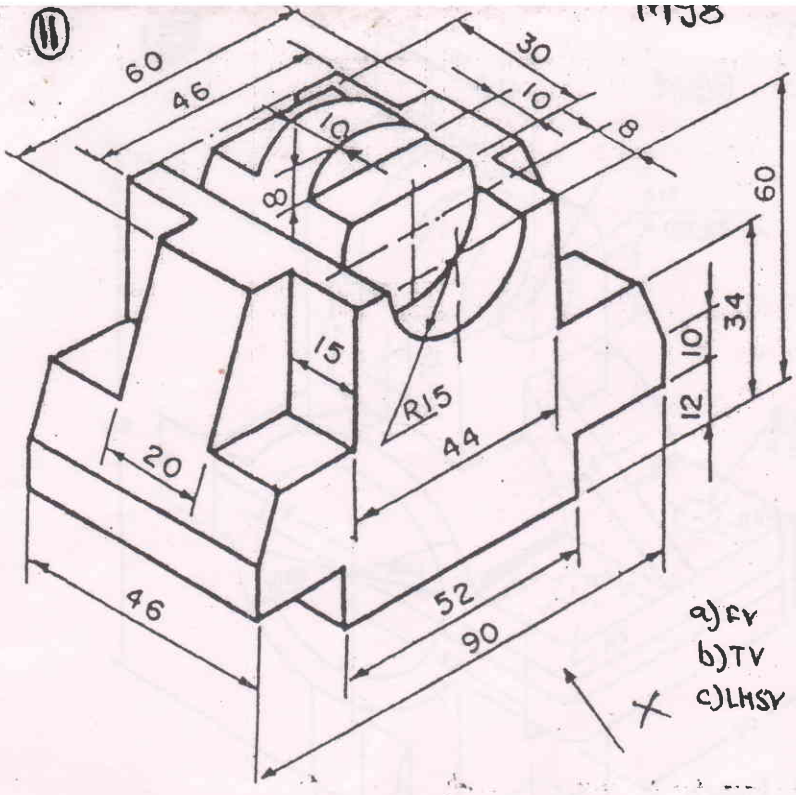

a) FV
b) TV
c) LHSV

(13)

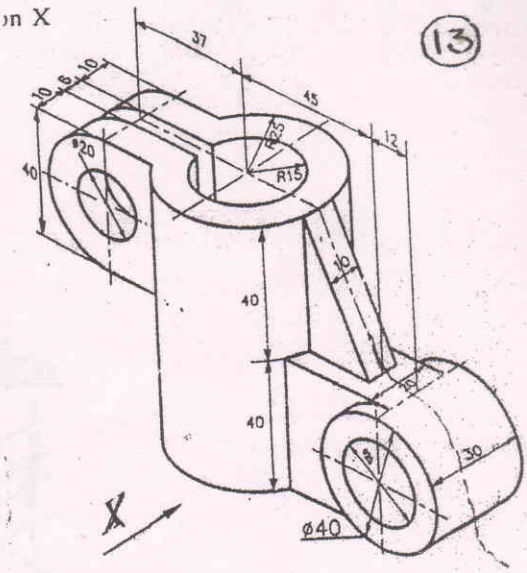

a) FV (Sectional)
b) TV
c) RHSV

(12)

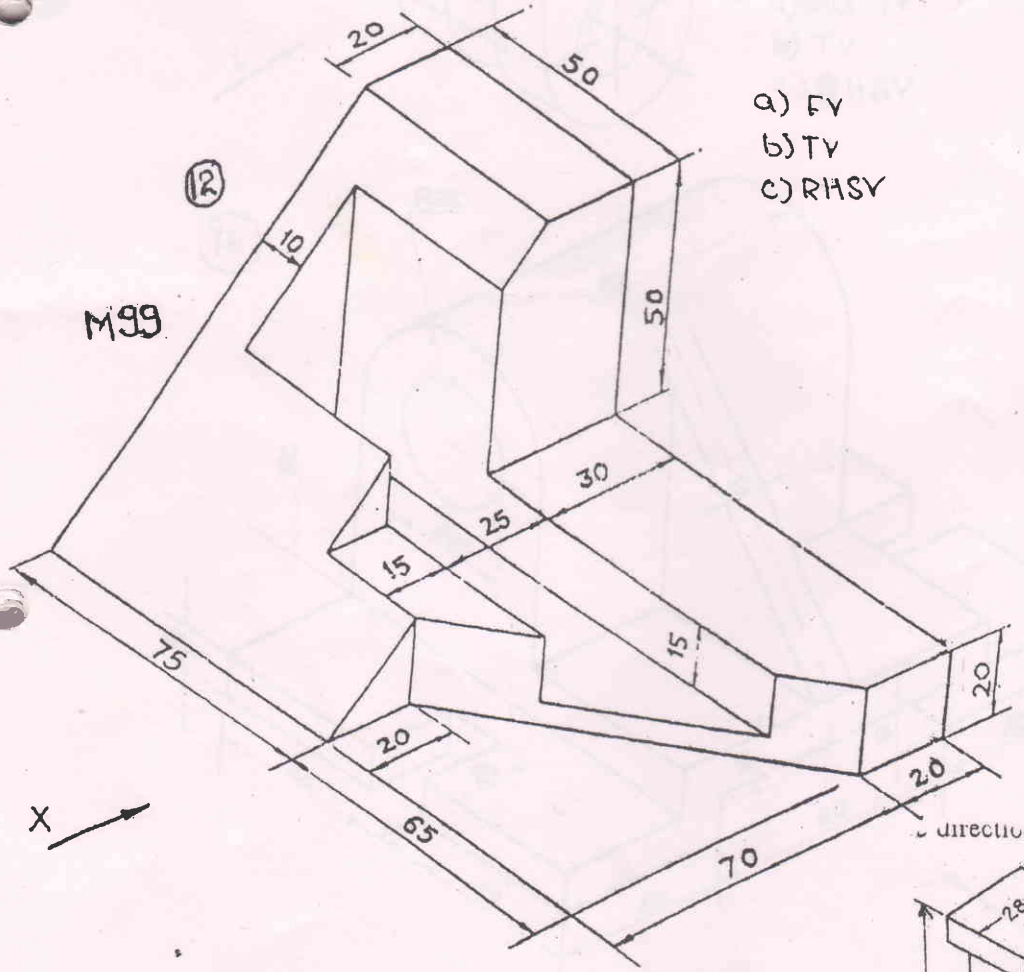

a) FV
b) TV
c) RHSV

M99

a) FV b) TV c) LHSV

direction. (ii) Left side view. (iii) Top

(14)

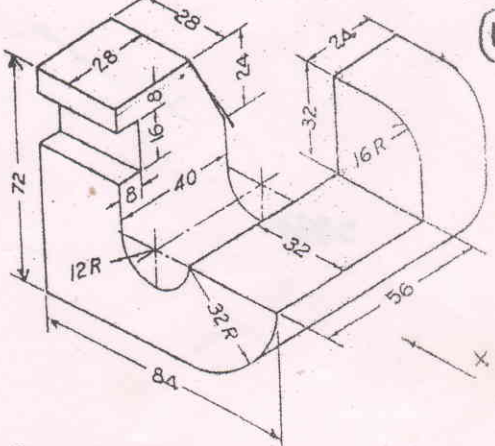

Draw the following views using first angle con

NSC

(10)

M99

(15)

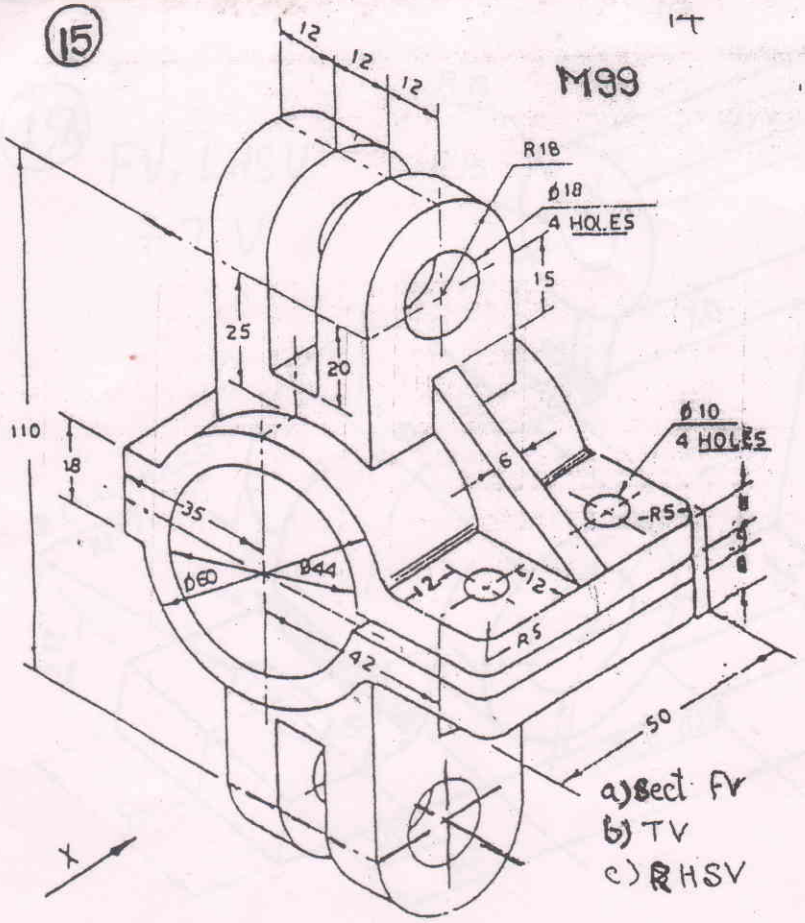

a) Sect FV
b) TV
c) RHSV

(16)

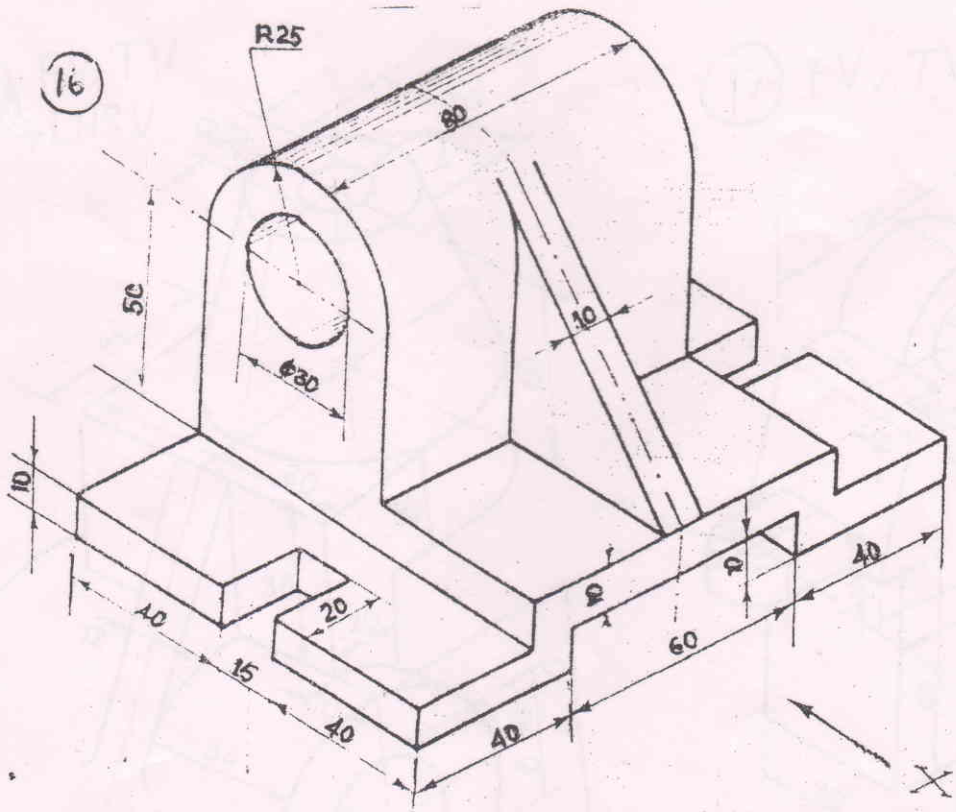

MSC

(15A) FV, LHSV & TV

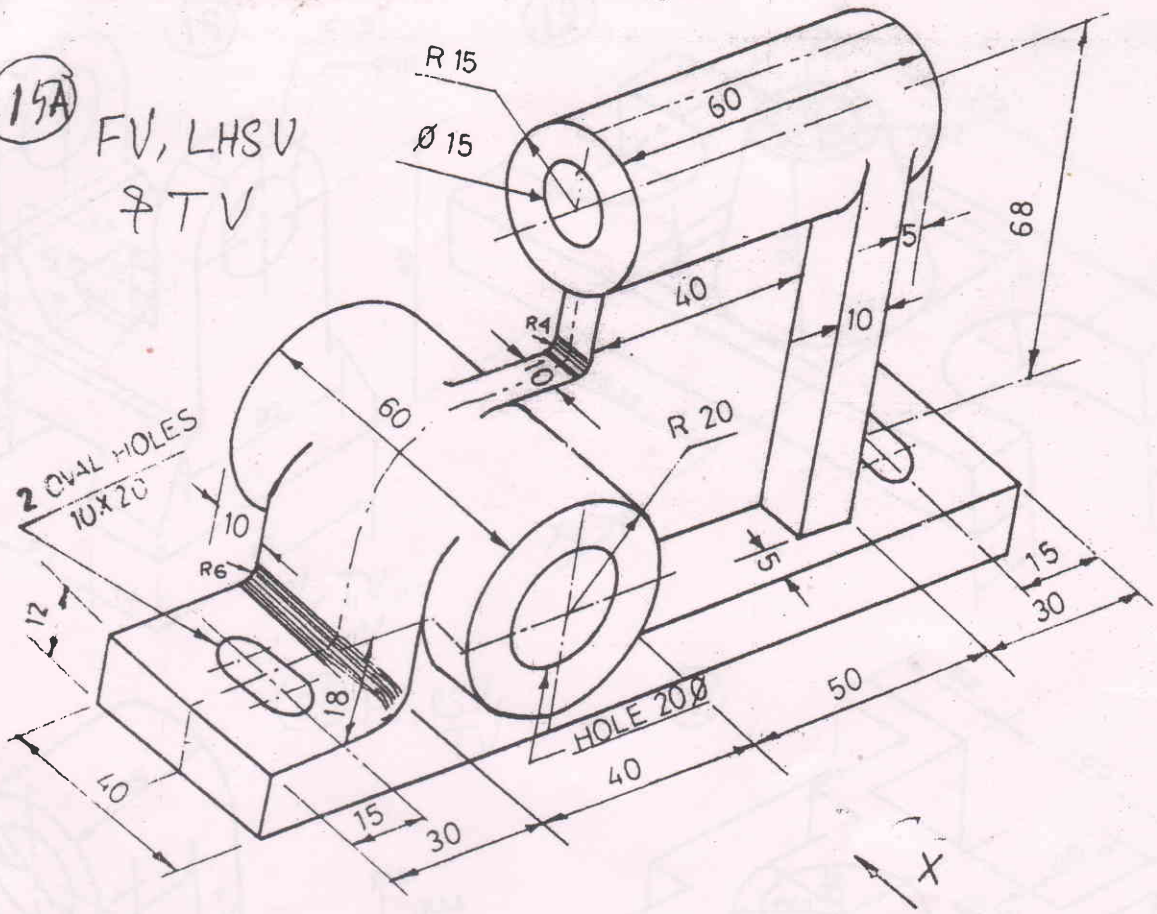

(16A) FV, TV & LHSV

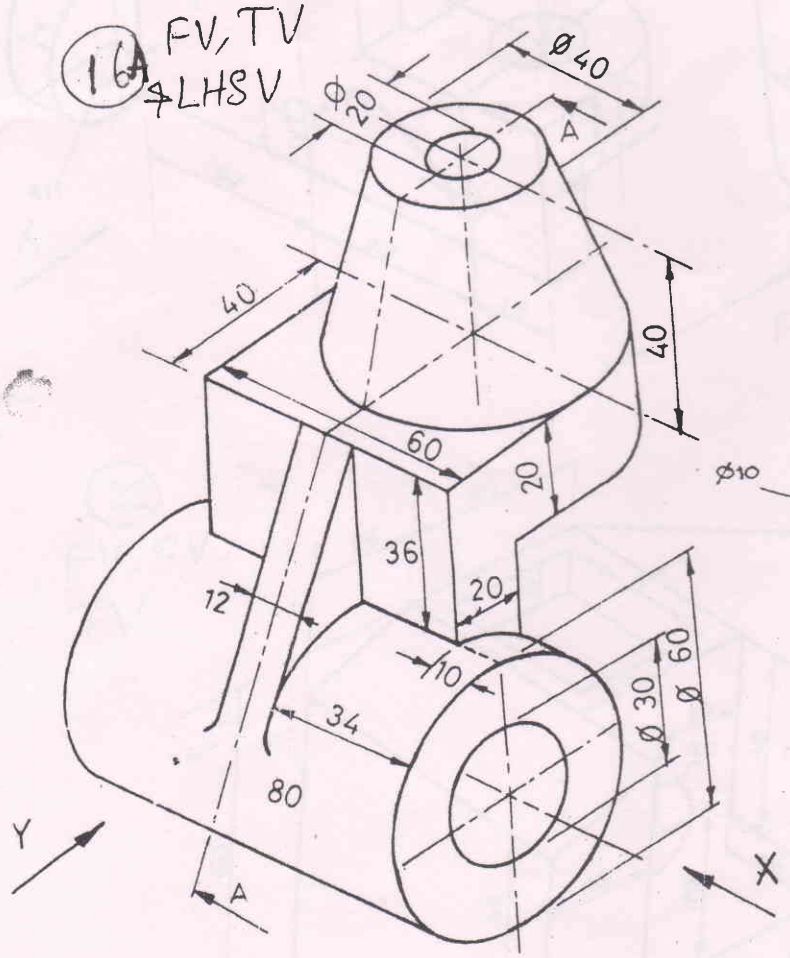

(17) FV, TV, SV

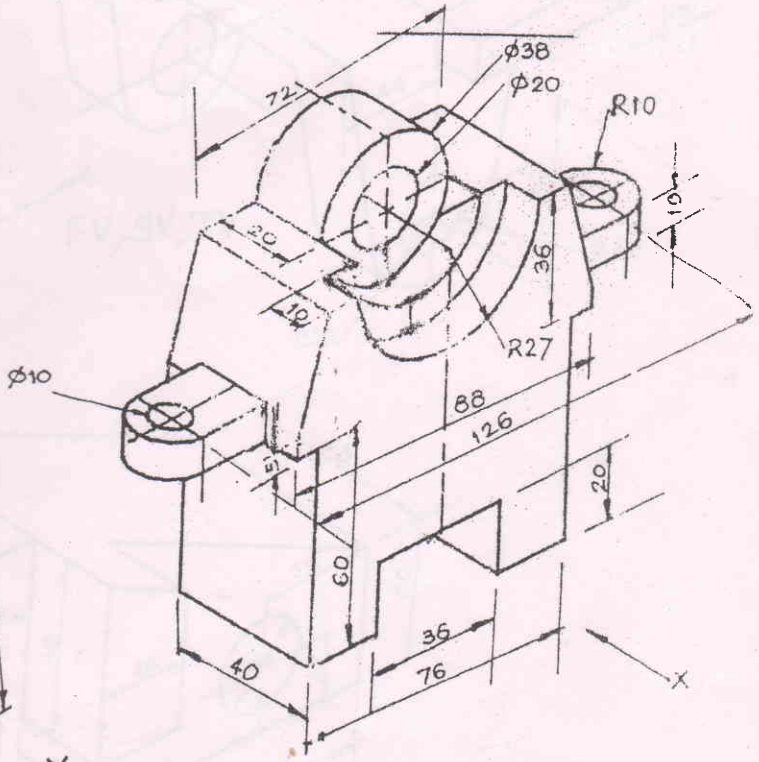

NSC

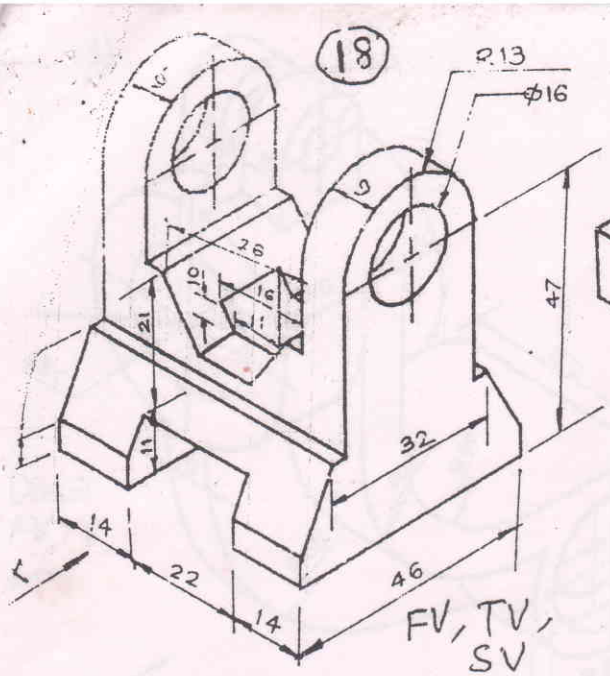
18
R13
ϕ16
47
32
14
22
14
46
FV, TV, SV

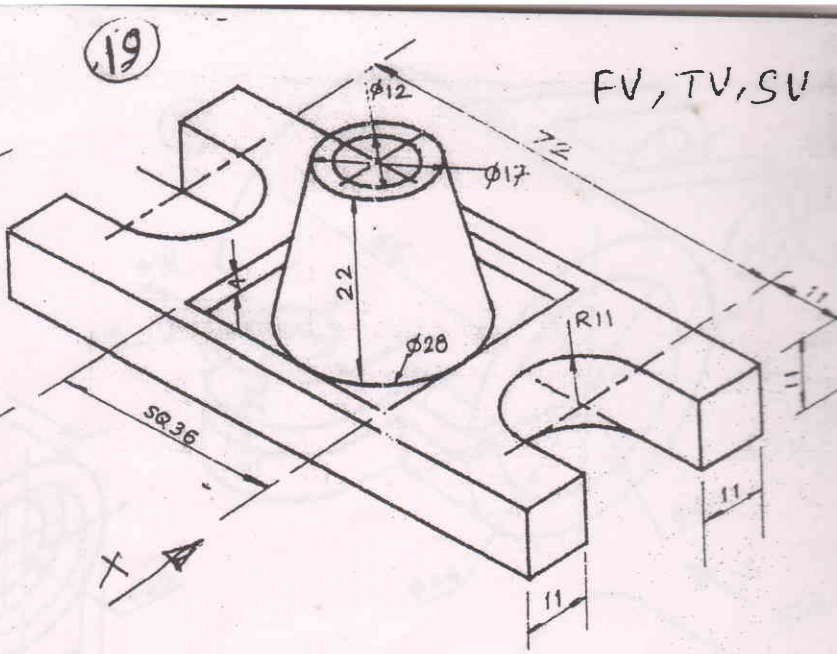
19
FV, TV, SV
ϕ12
72
ϕ17
22
4
ϕ28
R11
SR36
11
11
X

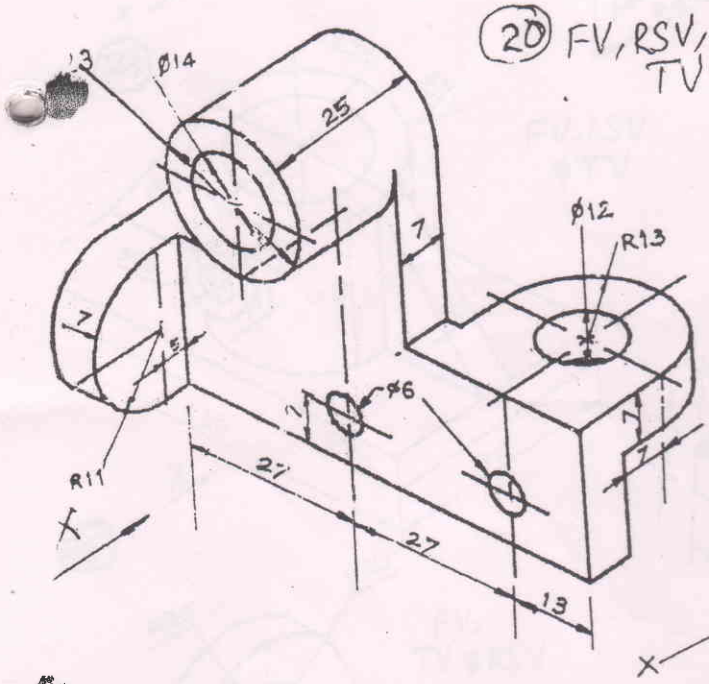
20
FV, RSV, TV
13
ϕ14
25
7
ϕ12
R13
7
5
ϕ6
R11
27
27
13
X

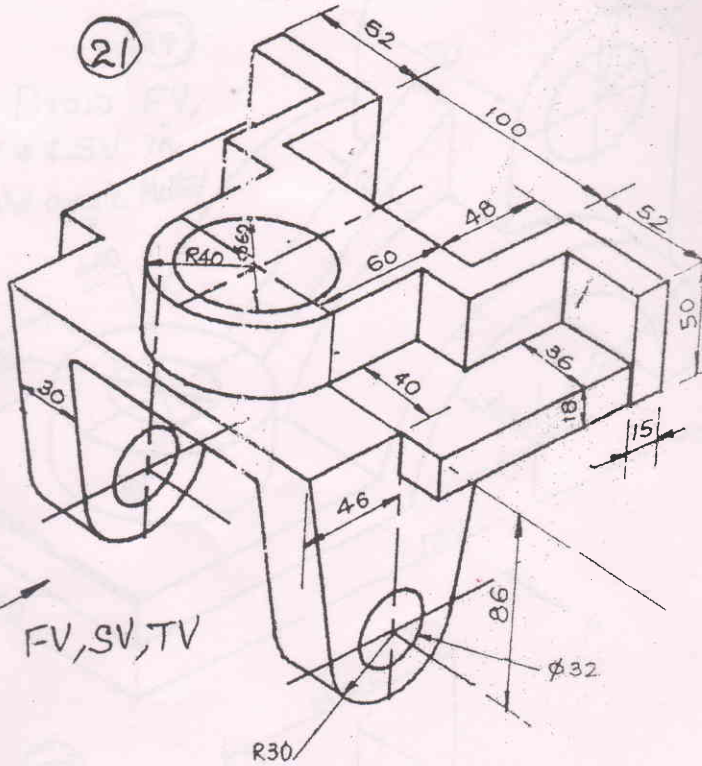
21
62
100
52
48
R40
ϕ52
60
50
36
40
18
30
15
46
86
ϕ32
R30
FV, SV, TV
X

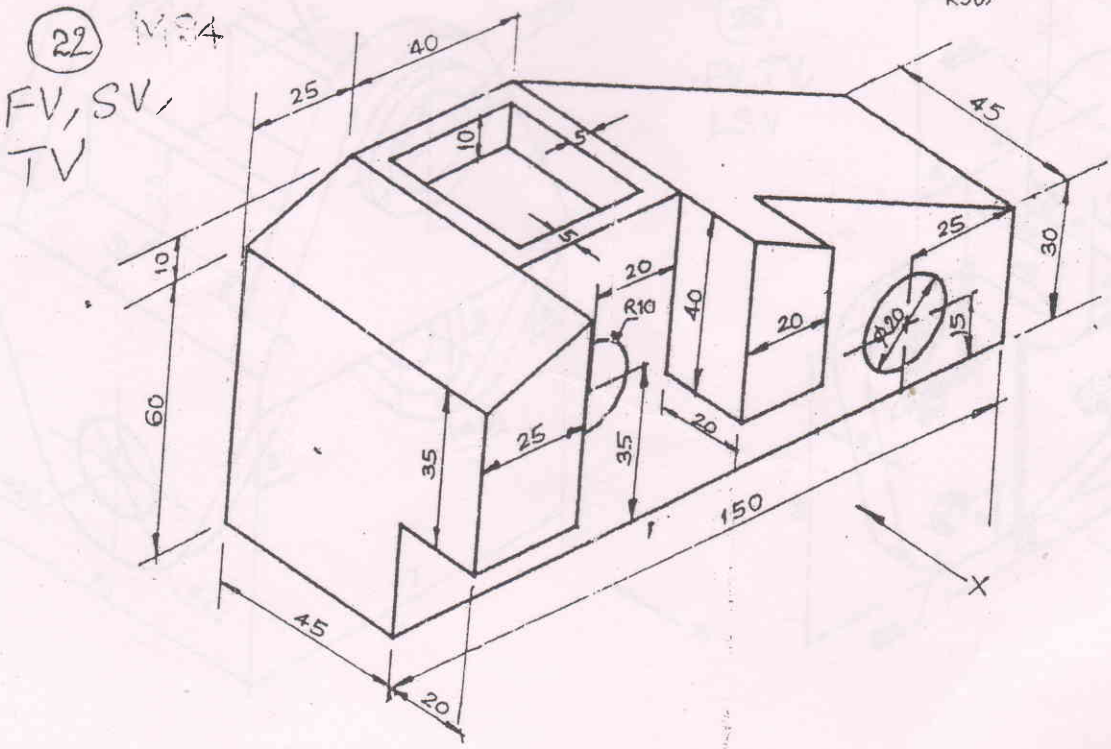
22
MS4
FV, SV, TV
40
25
45
10
5
5
10
20
R10
40
20
25
30
ϕ20
15
60
35
25
35
20
150
45
20
X

NSC

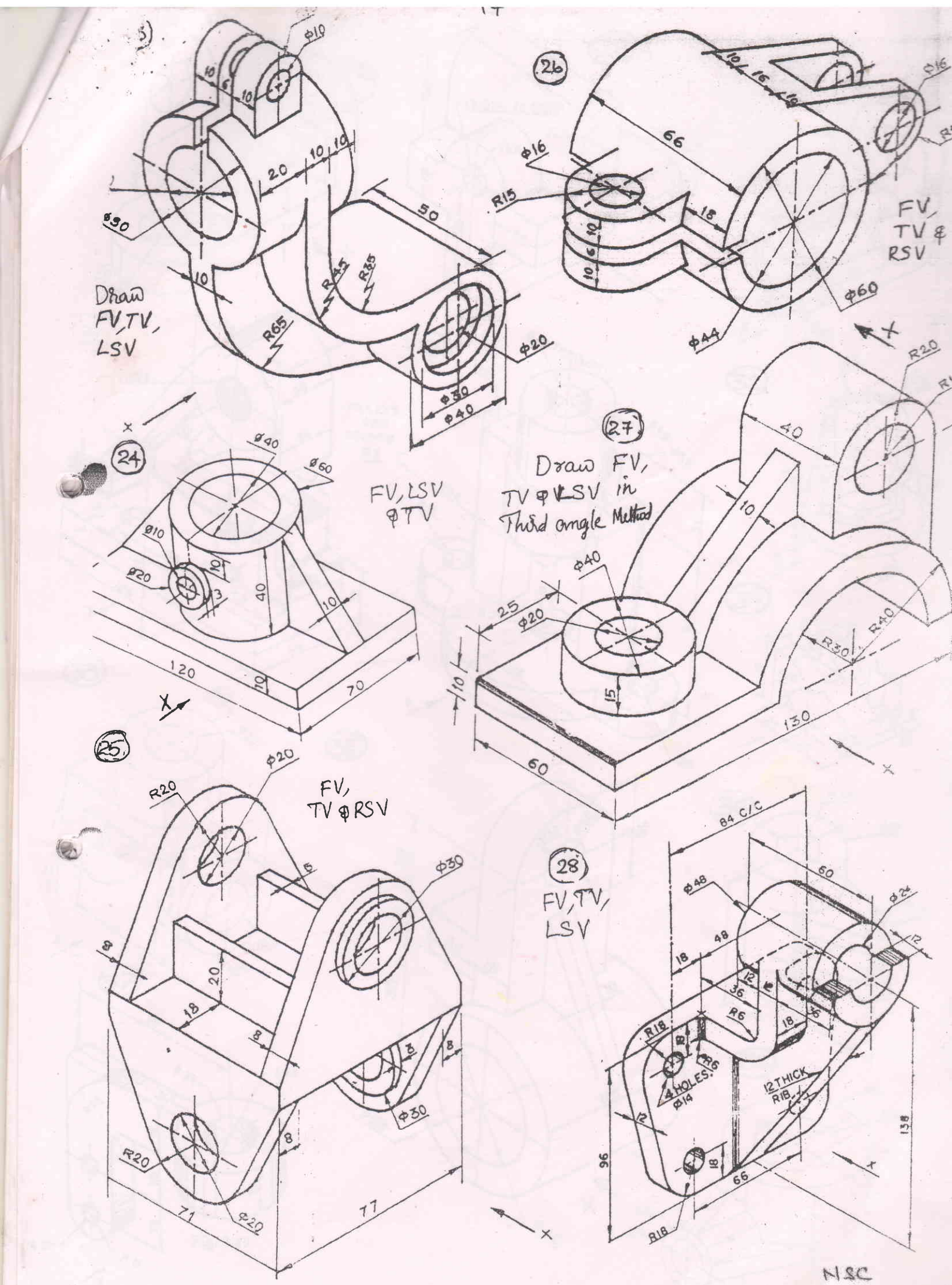

5)
Draw FV, TV, LSV
26
FV, TV & RSV
24
FV, LSV & TV
27
Draw FV, TV & LSV in Third angle Method
25
FV, TV & RSV
28
FV, TV, LSV
4 HOLES
12 THICK
NSC

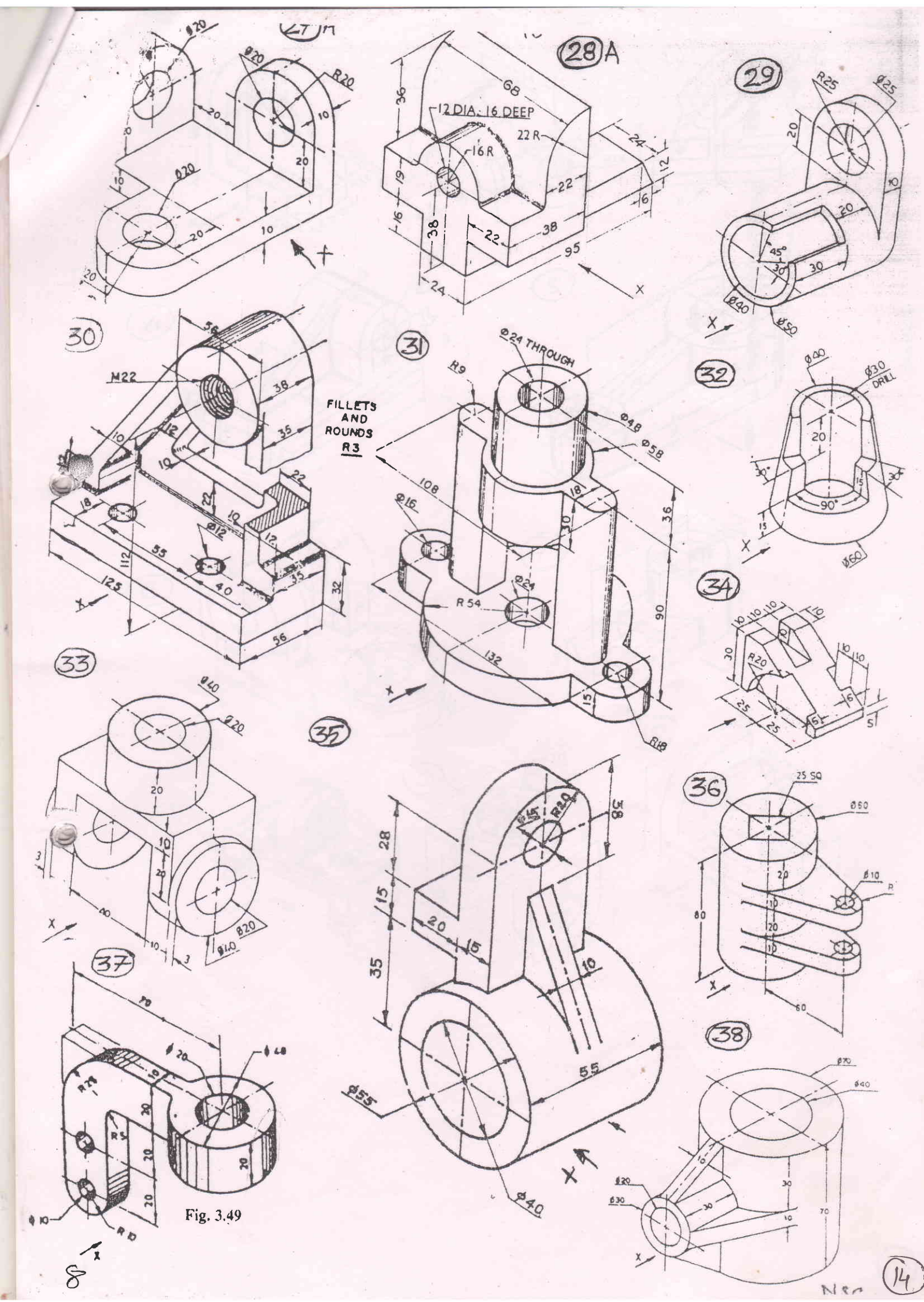
27
28A
12 DIA. 16 DEEP
16R
22R
29
30
M22
FILLETS AND ROUNDS R3
31
Ø24 THROUGH
R9
Ø48
Ø58
Ø16
R54
Ø24
R18
32
Ø30 DRILL
Ø60
34
R20
33
35
36
25 SQ
Ø60
Ø10
37
38
Ø20
Ø40
Ø55
Ø70
Ø30
Ø10
R10

Fig. 3.49

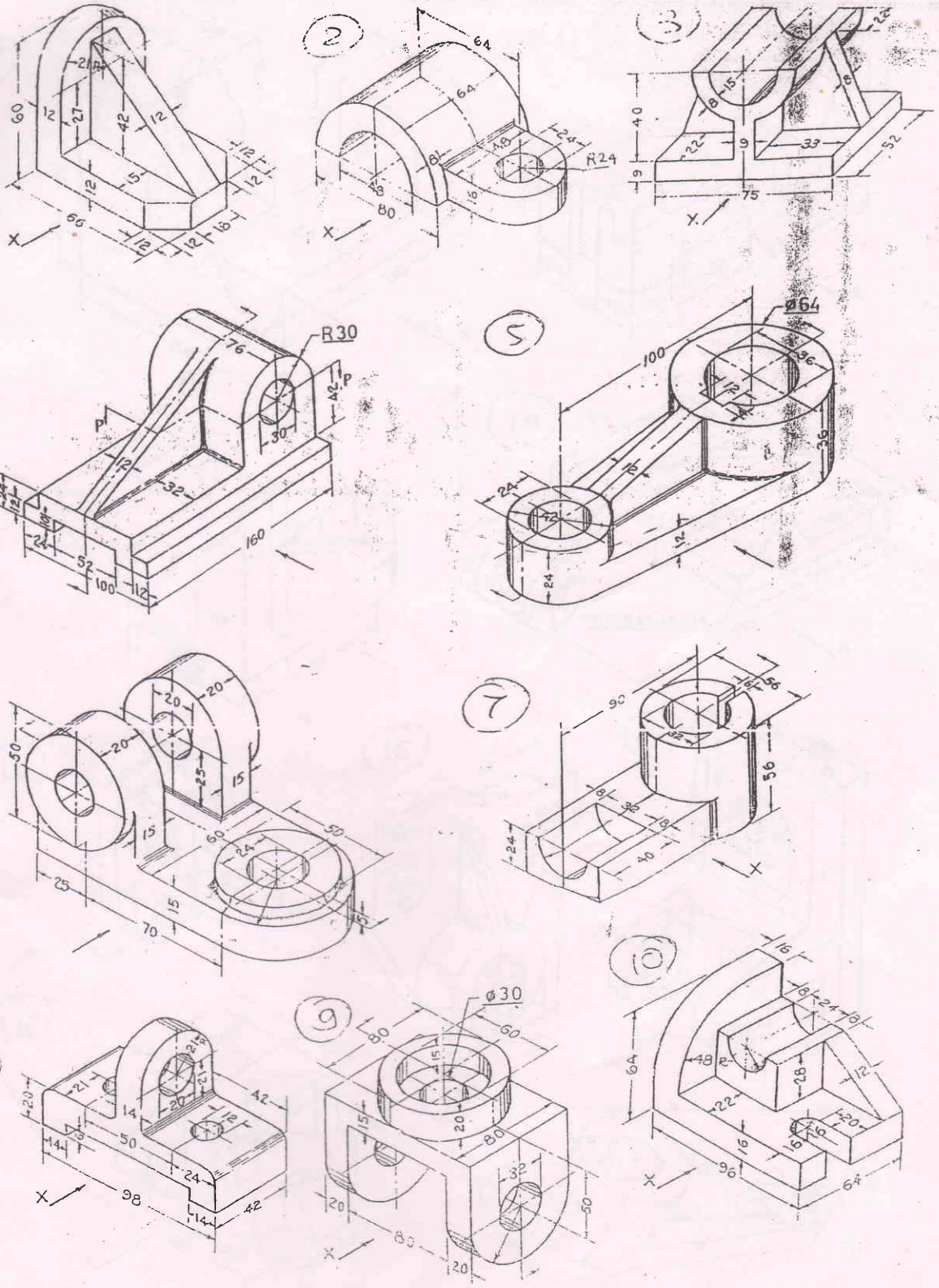
1
2
3
4
5
6
7
8
9
10
R30
R24
Ø64
Ø30

SHEET 5

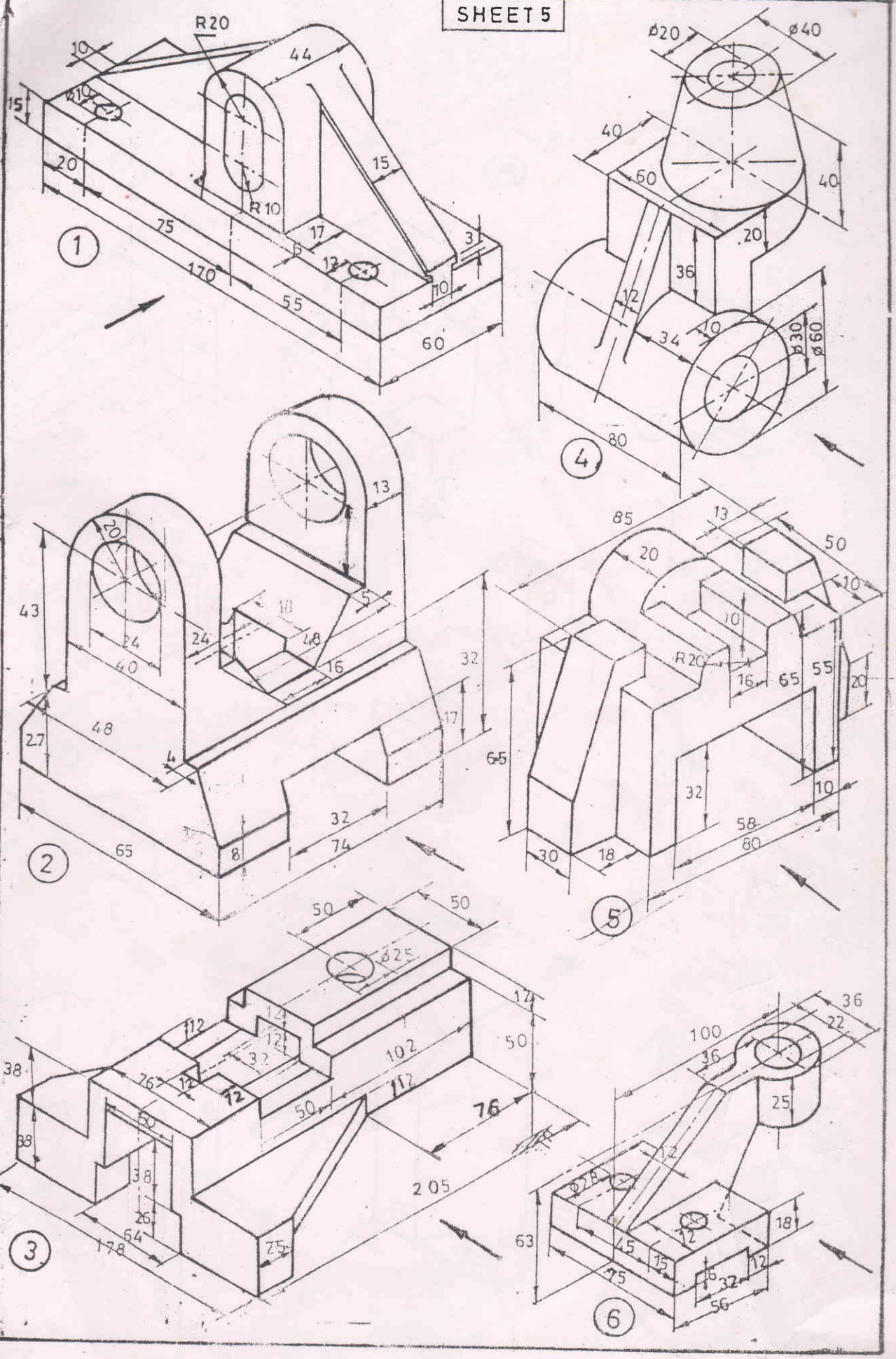
R20
10
44
15
Ø10
20
75
170
55
60
R10
17
13
3
10
1
Ø20
Ø40
40
60
40
20
36
12
34
10
Ø30
Ø60
80
4
13
20
43
24
24
40
48
18
5
16
32
17
27
48
4
32
74
65
8
2
85
13
50
20
10
10
R20
16
65
55
20
65
32
10
58
80
30
18
5
50
50
Ø25
12
12
12
12
32
102
112
50
38
76
12
12
50
76
38
38
26
64
178
205
25
3
36
22
100
36
25
12
Ø28
18
63
45
15
12
16
32
56
75
6

N&C

12