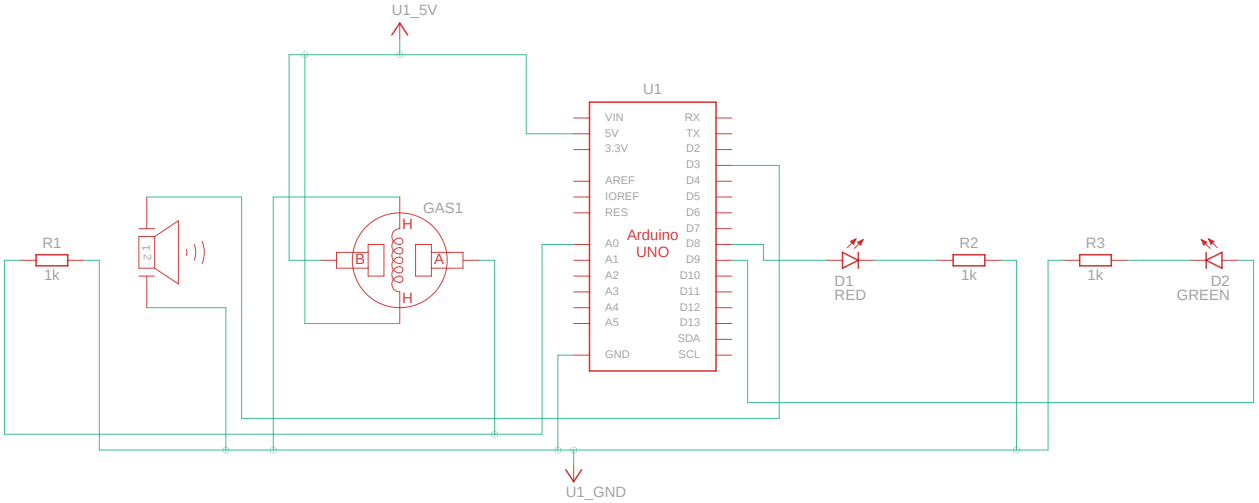

Made with Tinkercad®

Title: Smoke Detector	
Date: 4/24/2024, 1:13:18 AM	Sheet: 1/1