Mechanical Characteristics

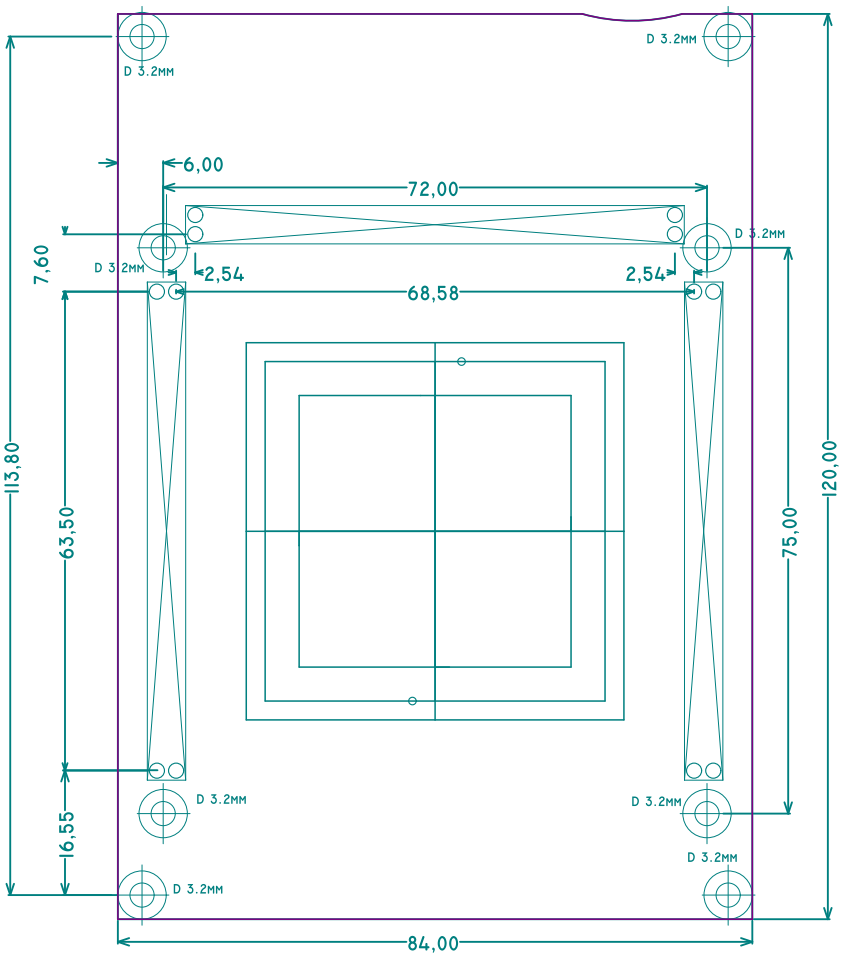

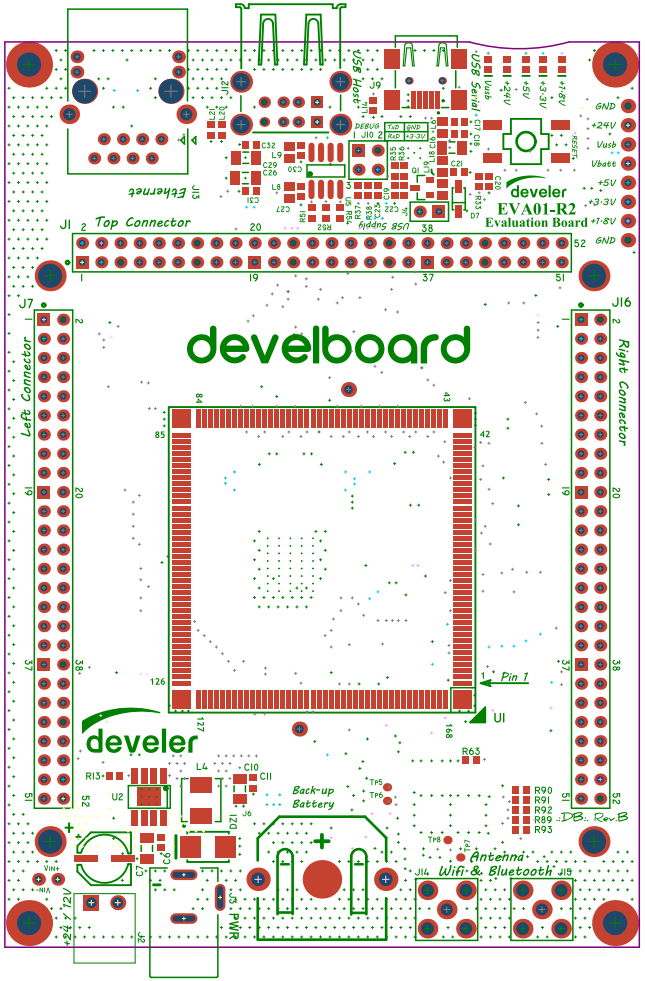
develboard
develer
EVA01-R2
Evaluation Board
Top Connector
Left Connector
Right Connector
Ethernet
USB Phone
USB Serial
USB Supply
Back-up Battery
Antenna
Wifi & Bluetooth
Pin 1
DB. Rev B
GND
+24V
Vusb
Vbatt
+5V
+3.3V
+1.8V
+7.8V
J1
J7
J16
J15
J19
U1
U2
L4
R63
R90
R91
R92
R89
R93
R13
C10
C11
C12
C13
C14
C15
C16
C17
C18
C19
C20
C21
C22
C23
C24
C25
C26
C27
C28
C29
C30
C31
C32
L5
L6
L7
L8
L9
L10
L11
L12
L13
L14
L15
L16
L17
L18
L19
L20
L21
L22
L23
L24
L25
L26
L27
L28
L29
L30
L31
L32
L33
L34
L35
L36
L37
L38
L39
L40
L41
L42
L43
L44

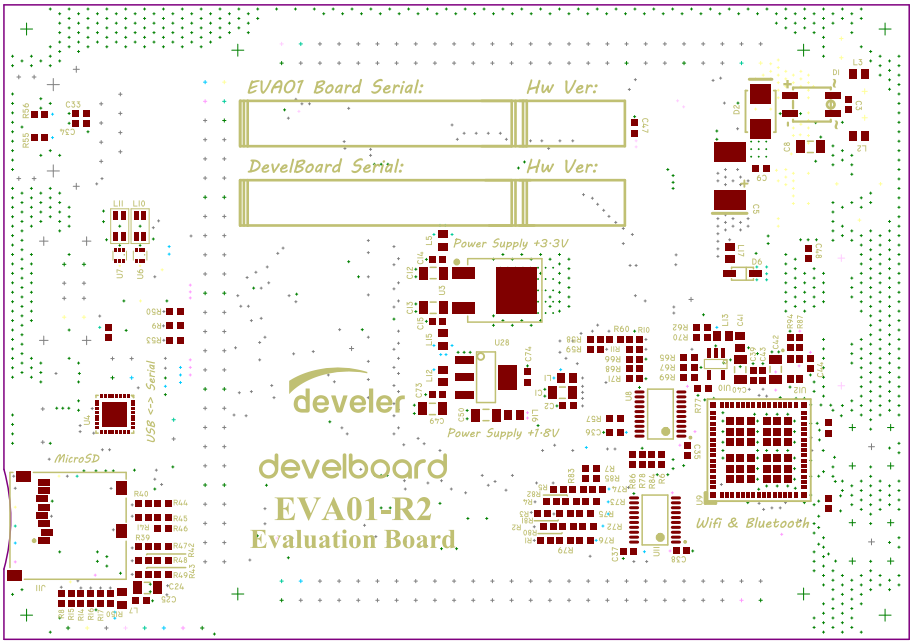
EVA01 Board Serial:
Hw Ver:
DevelBoard Serial:
Hw Ver:
Power Supply +3.3V
Power Supply +1.8V
USB <-> Serial
MicroSD
Wifi & Bluetooth
develer
develboard
EVA01-R2
Evaluation Board

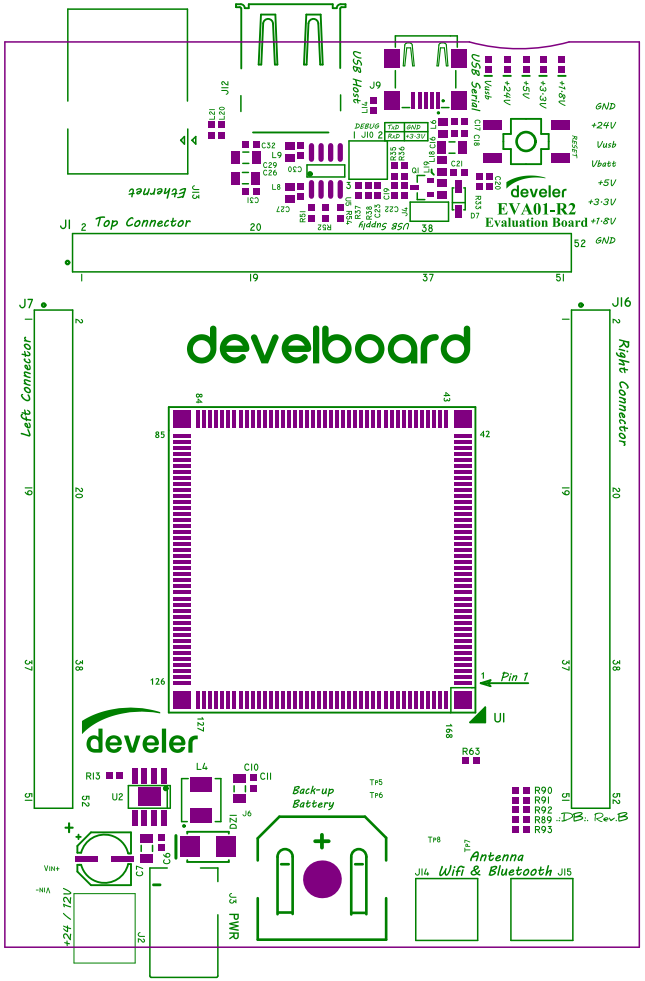
develboard
develer
EVA01-R2
Evaluation Board
Top Connector
Left Connector
Right Connector
Ethernet
USB Host
USB Serial
USB Supply
DEBUG
RxD
TxD
GND
+3.3V
GND
+24V
Vusb
Vbatt
+5V
+3.3V
+1.8V
+7.8V
GND
RESET
Pin 1
U1
Back-up Battery
Antenna
Wifi & Bluetooth
+24 / 12V
+VIN
VIN-
PWR
DB. Rev B

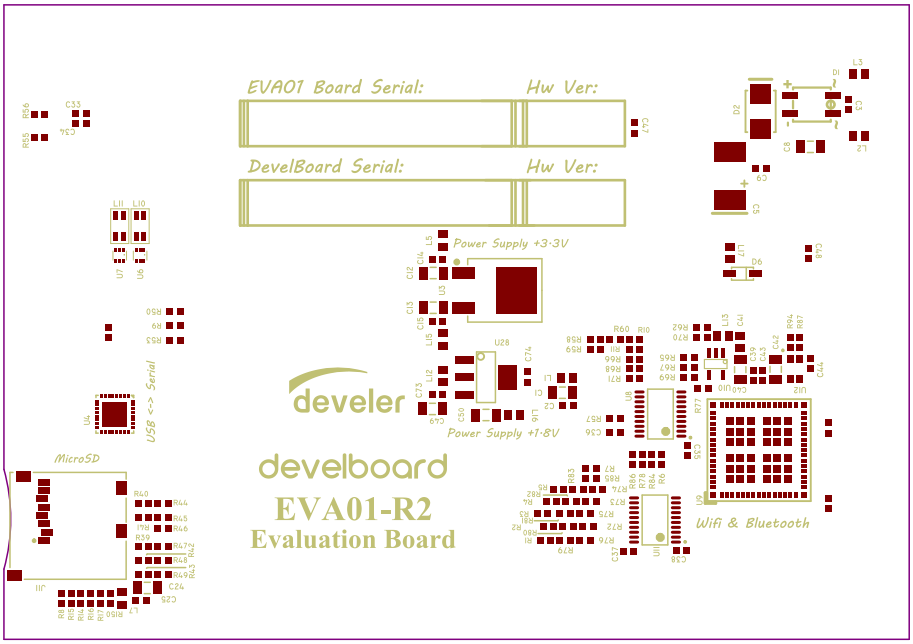
EVA01 Board Serial:
Hw Ver:
DevelBoard Serial:
Hw Ver:
Power Supply +3.3V
Power Supply +1.8V
develer
develboard
EVA01-R2
Evaluation Board
MicroSD
USB <-> Serial
Wifi & Bluetooth