Mechanical Characteristics

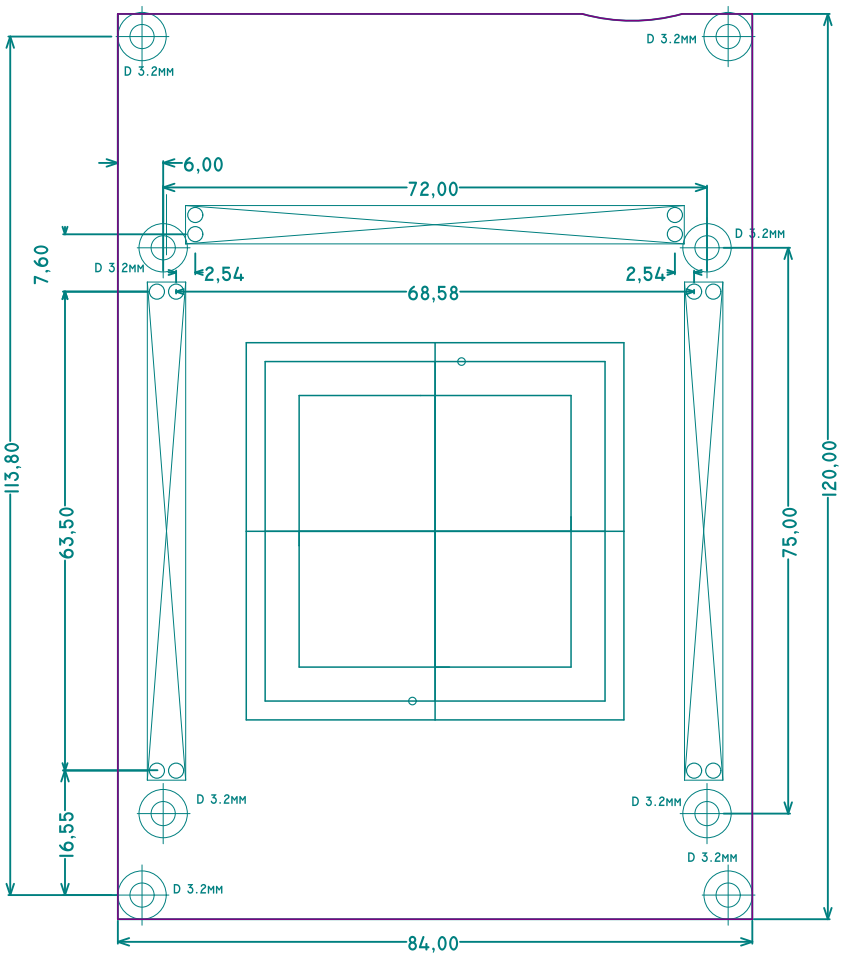

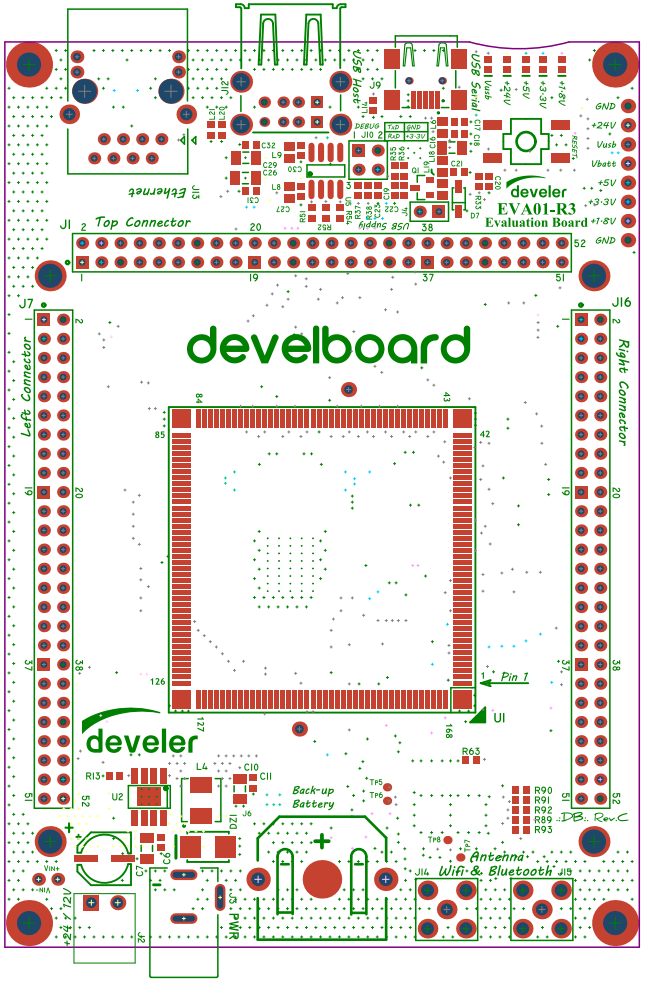
develeer
EVA01-R3
Evaluation Board
Top Connector
Left Connector
Right Connector
develboard
develer
Back-up Battery
Antenna
Wifi & Bluetooth
Pin 1
DB. Rev.C
USB Phone
USB Serial
Ethernet
USB Supply
PWR
GND
+24V
Vusb
Vbatt
+5V
+3.3V
+1.8V
+7.8V
RESET
DEBUG
TxD
RxD
+3.3V
J1
J7
J16
J15
J10
J9
J12
J13
J14
J18
J19
U1
U2
L4
R63
R90
R91
R92
R89
R93
R13
C10
C11
C9
C20
C21
C26
C27
C32
L9
L8
D7
D8
D9
D10
D11
D12
D13
D14
D15
D16
D17
D18
D19
D20
D21
D22
D23
D24
D25
D26
D27
D28
D29
D30
D31
D32
D33
D34
D35
D36
D37
D38
D39
D40
D41
D42
D43
D44
D45
D46

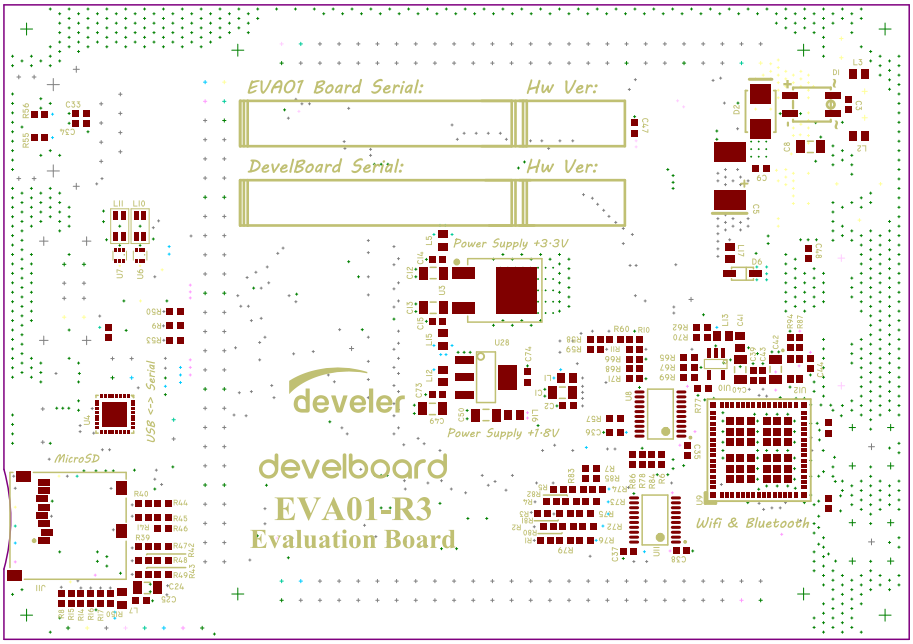
EVA01 Board Serial:
Hw Ver:
DevelBoard Serial:
Hw Ver:
Power Supply +3.3V
Power Supply +1.8V
USB <-> Serial
MicroSD
Wifi & Bluetooth
develer
develboard
EVA01-R3
Evaluation Board

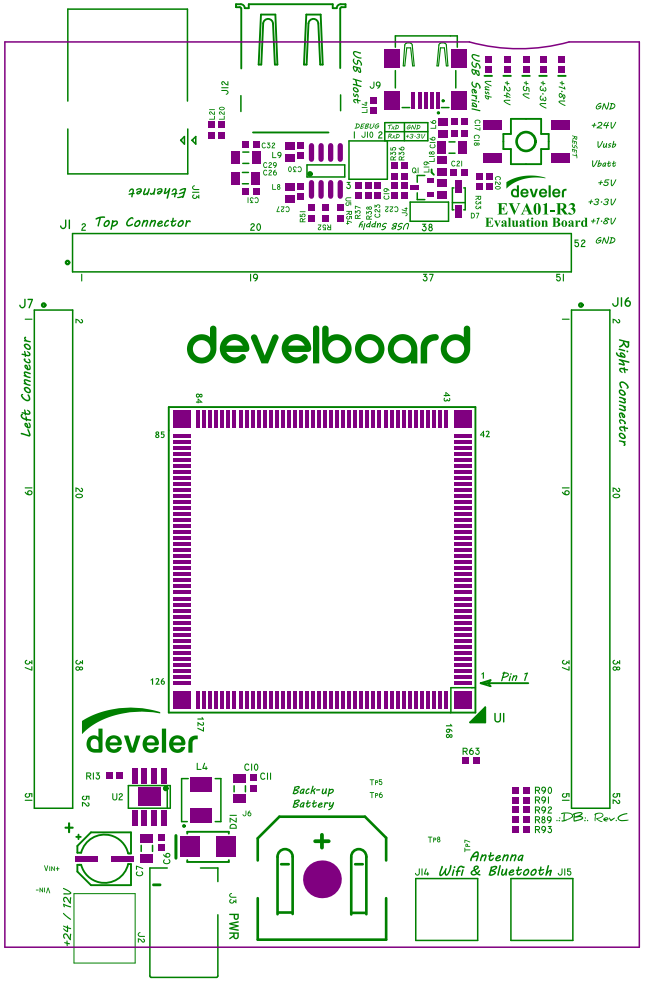
develboard
develer
EVA01-R3
Evaluation Board
Top Connector
Left Connector
Right Connector
Ethernet
USB Host
USB Serial
USB Supply
DEBUG
RxD
TxD
GND
+3.3V
GND
+24V
Vusb
Vbatt
+5V
+3.3V
+1.8V
+8V
RESET
Pin 1
U1
Back-up Battery
Antenna
Wifi & Bluetooth
+24 / 12V
VIN+
VIN-
PWR
DB. Rev.C

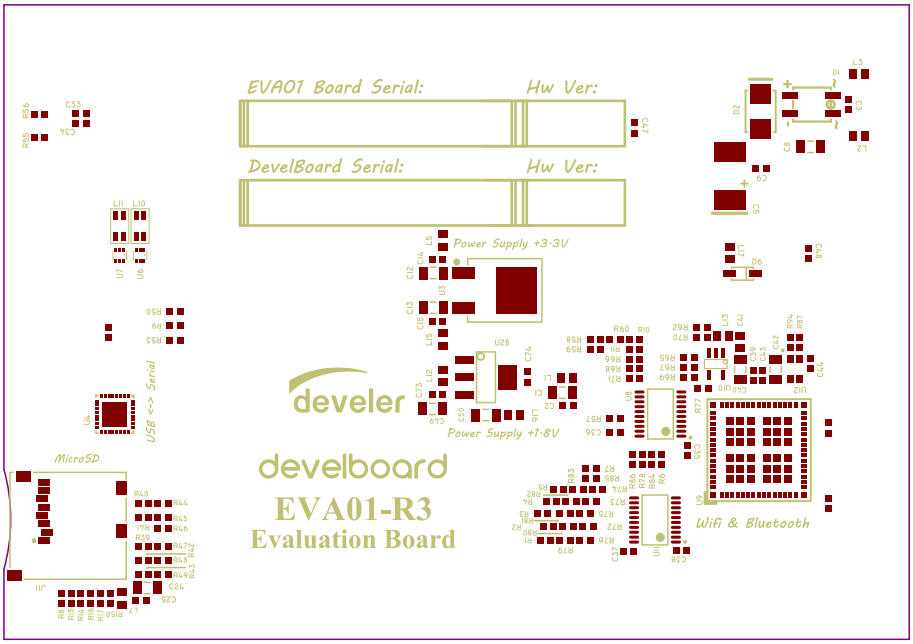
EVA01 Board Serial:
Hw Ver:
DevelBoard Serial:
Hw Ver:
Power Supply +3.3V
Power Supply +1.8V
develer
develboard
EVA01-R3
Evaluation Board
USB <-> Serial
MicroSD
Wifi & Bluetooth