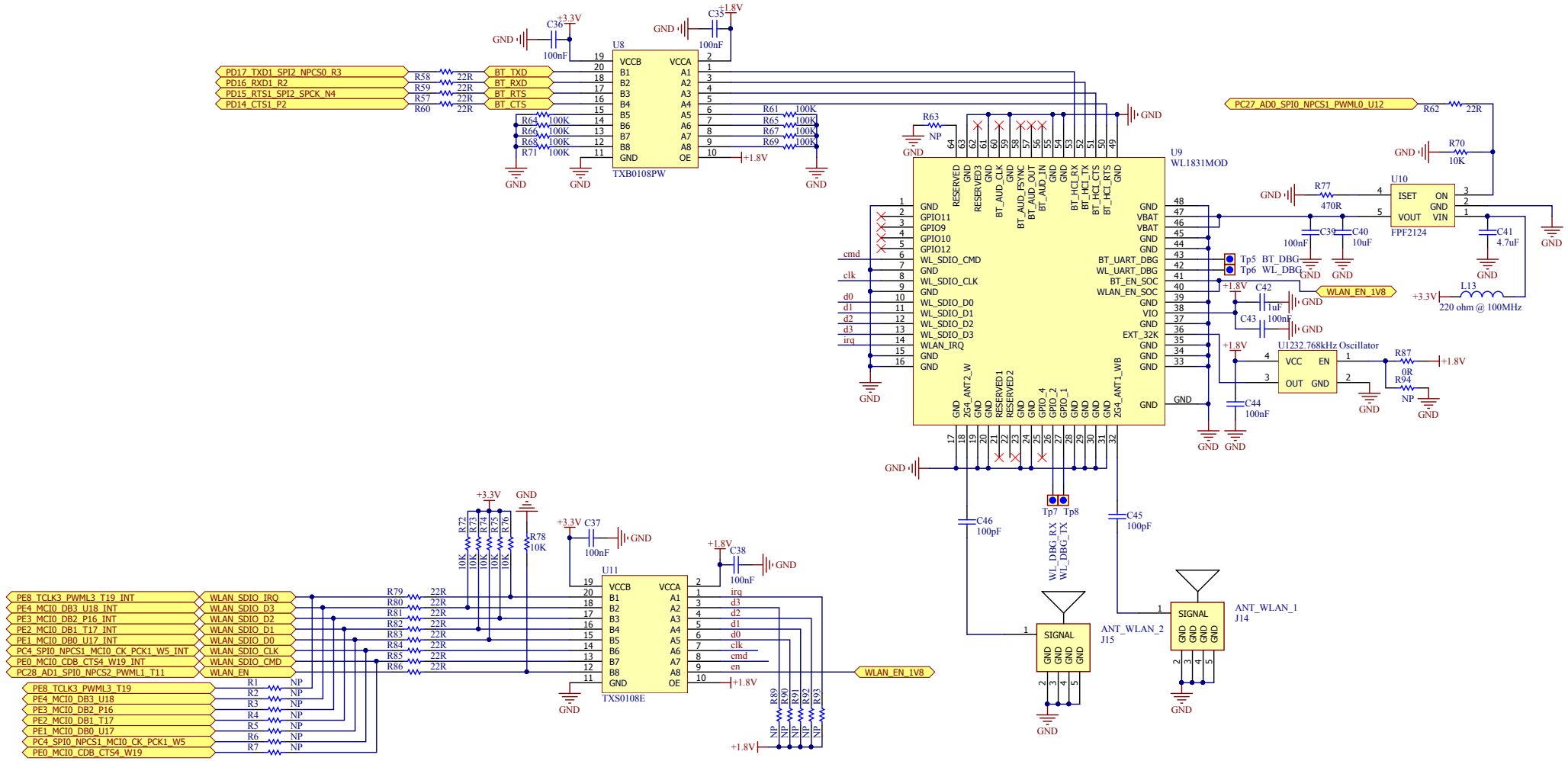

Title: *	Size: A3
	Rev: A
Author: *	Develer s.r.l. via Mugellese 1/A 50019 Campi Bisenzio Firenze ITALY
Approved: *	develer
File: wifi.schdoc	Date: 25/08/2015 Time: 16:39:17 Sheet 1 of 1

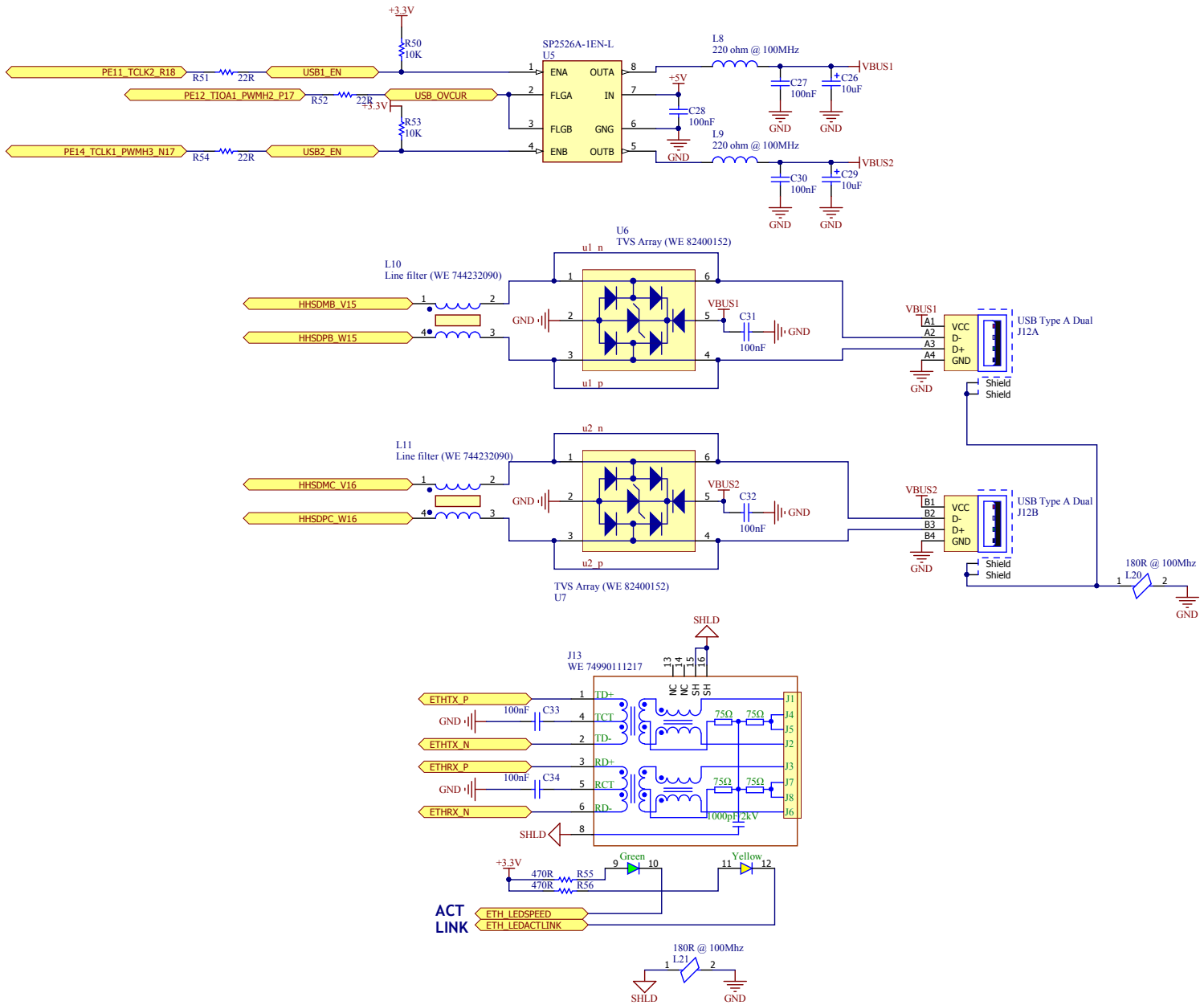

Title: *		Size: A3
		Rev: A
Author: *	Develer s.r.l. via Mugellese 1/A 50019 Campi Bisenzio Firenze ITALY	develer
Approved: *		
File: usb_ethernet.SchDoc	Date: 25/08/2015 Time: 16:39:17	Sheet 1 of 1

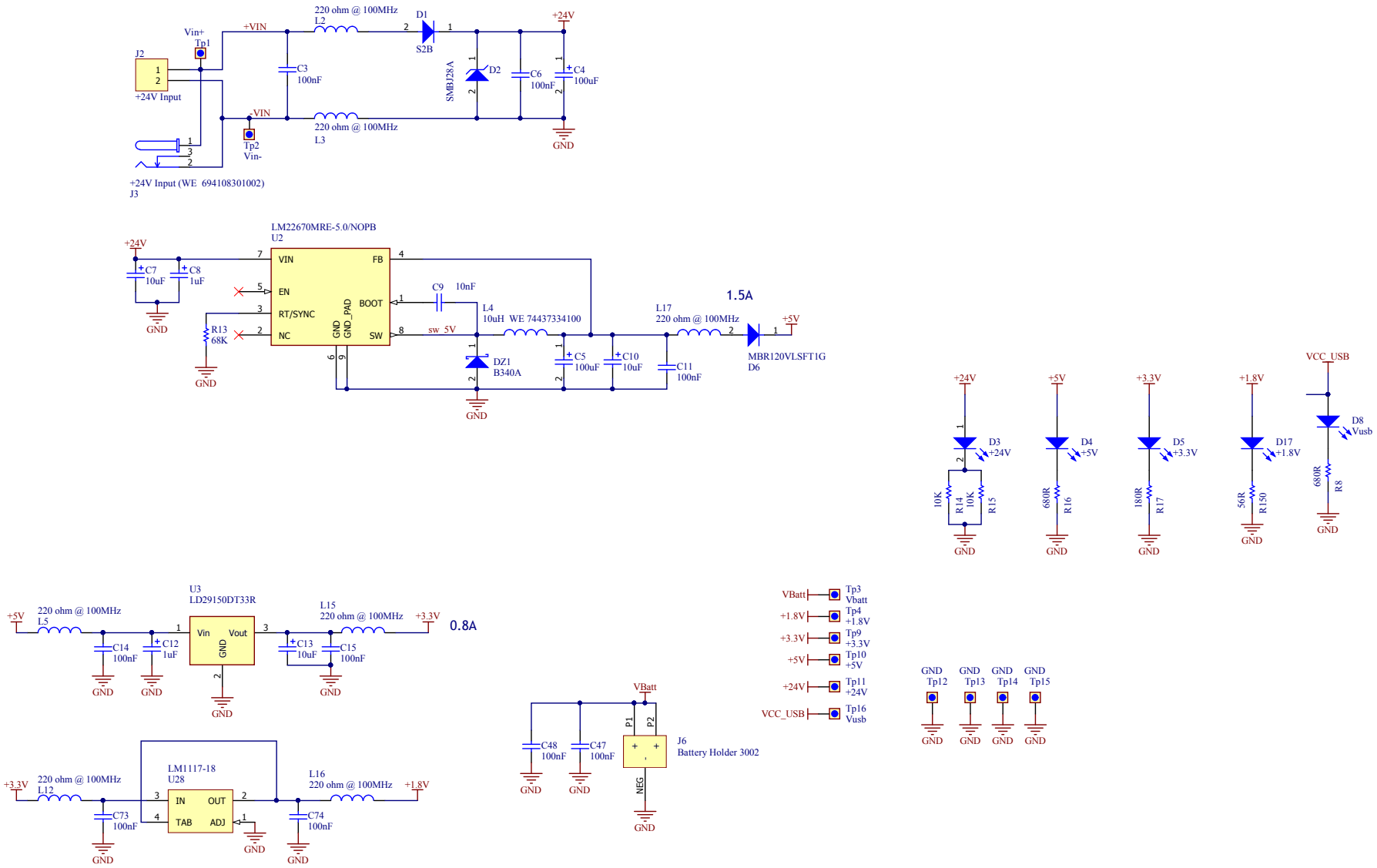

Title: *		Size: A3
		Rev: A
Author: *	Develer s.r.l. via Mugellese 1/A 50019 Campi Bisenzio Firenze ITALY	develer
Approved: *		
File: supply.SchDoc	Date: 25/08/2015 Time: 16:39:18	Sheet 1 of 1

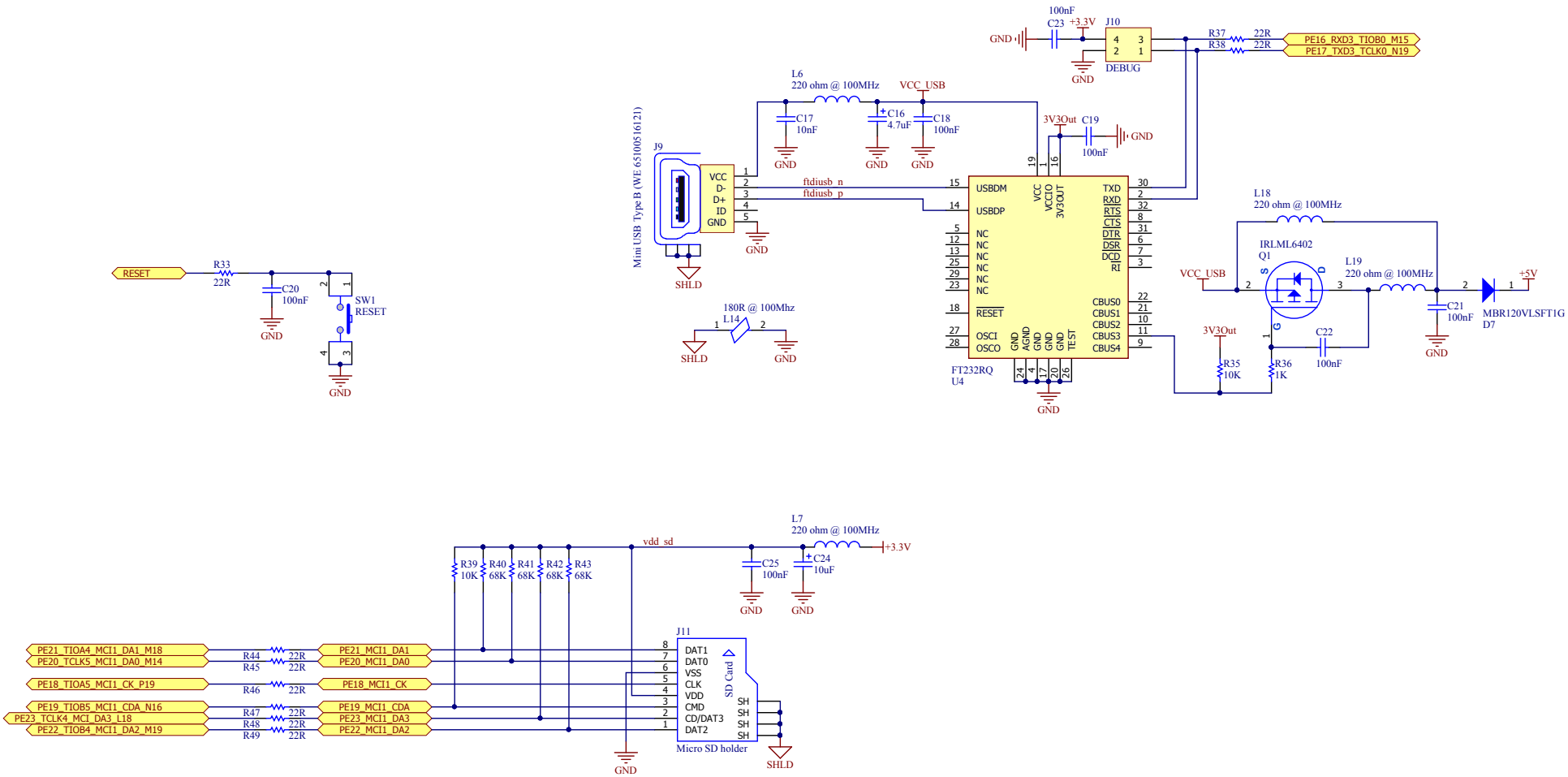

To boot from SD CARD use MCI1A

Title: *	Size: A3
	Rev: A
Author: *	Develer s.r.l. via Mugellese 1/A 50019 Campi Bisenzio Firenze ITALY
Approved: *	develer
File: sd_debug.SchDoc	Date: 25/08/2015 Time: 16:39:18 Sheet 1 of 1

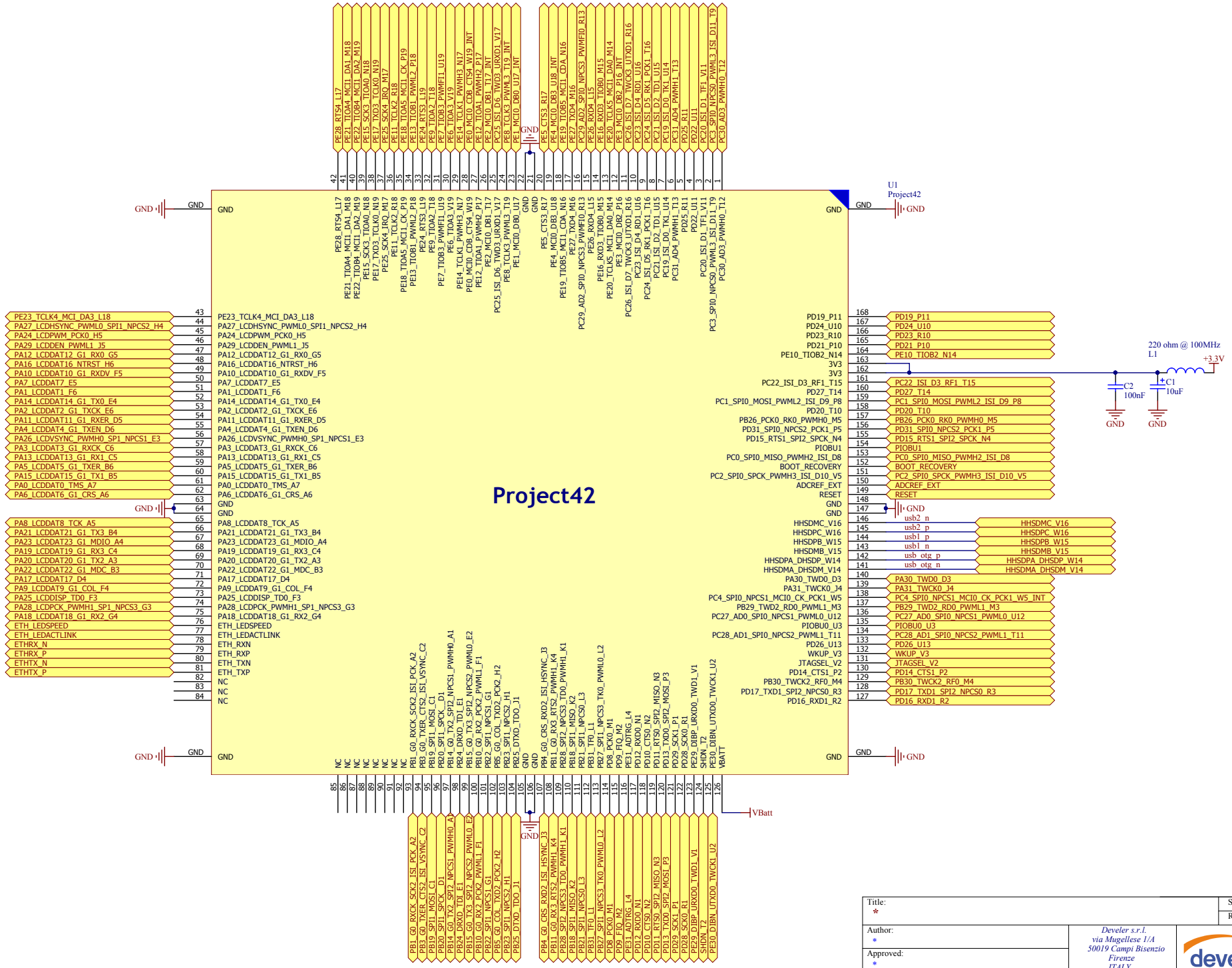

Title: *	Size: A3
	Rev: A
Author: *	Develer s.r.l. via Mugellese 1/A 50019 Campi Bisenzio Firenze ITALY
Approved: *	develer
File: develboard.SchDoc	Date: 25/08/2015 Time: 16:39:18 Sheet 1 of 1

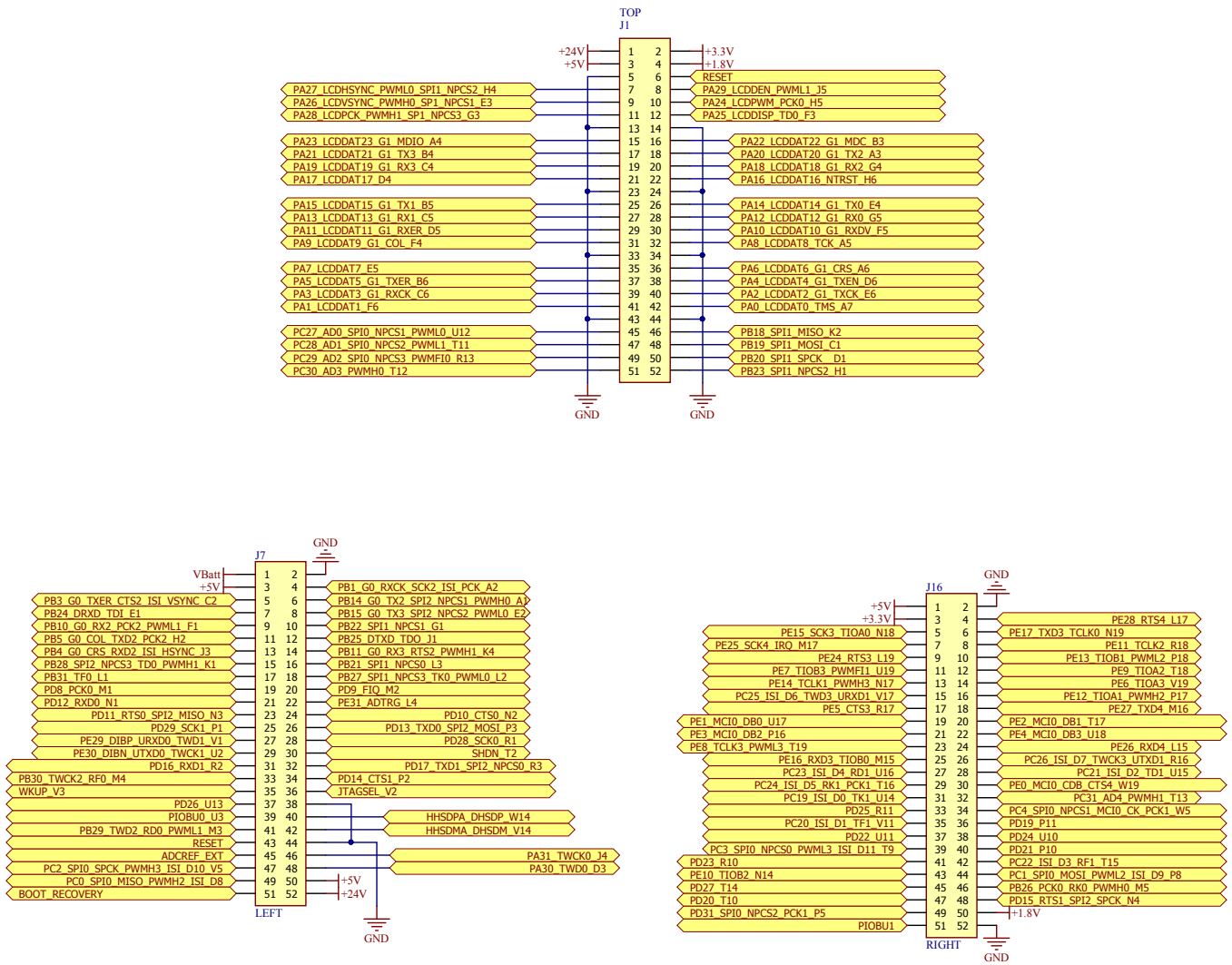

Title: *		Size: A3
		Rev: A
Author: *	Develer s.r.l. via Mugellese 1/A 50019 Campi Bisenzio Firenze ITALY	develer
Approved: *		
File: connectors.SchDoc	Date: 25/08/2015 Time: 16:39:18	Sheet 1 of 1