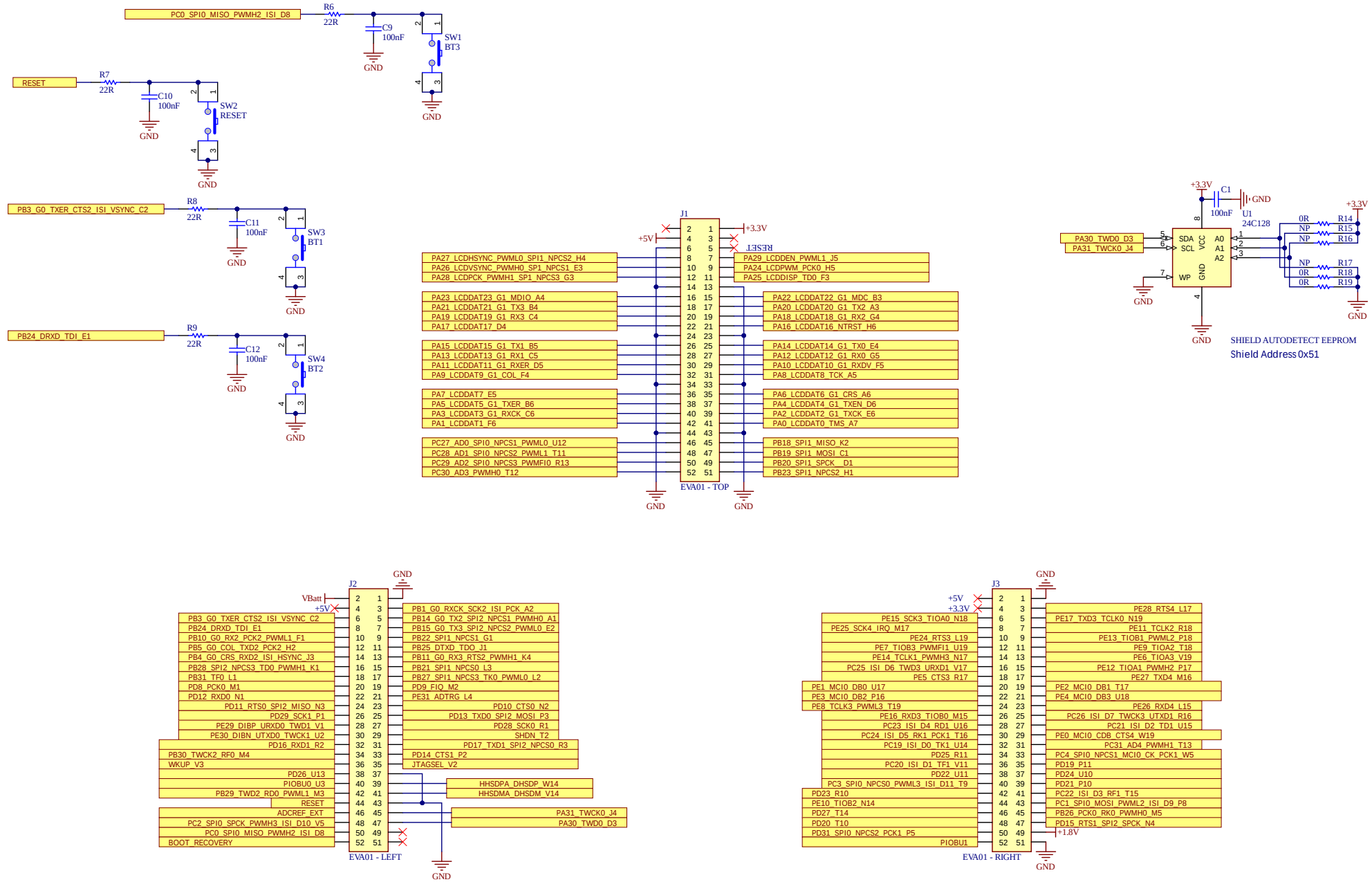
PC0_SPI0_MISO_PWMH2_ISI_D8
R6
22R
C9
100nF
SW1
BT3
GND
RESET
R7
22R
C10
100nF
SW2
RESET
PB3_G0_TXER_CTS2_ISI_VSYNC_C2
R8
22R
C11
100nF
SW3
BT1
PB24_DRXD_TDI_E1
R9
22R
C12
100nF
SW4
BT2
J1
+5V
+3.3V
RESET
PA27_LCDHSYNC_PWML0_SPI1_NPCS2_H4
PA26_LCDVSYNC_PWMH0_SPI1_NPCS1_E3
PA28_LCDPCK_PWMH1_SPI1_NPCS3_G3
PA29_LCDDEN_PWML1_J5
PA24_LCDPWM_PCK0_H5
PA25_LCDDISP_TD0_F3
PA23_LCDDAT23_G1_MDIO_A4
PA21_LCDDAT21_G1_TX3_B4
PA19_LCDDAT19_G1_RX3_C4
PA17_LCDDAT17_D4
PA22_LCDDAT22_G1_MDC_B3
PA20_LCDDAT20_G1_TX2_A3
PA18_LCDDAT18_G1_RX2_G4
PA16_LCDDAT16_NTRST_H6
PA15_LCDDAT15_G1_TX1_B5
PA13_LCDDAT13_G1_RX1_C5
PA11_LCDDAT11_G1_RXER_D5
PA9_LCDDAT9_G1_COL_F4
PA14_LCDDAT14_G1_TX0_E4
PA12_LCDDAT12_G1_RX0_G5
PA10_LCDDAT10_G1_RXDV_F5
PA8_LCDDAT8_TCK_A5
PA7_LCDDAT7_E5
PA5_LCDDAT5_G1_TXER_B6
PA3_LCDDAT3_G1_RXCK_C6
PA1_LCDDAT1_F6
PA6_LCDDAT6_G1_CRS_A6
PA4_LCDDAT4_G1_TXEN_D6
PA2_LCDDAT2_G1_TXCK_E6
PA0_LCDDAT0_TMS_A7
PC27_AD0_SPI0_NPCS1_PWML0_U12
PC28_AD1_SPI0_NPCS2_PWML1_T11
PC29_AD2_SPI0_NPCS3_PWMFI0_R13
PC30_AD3_PWMH0_T12
PB18_SPI1_MISO_K2
PB19_SPI1_MOSI_C1
PB20_SPI1_SPCK_D1
PB23_SPI1_NPCS2_H1
EVA01 - TOP
+3.3V
C1
100nF
U1
24C128
SDA
SCL
WP
VCC
GND
A0
A1
A2
PA30_TWD0_D3
PA31_TWCK0_J4
0R
NP
R14
R15
R16
R17
R18
R19
SHIELD AUTODETECT EEPROM
Shield Address 0x51
J2
VBatt
PB1_G0_RXCK_SCK2_ISI_PCK_A2
PB14_G0_TX2_SPI2_NPCS1_PWMH0_A1
PB15_G0_TX3_SPI2_NPCS2_PWML0_E2
PB22_SPI1_NPCS1_G1
PB25_DTXD_TDO_J1
PB11_G0_RX3_RTS2_PWMH1_K4
PB21_SPI1_NPCS0_L3
PB27_SPI1_NPCS3_TK0_PWML0_L2
PD9_FIQ_M2
PE31_ADTRG_L4
PD10_CTS0_N2
PD13_TXD0_SPI2_MOSI_P3
PD28_SCK0_R1
SHDN_T2
PD17_TXD1_SPI2_NPCS0_R3
PD14_CTS1_P2
JTAGSEL_V2
HHSDPA_DHSDP_W14
HHSDMA_DHSDM_V14
PA31_TWCK0_J4
PA30_TWD0_D3
PB3_G0_TXER_CTS2_ISI_VSYNC_C2
PB24_DRXD_TDI_E1
PB10_G0_RX2_PCK2_PWML1_F1
PB5_G0_COL_TXD2_PCK2_H2
PB4_G0_CRS_RXD2_ISI_HSYNC_J3
PB28_SPI2_NPCS3_TD0_PWMH1_K1
PB31_TF0_L1
PD8_PCK0_M1
PD12_RXD0_N1
PD11_RTS0_SPI2_MISO_N3
PD29_SCK1_P1
PE29_DIBP_URXD0_TWD1_V1
PE30_DIBN_UTXD0_TWCK1_U2
PD16_RXD1_R2
PB30_TWCK2_RF0_M4
WKUP_V3
PD26_U13
PIOBU0_U3
PB29_TWD2_RD0_PWML1_M3
RESET
ADCREF_EXT
PC2_SPI0_SPCK_PWMH3_ISI_D10_V5
PC0_SPI0_MISO_PWMH2_ISI_D8
BOOT_RECOVERY
EVA01 - LEFT
J3
+5V
+3.3V
PE15_SCK3_TIOA0_N18
PE25_SCK4_IRQ_M17
PE24_RTS3_L19
PE7_TIOB3_PWMFI1_U19
PE14_TCLK1_PWMH3_N17
PC25_ISI_D6_TWD3_URXD1_V17
PE5_CTS3_R17
PE1_MCI0_DB0_U17
PE3_MCI0_DB2_P16
PE8_TCLK3_PWML3_T19
PE16_RXD3_TIOB0_M15
PC23_ISI_D4_RD1_U16
PC24_ISI_D5_RK1_PCK1_T16
PC19_ISI_D0_TK1_U14
PD25_R11
PC20_ISI_D1_TF1_V11
PD22_U11
PC3_SPI0_NPCS0_PWML3_ISI_D11_T9
PD23_R10
PE10_TIOB2_N14
PD27_T14
PD20_T10
PD31_SPI0_NPCS2_PCK1_P5
PIOBU1
PE28_RTS4_L17
PE17_TXD3_TCLK0_N19
PE11_TCLK2_R18
PE13_TIOB1_PWML2_P18
PE9_TIOA2_T18
PE6_TIOA3_V19
PE12_TIOA1_PWMH2_P17
PE27_TXD4_M16
PE2_MCI0_DB1_T17
PE4_MCI0_DB3_U18
PE26_RXD4_L15
PC26_ISI_D7_TWCK3_UTXD1_R16
PC21_ISI_D2_TD1_U15
PE0_MCI0_CDB_CTS4_W19
PC31_AD4_PWMH1_T13
PC4_SPI0_NPCS1_MCI0_CK_PCK1_W5
PD19_P11
PD24_U10
PD21_P10
PC22_ISI_D3_RF1_T15
PC1_SPI0_MOSI_PWML2_ISI_D9_P8
PB26_PCK0_RK0_PWMH0_M5
PD15_RTS1_SPI2_SPCK_N4
+1.8V
EVA01 - RIGHT

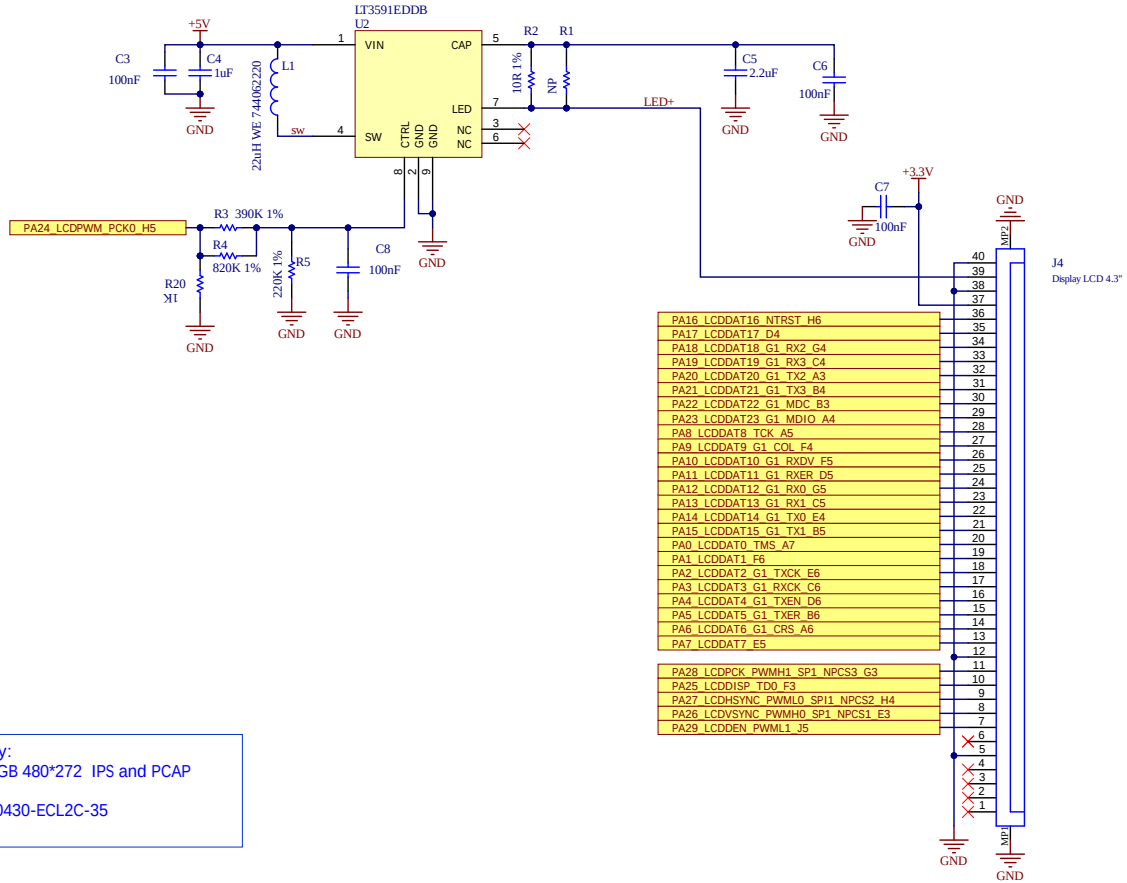

LCD Display:
TFT 4.3" RGB 480*272 IPS and PCAP
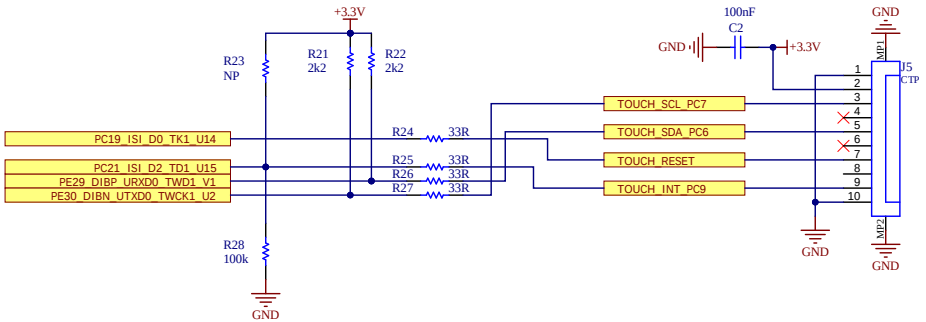
Code: STT0430-ECL2C-35