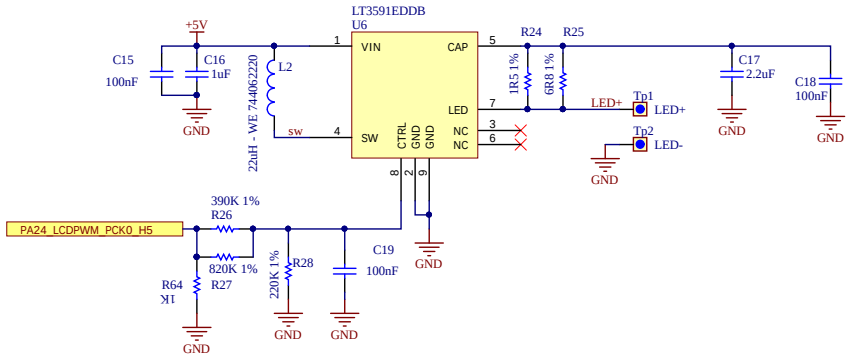

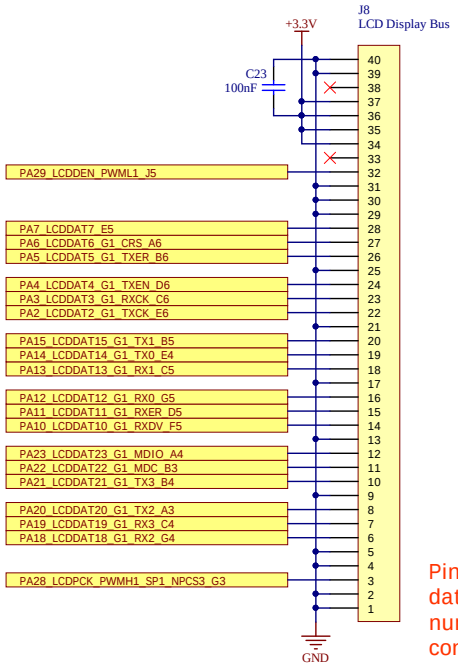

LCD Display:
TFT 7" RGB 800*480
CON PCAP

Code: TST070WVBE-31C

Pin numbers are inverted wrt datasheet because the pin numbering on the molex connector is inverted as well!

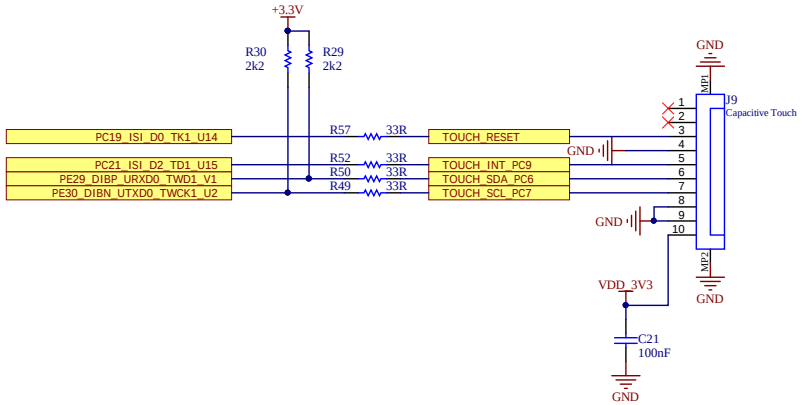

Title:	7'' LCD display with PCAP	Develer s.r.l.	Status: Reference
Project:	Shield 7" Display	Via San Quirico 233/2	Prj Rev: 3
License:	MIT	50013 Campi Bisenzio	Size: A3
Author:	Daniele Basile <asterix@develer.com>	Firenze - ITALY	
File:	lcd.SchDoc	Date: 28/12/2015	Time: 18:31:04
Sheet	1 of 1		

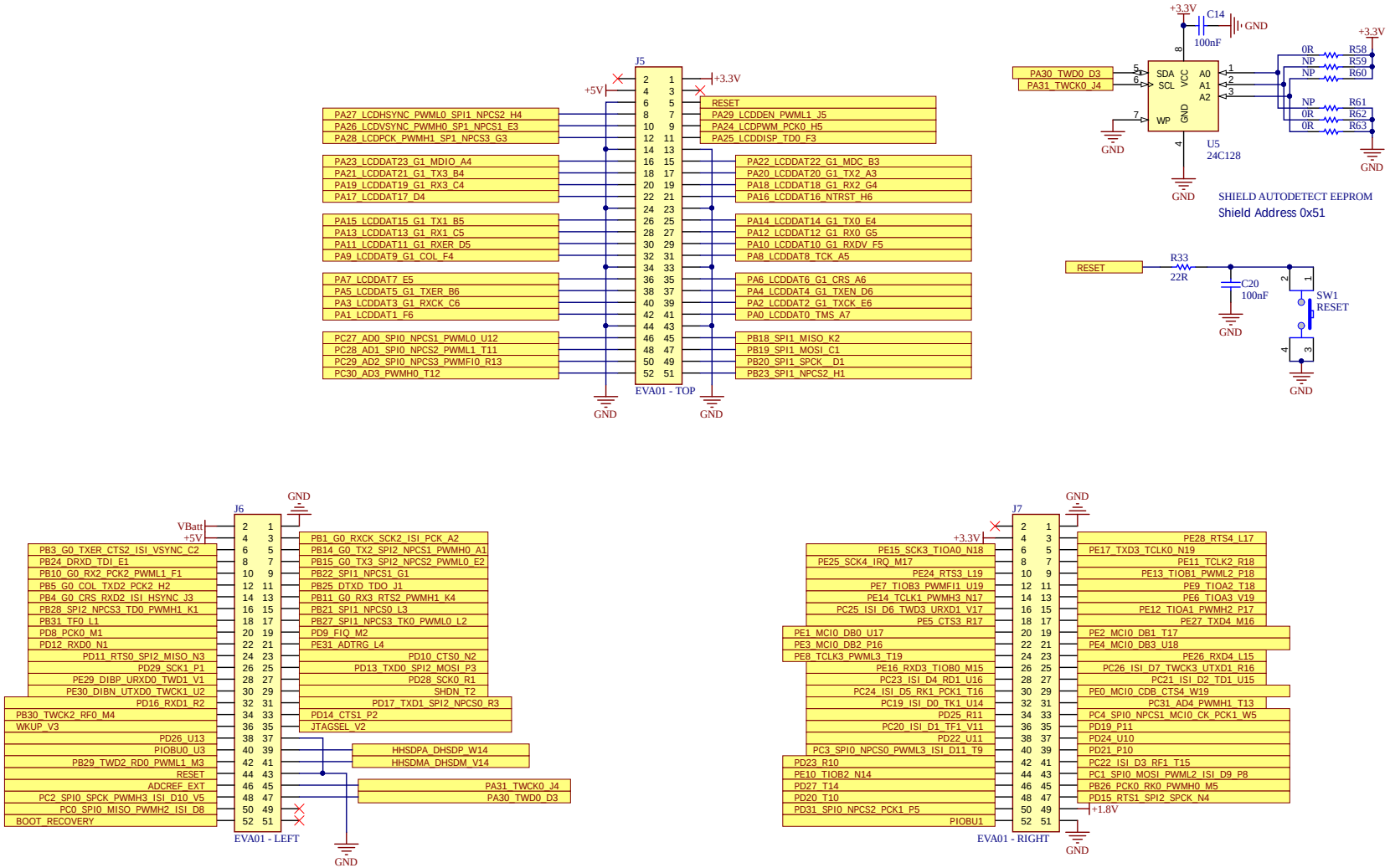

Title:	**DevelBoard EVA Main Connectors**	**Develer s.r.l.** via Mugellese 1/A 50019 Campi Bisenzio Firenze - ITALY	Status: Reference
Project:	Shield 7" Display		Prj Rev: 3 / Size: A3
License:	MIT		
Author:	Daniele Basile <asterix@develer.com>	File: eva01_connectors.SchDoc	Date: 28/12/2015 / Time: 18:31:04 / Sheet 1 of 3

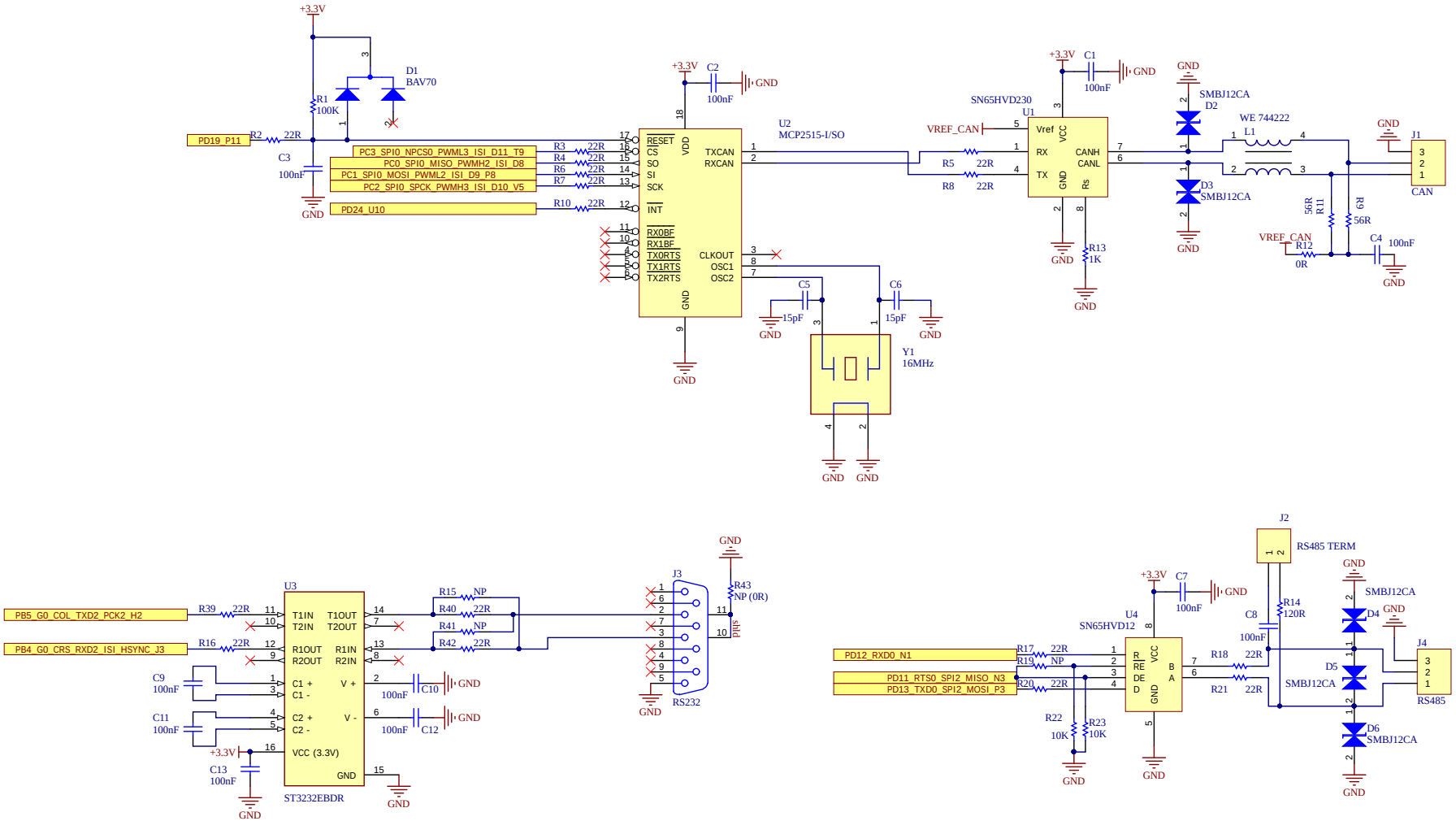

Title:	CAN/RS232/RS485	Develer s.r.l. via Mugellese 1/A 50019 Campi Bisenzio Firenze - ITALY	Status: Reference
Project:	Shield 7" Display		Prj Rev: 3 / Size: A3
License:	MIT		
Author:	Francesco Sacchi <batt@develer.com>		
File: can.SchDoc	Date: 28/12/2015	Time: 18:31:05	Sheet 3 of 3