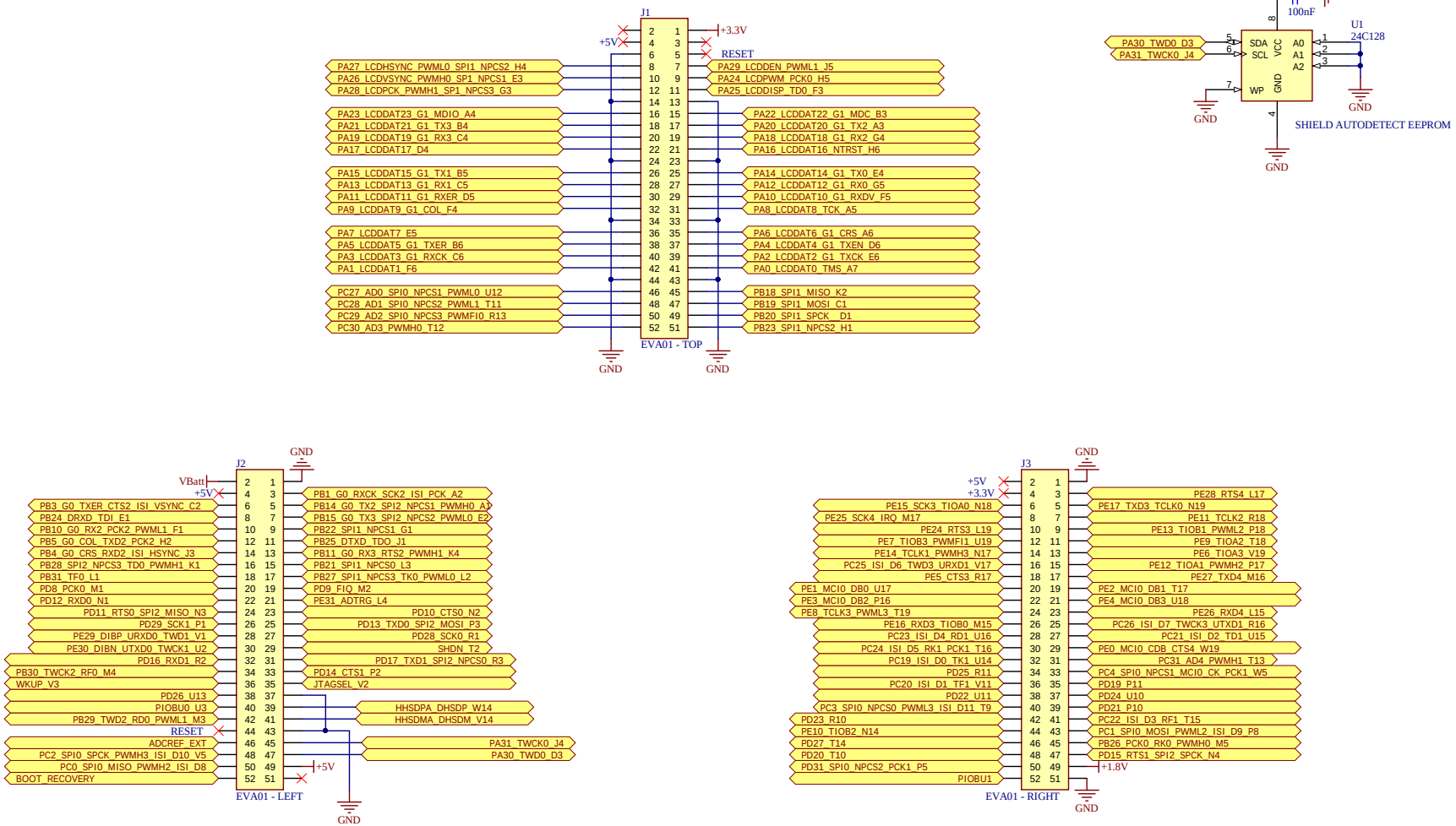

Title:
DevelBoard EVA Main Connectors

Author:
Daniele Basile <asterix@develer.com>

Develer s.r.l.
via Mugellese 1/A
50019 Campi Bisenzio
Firenze
ITALY

License:	Hw Rev:	Rev:	Size:
BSD	R1	A	A3

File: eva01_connectors.SchDoc | Date: 09/02/2016 | Time: 10:50:19 | Sheet 1 of 2

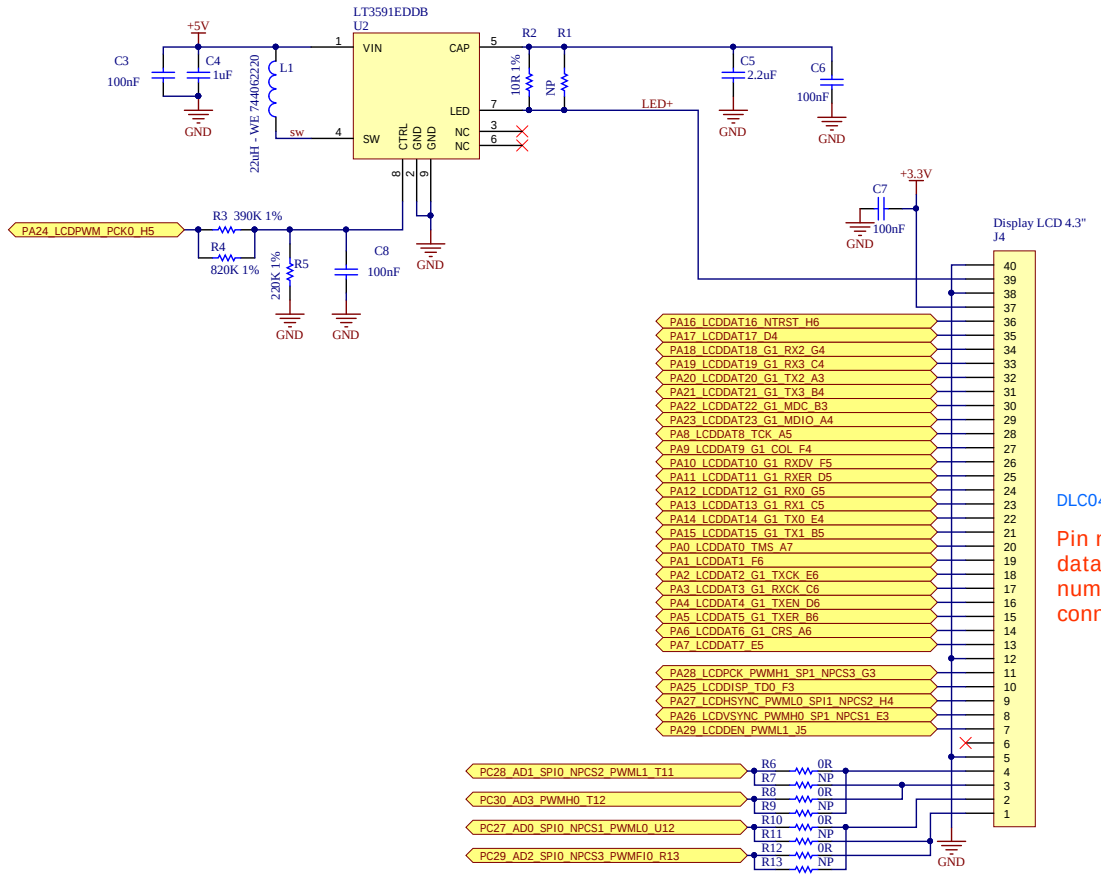

DLC0430EZG-T-2

Pin numbers are inverted wrt datasheet because the pin numbering on the molex connector is inverted as well!

Title: *4.3" LCD - touchscreen*				
Author: *Francesco Sacchi <batt@develer.com>*				*Develer s.r.l. via Mugellese 1/A 50019 Campi Bisenzio Firenze ITALY*
License: BSD	Hw Rev: R1	Rev: A	Size: A3	develer
File: display.SchDoc			Date: 09/02/2016 Time: 10:50:19	Sheet 2 of 2