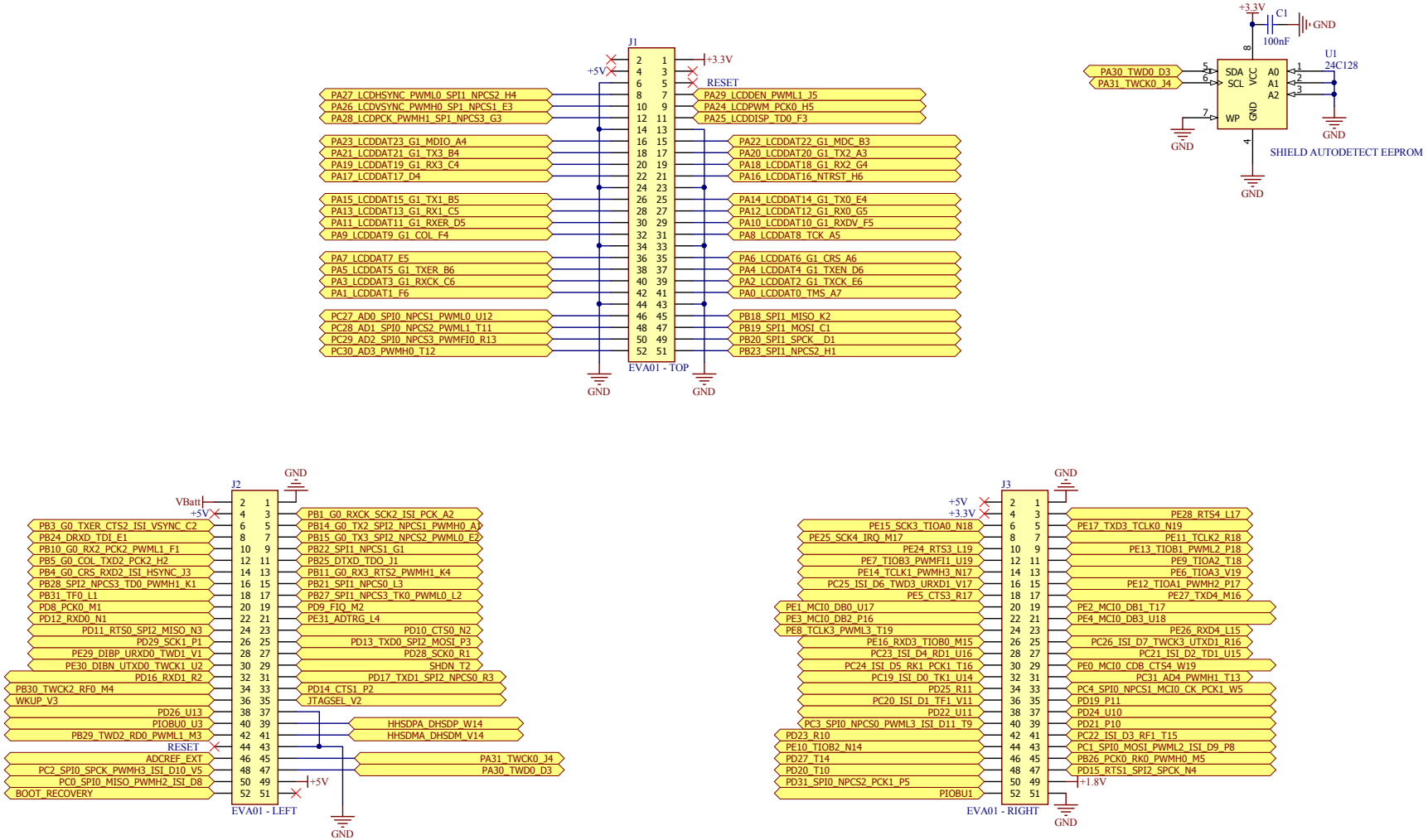

Title:
DevelBoard EVA Main Connectors

Author:
Daniele Basile <asterix@develer.com>

Develer s.r.l.
via Mugellese 1/A
50019 Campi Bisenzio
Firenze
ITALY

License:
BSD

Rev: A

Size: A3

File: eva01_connectors.SchDoc

Date: 19/01/2016 Time: 11:20:10 Sheet 1 of 2

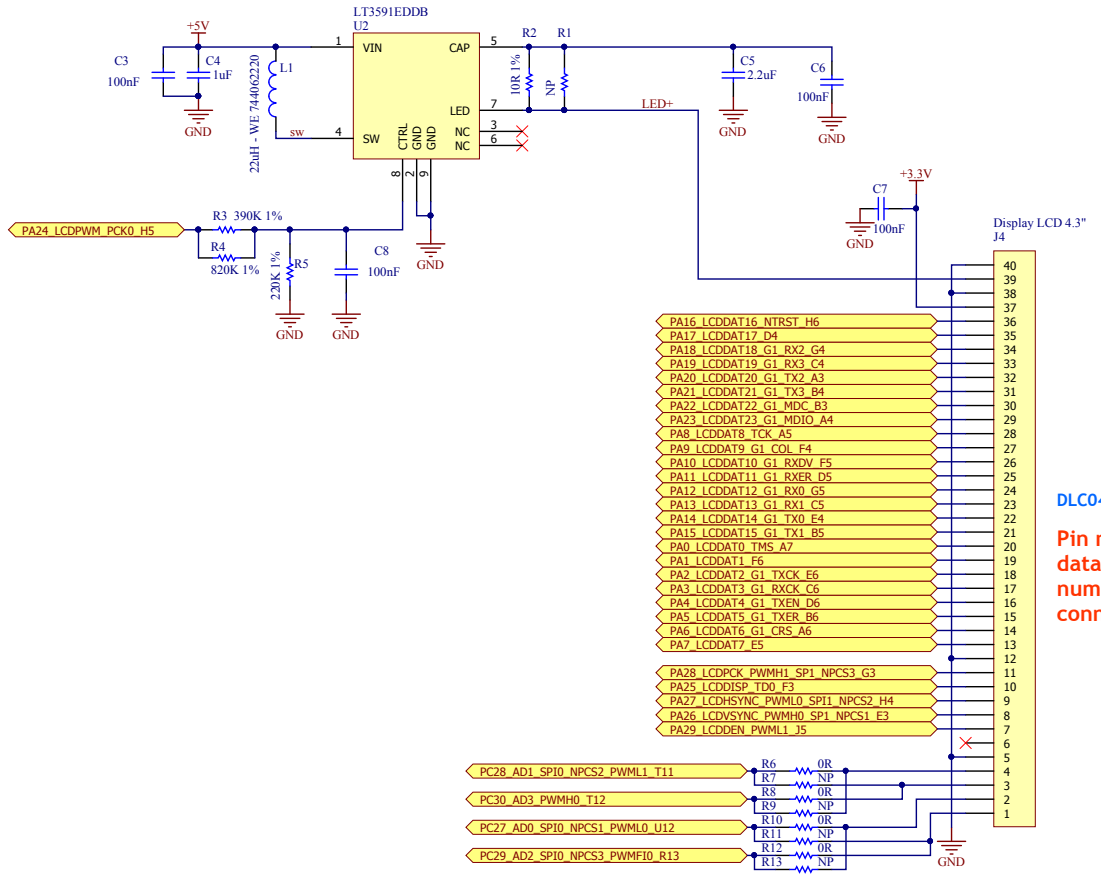

DLC0430EZG-T-2

Pin numbers are inverted wrt datasheet because the pin numbering on the molex connector is inverted as well!

Title: *4.3" LCD - touchscreen*			
Author: *Francesco Sacchi <batt@develer.com>*			*Develer s.r.l. via Mugellese 1/A 50019 Campi Bisenzio Firenze ITALY*
License: BSD	Rev: A	Size: A3	develer
File: display.SchDoc	Date: 19/01/2016	Time: 11:20:10	Sheet 2 of 2