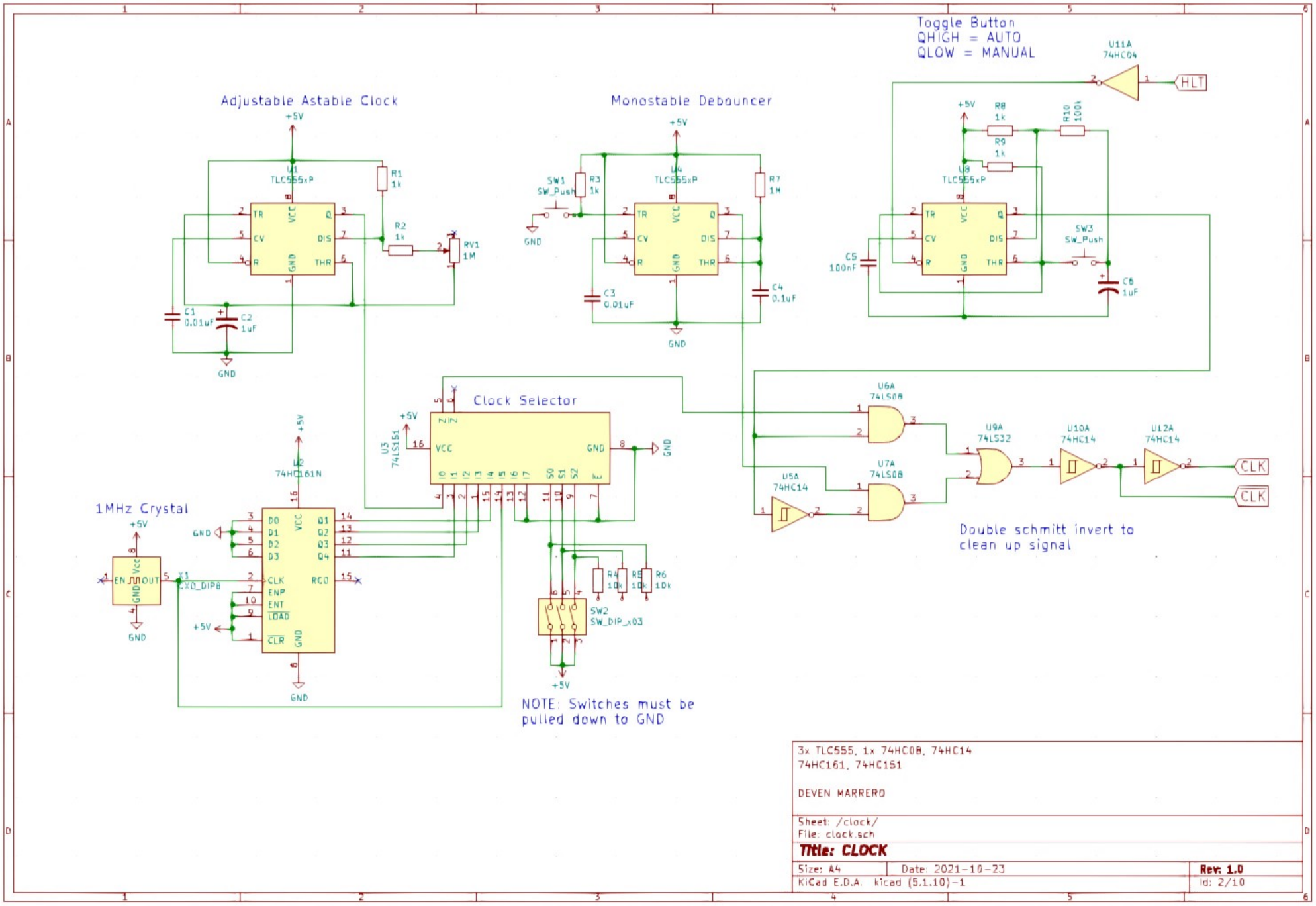
Adjustable Astable Clock
Monostable Debouncer
Toggle Button
QHIGH = AUTO
QLOW = MANUAL
Clock Selector
1MHz Crystal
Double schmitt invert to clean up signal
NOTE: Switches must be pulled down to GND
U1 TLC555xP
U4 TLC555xP
U8 TLC555xP
U11A 74HC04
U6A 74LS08
U7A 74LS08
U9A 74LS32
U10A 74HC14
U12A 74HC14
U5A 74HC14
U3 74LS151
U2 74HC161N
SW1 SW_Push
SW2 SW_DIP_x03
SW3 SW_Push
HLT
CLK
CLK
+5V
GND
3x TLC555, 1x 74HC08, 74HC14
74HC161, 74HC151
DEVEN MARRERO
Sheet: /clock/
File: clock.sch
Title: CLOCK
Size: A4
Date: 2021-10-23
Rev: 1.0
KiCad E.D.A. kicad (5.1.10)-1
Id: 2/10