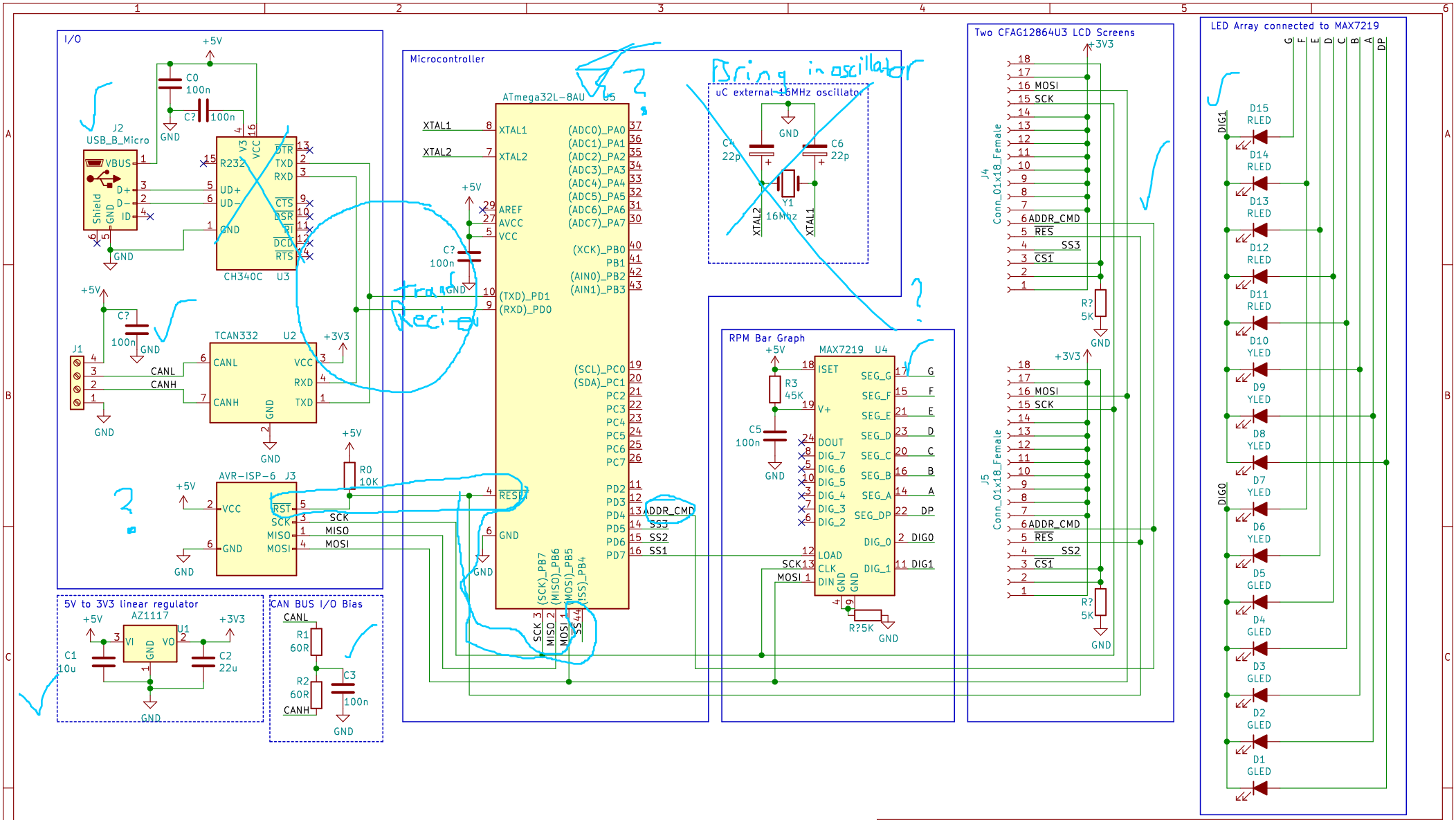
I/O
Microcontroller
ATmega32L-8AU U5
uC external 16MHz oscillator
Bring in oscillator
Two CFAG12864U3 LCD Screens
LED Array connected to MAX7219
J2 USB_B_Micro
CH340C U3
TCAN332 U2
AVR-ISP-6 J3
J1
RPM Bar Graph
MAX7219 U4
Conn_01x18_Female J4
Conn_01x18_Female J5
5V to 3V3 linear regulator
AZ1117
CAN BUS I/O Bias
Transmit
Receive
XTAL1
XTAL2
CANL
CANH
SCK
MISO
MOSI
SS1
SS2
SS3
ADDR_CMD
RES
DIG0
DIG1
Devin Moore
WSU Racing
Sheet: /
File: wsuRacing_WheelDisplay_Rv2_DSM.sch
Title: Wheel Display
Size: A4
Date: 2020/01/10
Rev: 2
KiCad E.D.A. kicad (5.1.6)-1
Id: 1/1