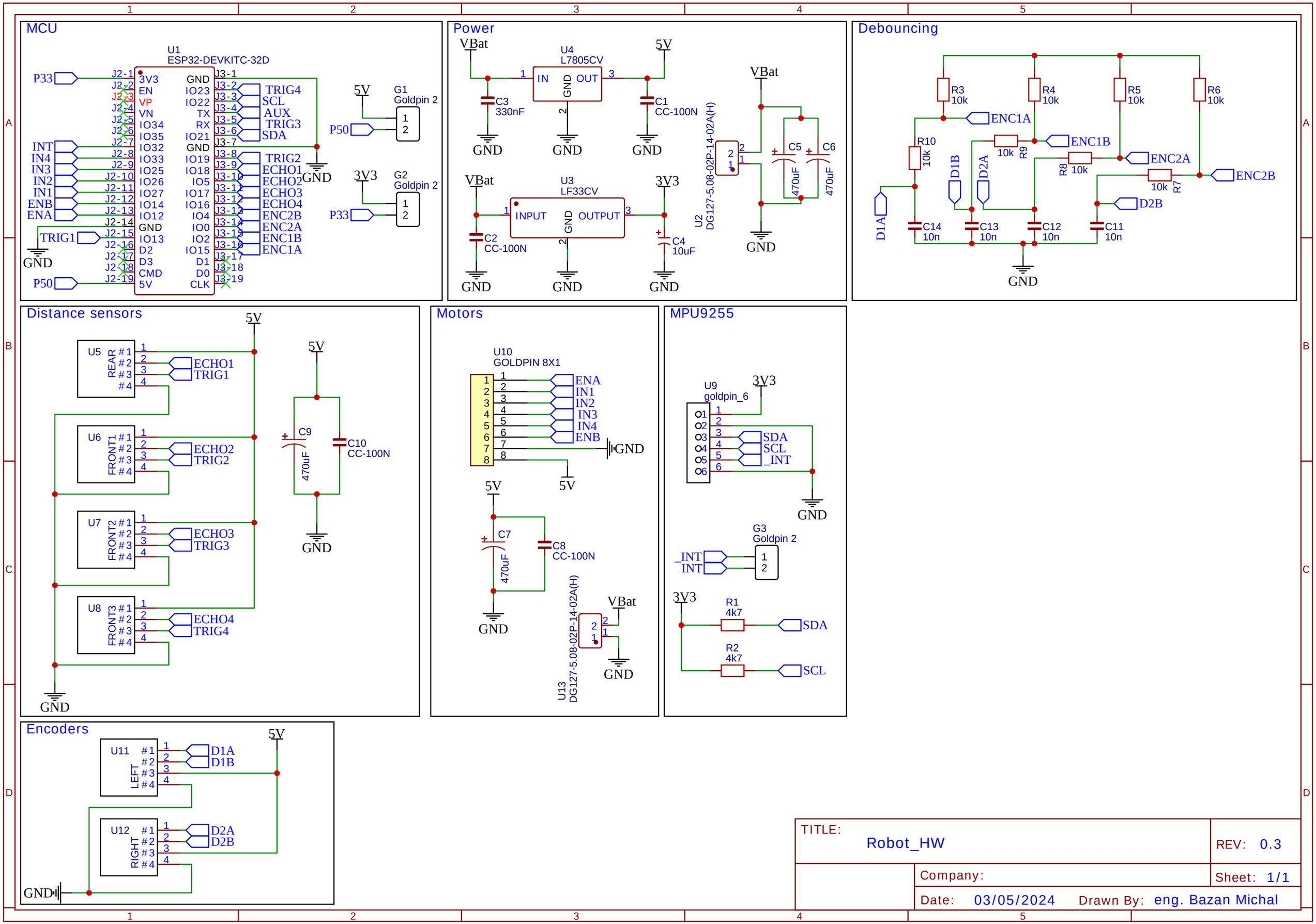
MCU
U1
ESP32-DEVKITC-32D
P33
INT
IN4
IN3
IN2
IN1
ENB
ENA
TRIG1
P50
GND
3V3
EN
VP
VN
IO34
IO35
IO32
IO33
IO25
IO26
IO27
IO14
IO12
IO13
D2
D3
CMD
5V
IO23
IO22
TX
RX
IO21
IO19
IO18
IO5
IO17
IO16
IO4
IO0
IO2
IO15
D1
D0
CLK
TRIG4
SCL
AUX
TRIG3
SDA
TRIG2
ECHO1
ECHO2
ECHO3
ECHO4
ENC2B
ENC2A
ENC1B
ENC1A
G1
Goldpin 2
G2
Goldpin 2
Power
VBat
U4
L7805CV
IN
OUT
C3
330nF
C1
CC-100N
5V
U3
LF33CV
INPUT
OUTPUT
C2
CC-100N
C4
10uF
3V3
U2
DG127-5.08-02P-14-02A(H)
C5
C6
470uF
Debouncing
R3
10k
R4
10k
R5
10k
R6
10k
R10
10k
R9
R8
R7
D1A
D1B
D2A
D2B
C14
10n
C13
10n
C12
10n
C11
10n
Distance sensors
U5
REAR
U6
FRONT1
U7
FRONT2
U8
FRONT3
C9
470uF
C10
CC-100N
Motors
U10
GOLDPIN 8X1
ENA
IN1
IN2
IN3
IN4
ENB
C7
470uF
C8
CC-100N
U13
DG127-5.08-02P-14-02A(H)
MPU9255
U9
goldpin_6
SDA
SCL
_INT
G3
Goldpin 2
R1
4k7
R2
4k7
Encoders
U11
LEFT
U12
RIGHT
TITLE:
Robot_HW
REV: 0.3
Company:
Sheet: 1/1
Date: 03/05/2024
Drawn By: eng. Bazan Michal