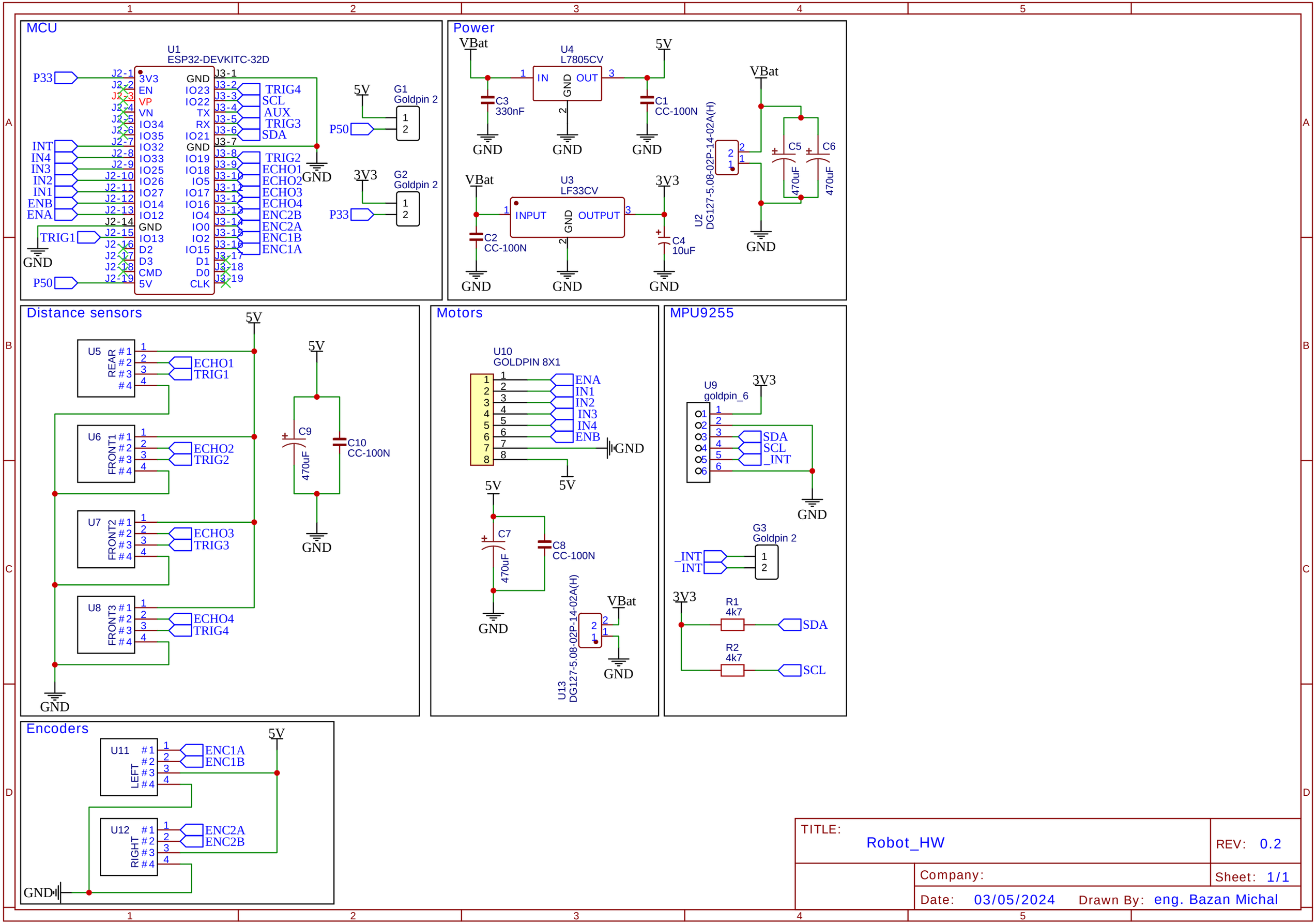
MCU
U1
ESP32-DEVKITC-32D
P33
INT
IN4
IN3
IN2
IN1
ENB
ENA
TRIG1
GND
P50
J2-1 3V3
J2-2 EN
J2-3 VP
J2-4 VN
J2-5 IO34
J2-6 IO35
J2-7 IO32
J2-8 IO33
J2-9 IO25
J2-10 IO26
J2-11 IO27
J2-12 IO14
J2-13 IO12
J2-14 GND
J2-15 IO13
J2-16 D2
J2-17 D3
J2-18 CMD
J2-19 5V
GND J3-1
IO23 J3-2
IO22 J3-3
TX J3-4
RX J3-5
IO21 J3-6
GND J3-7
IO19 J3-8
IO18 J3-9
IO5 J3-10
IO17 J3-11
IO16 J3-12
IO4 J3-13
IO0 J3-14
IO2 J3-15
IO15 J3-16
D1 J3-17
D0 J3-18
CLK J3-19
TRIG4
SCL
AUX
TRIG3
SDA
TRIG2
ECHO1
ECHO2
ECHO3
ECHO4
ENC2B
ENC2A
ENC1B
ENC1A
5V
G1
Goldpin 2
P50
3V3
G2
Goldpin 2
P33
Power
VBat
U4
L7805CV
IN
OUT
GND
C3
330nF
C1
CC-100N
5V
U3
LF33CV
INPUT
OUTPUT
C2
CC-100N
C4
10uF
3V3
U2
DG127-5.08-02P-14-02A(H)
C5
470uF
C6
470uF
Distance sensors
U5 REAR
U6 FRONT1
U7 FRONT2
U8 FRONT3
#1
#2
#3
#4
ECHO1
TRIG1
ECHO2
TRIG2
ECHO3
TRIG3
ECHO4
TRIG4
C9
470uF
C10
CC-100N
Motors
U10
GOLDPIN 8X1
ENA
IN1
IN2
IN3
IN4
ENB
C7
470uF
C8
CC-100N
U13
DG127-5.08-02P-14-02A(H)
MPU9255
U9
goldpin_6
SDA
SCL
_INT
G3
Goldpin 2
_INT
INT
R1
4k7
R2
4k7
Encoders
U11 LEFT
U12 RIGHT
ENC1A
ENC1B
ENC2A
ENC2B
TITLE:
Robot_HW
REV: 0.2
Company:
Sheet: 1/1
Date: 03/05/2024
Drawn By: eng. Bazan Michal