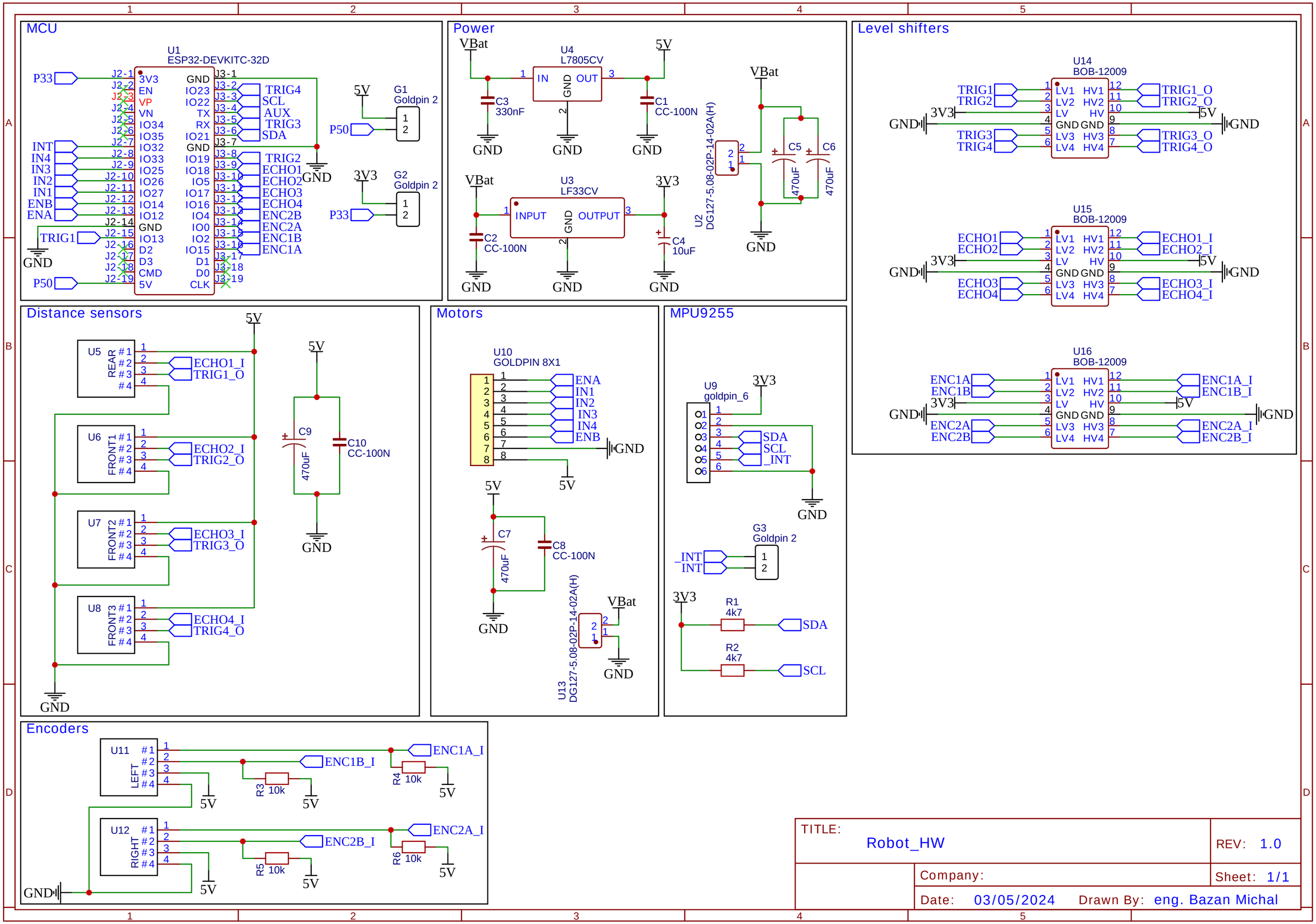

TITLE: Robot_HW	REV: 1.0
Company:	Sheet: 1/1
Date: 03/05/2024 Drawn By: eng. Bazan Michal	