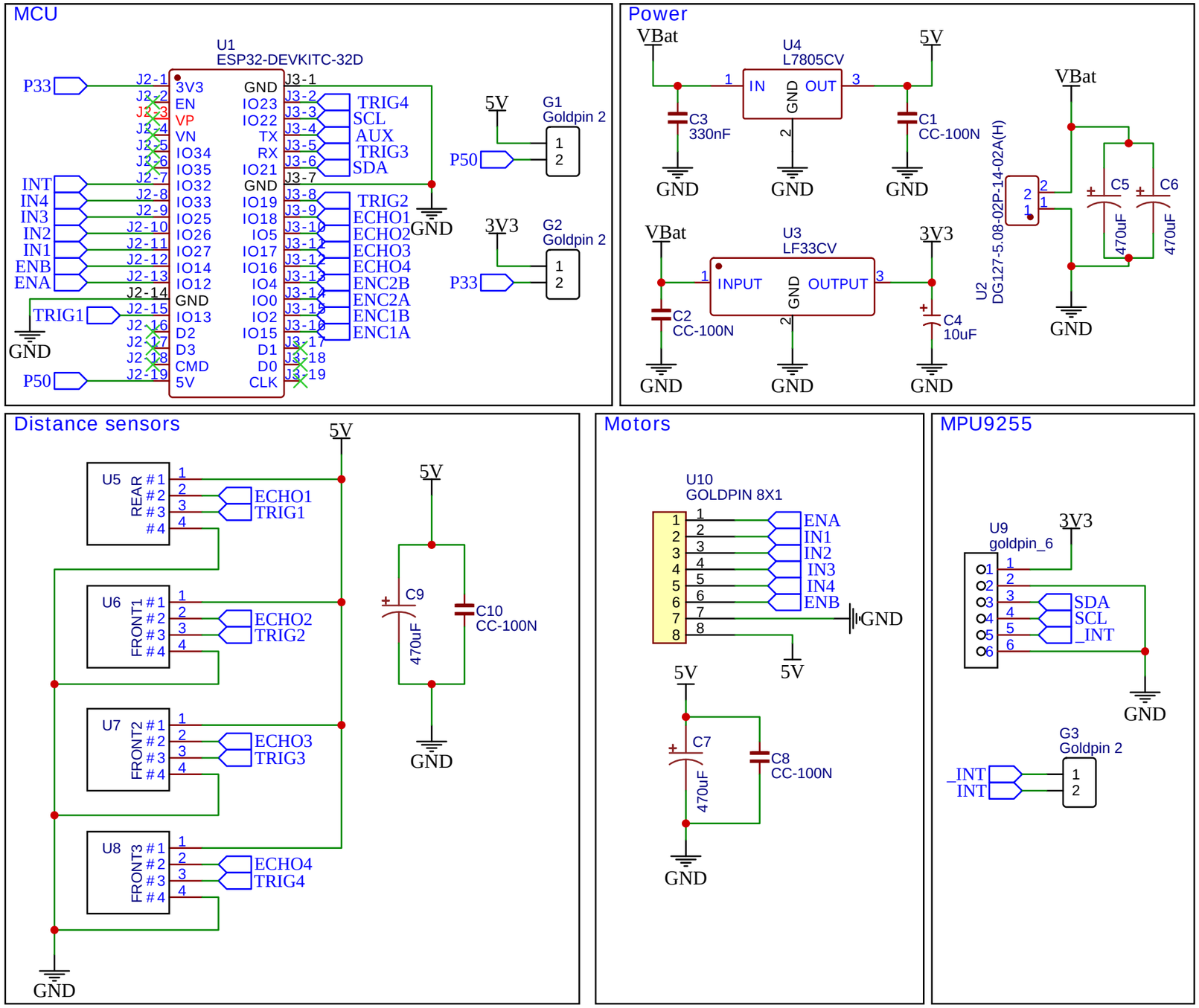

TITLE: Robot_HW		REV: 0.1
	Company:	Sheet: 1/1
	Date: 03/05/2024 Drawn By: eng. Bazan Michal	