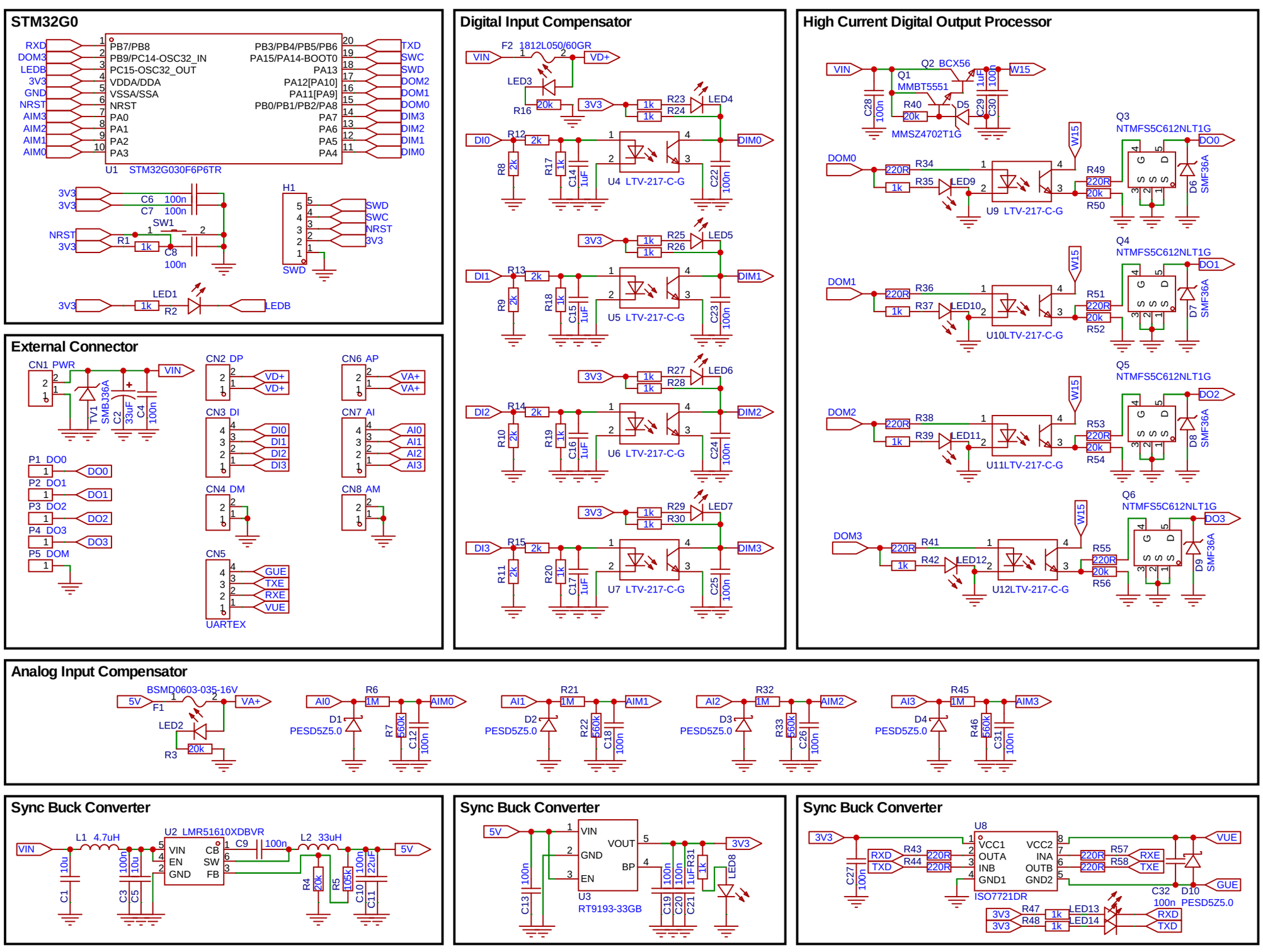

Title	Mini Device			Create at	2026-03-31
				Page	1 From 1
Drawn by	Dewa Pramudya	Version	Size	E-T-A Indonesia	
Reviewed by		V1.0	A4		
Approved by					