SERVICE MANUAL SECTION

FE 300, RE 200, RE 300 Models Built March 1, 2004 and After — ELECTRICAL CIRCUIT DIAGRAMS

Model: FE 300
Start Date: 03/01/2004

Model: RE 200
Start Date: 03/01/2004

Model: RE 300
Start Date: 03/01/2004

S08297

11/29/2006

Copyright © 11/29/2006 International Truck and Engine Corporation

Table of Contents

1. ELECTRICAL CIRCUIT DIAGRAMS — RE 200, RE 300....1
1.1. INSTRUCTIONS AND CHARTS (CHAPTER 1)....1
International Circuit Identification Chart, p. 1....1
International Circuit Identification Chart, p. 2....2
Circuit Diagram Instructions, p. 3....3
Circuit Diagram Instructions, p. 4....4
Schematic Symbols, p. 5....5
Relay Pinout, Function Data, and Sealed Relay, p. 6....6
1.2. 12 VOLT POWER DISTRIBUTION (CHAPTER 2)....7
Battery/Alternator With VT 365, p. 1....7
Battery/Alternator With I6, p. 2....8
Key Switch, p. 3....9
Battery/Alternator W/VT 365 for Clean Power, p. 4....10
Battery/Alternator W/I6 for Clean Power, p. 5....11
1.3. CAB ACCESSORIES (CHAPTER 3)....12
Ammeter, p. 1....12
Horn, p. 2....13
Turn Signals, International Turn Signal Switch (Stationary Column), p. 3....14
Turn Signals, Douglas Turn Signal Switch (Tilt Column), p. 4....15
Power Source, p. 5....16
1.4. ENGINE SYSTEMS (CHAPTER 4)....17
Charging System (12V) Delco 100, 130, 145 Amp and L/N 105, 130, 145, 180 Amp, p. 1....17
Cranking System (12V), Optional Starter Overcrank Protection With VT 365, p. 2....18
Cranking System (12V), Optional Starter Overcrank Protection With I6, p. 3....19
Fan Solenoid Control, p. 4....20
1.5. GAUGES (CHAPTER 5)....21
Fuel Level Gauge, p. 1....21
Speedometer, Tachometer, Voltmeter, Engine Oil Pressure, Water Temperature, p. 2....22
Transmission Oil Temperature Gauge, p. 3....23
1.6. WARNING LIGHTS (CHAPTER 6)....24
Low Oil Pressure/High Water Temp./Low Coolant Level/Brake Warning (Air) Lights and Alarms, p. 1....24
Low Oil Pressure/High Water Temperature/Low Coolant Level/Brake Warning (Hyd.) Lights and Alarms, p. 2....25
Diagnostic/Programming Connector and Warning Light System, p. 3....26
Wait-to-Start, Engine Warning, Fuel Filter, Change Oil, WIF and MSM Wiring, p. 4....27
1.7. CHASSIS ACCESSORIES (CHAPTER 7)....28
Air Dryer (AD-9) With Air Brakes, p. 1....28
WTEC Antilock Brakes, p. 2....29
Antilock Brakes (4–Channel) — Air, p. 3....30
Allison WTEC Transmission, p. 4....31
Allison WTEC Transmission Gen 4 (Cont.), p. 5....32
Allison WTEC Transmission Gen 4 (Cont.), p. 6....33
Allison WTEC Transmission Gen 4 (Cont.), p. 7....34
Allison WTEC Transmission Gen 4 (Cont.), p. 8....35
Allison WTEC Transmission Gen 4 (Cont.), p. 9....36

Transmission Retarder Controls With I6 — Allison WTEC Trans. (Air Verified), p. 10…37
Transmission Retarder Controls With I6 — Allison WTEC Trans. Gen 4 (Cont.), p. 11…38
Drain Valve Wiring, p. 12…39
Fuel Filter Wiring System, p. 13…40
Antilock Brake System — Hydraulic, p. 14…41
Antilock Brakes (4–Channel) W/Air Brakes W/Allison 2000 ICT Xmsn, p. 15…42
Allison 2000 (LCT) Transmission, p. 16…43
Allison 1000/2000 Gen 4 Transmission, p. 17…44
Allison WTEC Transmission Gen 4, p. 18…45
Allison 1000/2000 Transmission Gen 4, p. 19…46
Antilock Brake System — Hydraulic Gen 4, p. 20…47
Antilock Brake System — Hydraulic (Cont.), p. 21…48
Brake System — Hydraulic, p. 22…49
Fuller Manual Transmission, p. 23…50
Park Brake Lift Interlock, p. 24…51
ABS6 — Bendix Air, p. 25…52
ABS6 — Bendix Air, p. 26…53
Park Brake and Lift Interlock, p. 27…54
Allison WTEC XMSN Gen 4 for Clean Power, p. 28…55
Allison 1000/2000 XMSN Gen 4 for Clean Power, p. 29…56
1.8. LIGHT SYSTEMS (CHAPTER 8)…57
Back-Up Light System Allison Gen 4, p. 1…57
Headlight System With Douglas Turn Signal Switch (Tilt Column), p. 2…58
Headlight System With International Turn Signal Switch (Stationary Column), p. 3…59
Daytime Running Lights With Douglas or International Turn Signal Switch, p. 4…60
Stoplight Switch With Air Brakes, p. 5…61
Panel Lights, p. 6…62
Daytime Running Lights with Engine Running Only, p. 7…63
Back-Up Light System, p. 8…64
Daytime Running Lights with Engine Running Only, p. 9…65
Daytime Running Lights with Engine Running Only, p. 10…66
1.9. ELECTRONIC ENGINES (CHAPTER 9)…67
Electronic Engine Controls, p. 1…67
Accelerator, BAP and ATS Systems, p. 2…68
Cruise Control and Electronic Hand Throttle System, p. 3…69
Control Box System with Allison 3060 and 2000, p. 4…70
Control Box System (Cont.), p. 5…71
Engine Brakes with WTEC III Transmission and I6 Engine, p. 6…72
Exhaust Brakes with WTEC III Transmission and I6 Engine, p. 7…73
Control Box System with Fuller Manual Transmission, p. 8…74
Electronic Engine Controls for Clean Power, p. 9…75
Control Box System for Clean Power Allison Gen 4, p. 10…76
Increase Engine Idle Speed with AC On, p. 11…77
1.10. CONNECTOR COMPOSITES (CHAPTER 10)…78
Fuse Block Connections, p. 1…78
Fuse Block Connections (Cont.), p. 2…79
Fuse/Circuit Breaker Chart, p. 3…80
Connector Composites (1A), (1B), (1C), p. 4…81
Connector Composite (2A), p. 5…82
Connector Composite (2F), p. 5A…83
Connector Composites (4), (6), (7), (8), (9), (11), (12), p. 6…84
Connector Composites (13), (20), (22), (23), (25), p. 7…85
Connector Composites (37), (37F), (42), (43), (43M), p. 8…86

Connector Composites (64), (69), (74F), p. 8A.....87
Connector Composites (75), (78), (79), (80), (82), (86), p. 9.....88
Connector Composites (88), (89), (90), (91), (94), (100), p. 10.....89
Connector Composites (101), (165), (169), (170), p. 11.....90
Connector Composites (209), (211), p. 12.....91
Connector Composites (218), (258), (279), (283), (284), (288), p. 13.....92
Connector Composites (288), (288X1), p. 13A.....93
Connector Composites (289), (290), (291), (292), p. 14.....94
Connector Composites (292), (293), (295), (297), (350), p. 14A.....95
Connector Composites (350X2), (351), (352), (353), p. 15.....96
Connector Composites (354), (373), (374), (377), p. 16.....97
Connector Composites (382), (384), (391), (392), p. 17.....98
Connector Composites (412), (420), (426), (523), p. 18.....99
Connector Composite (523), p. 18A.....100
Connector Composite (523), p. 18B.....101
Connector Composites (569), (644F), (644M), (918), (919), p. 19.....102
Connector Composites (922), (922A), (925), (926), (1133), p. 20.....103
Connector Composites (1601F), (1601M), (1707), (1707C), (3043), p. 21.....104
Connector Composites (1708), (1709), (1850), p. 21A.....105
Connector Composites (3114), (3115), (3116), (3117), (3118), (3119), p. 22.....106
Connector Composites (6000F), (6000M), p. 23.....107
Connector Composites (6005), (6006), p. 24.....108
Connector Composites (6010), (6011), p. 24A.....109
Connector Composites (6012), (6012C), (6020), p. 25.....110
Connector Composites (6021), (6120), p. 26.....111
Connector Composites (6200), (6201), (6202), (6305), (6308), (6309), p. 26A.....112
Connector Composites (6310), (6311), (6323), p. 27.....113
Connector Composites (6323F), (6323M), (6331), p. 27A.....114
Connector Composites (6400), (6405), (6406), p. 27B.....115
Connector Composites (6702), (6703), (6704), p. 28.....116
Connector Composites (6705), (6706), (6708), (6741), p. 28A.....117
Connector Composites (7100F), (7100M), p. 29.....118
Connector Composites (7101F), (7101M), p. 29A.....119
Connector Composites (7104F), (7104M), (7105), (7106), p. 29B.....120
Connector Composite (7150), p. 29C.....121
Connector Composites (7200), (7202), p. 30.....122
Connector Composites (7203), (7204), p. 30A.....123
Connector Composites (7250), (7300), p. 31.....124
Connector Composite (7303), p. 31A.....125
Connector Composite (7304), p. 32.....126
Connector Composite (7305), p. 32A.....127
Connector Composites (7306), (7350), p. 32B.....128
Connector Composites (7505), (7600), (7603), p. 33.....129
Connector Composites (7603), (7604), (7605), (7607), p. 33A.....130
Connector Composites (7806), (7807), p. 33B.....131
Connector Composites (7808), (7966), p. 34.....132
Connector Composite (7966), p. 34A.....133
Connector Composites (7980), (7981), (7982), (7983), p. 34B.....134
Connector Composites (7999), (9254), (9255), p. 35.....135
Connector Composites (9258), (9260F), (9260M), p. 35A.....136
Connector Composites (9261F), (9261M), (9500), p. 35B.....137
Connector Composites (9501), (9502), (9503), p. 35C.....138
Connector Composites (9504), (9505), (9506), p. 35D.....139

Connector Composites (9507), (9508), p. 35E.....140
Connector Composites (9509), (9510), (9511), p. 35F.....141
Connector Composites (9550), (9850), p. 35G.....142
Connector Composite (9850), p. 35H.....143
Connector Composite (9851), p. 36.....144
Connector Composite (9875), p. 36A.....145
Lamp Bulb Chart and Body Builder Information, p. 37.....146

2. ELECTRICAL CIRCUIT DIAGRAMS — FE 300.....147
2.1. INSTRUCTIONS AND CHARTS, (CHAPTER 1).....147
Circuit Diagram Instructions, p. 1.....147
Circuit Diagram Instructions, p. 2.....148
Schematic Symbols, p. 3.....149
Schematic Symbols, p. 4.....150
International Circuit Number Identification, p. 5.....151
International Circuit Number Identification, p. 6.....152
2.2. POWER DISTRIBUTION (CHAPTER 2).....153
Battery, p. 1.....153
Ground, p. 2.....154
Ignition — Key Switch, p. 3.....155
Battery — ABS6, p. 4.....156
Key Switch — ABS6, p. 5.....157
2.3. CAB ACCESSORIES (CHAPTER 3).....158
Horn, p. 1.....158
2.4. ENGINE SYSTEMS (CHAPTER 4).....159
Ammeter (Shunt), p. 1.....159
Charging System, p. 2.....160
Cranking System, p. 3.....161
Horton Fan with Electric Solenoid Control, p. 4.....162
2.5. GAUGES (CHAPTER 5).....163
Fuel Level Gauge, p. 1.....163
Speedometer, Tachometer, Voltmeter, Engine Oil Pressure, Water Temperature, p. 2.....164
Transmission Temperature Gauge, p. 3.....165
2.6. WARNING LIGHTS (CHAPTER 6).....166
Low Oil Pressure/High Water Temp./Low Coolant Level/Brake Warning (Air) Lights and Alarm, p. 1.....166
Low Oil Pressure/High Water Temperature with Hydraulic Brakes, p. 2.....167
Diagnostic/Programmable Connector, p. 3.....168
Parking Brake and Warning Lights with Air Brakes, p. 4.....169
Electronic Controls: MSM Module Control System, p. 5.....170
2.7. CHASSIS ACCESSORIES (CHAPTER 7).....171
Heated Fuel Filter, p. 1.....171
Air Dryer/Drain Valve, p. 2.....172
Body Builder Connections, p. 3.....173
Brake System Hydraulic, p. 4.....174
Stoplight Switch (With Air Brake), p. 5.....175
Antilock Brakes (4–Channel) Allison WTEC III w/ I6 EGR and Air Brakes, p. 6.....176
Antilock Brakes (4–Channel) With AT, MT, WTEC III Allison Trans., p. 7.....177
Allison WTEC III Transmission With I6 EGR, p. 9.....178
Allison WTEC III Transmission Electronic With I6 EGR (Cont.), p. 10.....179
Allison WTEC III Automatic Transmission, p. 11.....180
J1939 Datalink w/ Allison WTEC III Transmission, p. 12.....181

Allison WTEC III Transmission (Electronic) Spare Input/Outputs, p. 13.....182
Allison WTEC III Transmission (Electronic) Spare Input/Outputs (Cont.), p. 14.....183
Antilock Brake System — Hydraulic, p. 15.....184
Antilock Brake System — Hydraulic (Cont.), p. 16.....185
Antilock Brakes (4–Channel) W/ I6 EGR and W/Air Brakes W/Allison 2000 LCT Xmsn, p. 17.....186
Allison 2000 (LCT) Transmission W/ I6 EGR, p. 18.....187
Allison 2000 (LCT) Transmission W/ I6 EGR, p. 19.....188
J1939 Datalink with Allison 2000 (LCT) Transmission, p. 20.....189
Allison 2000 (LCT) Transmission, p. 21.....190
J1708 Datalink with Allison 3000 (WTEC) Transmission, p. 22.....191
J1708 Datalink with Allison 2000 (LCT) Transmission, p. 23.....192
Park Brake Lift Interlock, p. 24.....193
Park Brake Lift Interlock, p. 25.....194
ABS6 — Bendix Air, p. 26.....195
ABS6 — Bendix Air, p. 27.....196
J1939 Datalink W/Allison 3000 Series (WTEC) Transmission, ABS6 Bendix Air, p. 28.....197
Allison 1000/2000 Series (LCT) Gen 4 Transmission W/I6 Engine, p. 29.....198
Allison 1000/2000 Series Gen 4 Transmission W/I6 Engine, p. 30.....199
Allison 1000/2000 Series Gen 4 Transmission W/I6 Engine, p. 31.....200
Allison 1000/2000 Series Gen 4 Transmission, p. 32.....201
Allison Automatic 3000/4000 Series Gen 4 Transmission, p. 33.....202
Allison 3000/4000 Series Gen 4 Transmission W/I6 EGR, p. 34.....203
Allison 3000/4000 Series Gen 4 (Electronic) Spare Input/Outputs, p. 35.....204
Allison 3000/4000 Series Gen 4 (Electronic) W/ I6 Engine, p. 36.....205
J1939 Datalink W/Allison Gen 4 Series WTEC Transmission, ABS 6 Bendix Air, p. 37.....206
Air Powered Park Brake with Hydraulic Brakes, p. 38.....207
2.8. LIGHT SYSTEMS (CHAPTER 8).....208
Back-Up Light System, p. 1.....208
Daytime Running Lights (USA), p. 2.....209
Headlight System With Douglas Turn Signal Switch (Tilt Column), p. 3.....210
Panel Lights, p. 4.....211
Turn Signal System, p. 5.....212
Back–Up Light System, p. 6.....213
Daytime Running Lights with Engine Running Only, p. 7.....214
Daytime Running Lights with Engine Running Only, p. 8.....215
2.9. ELECTRONIC CONTROLS (CHAPTER 9).....216
ECM Power/Ground Systems, p. 1.....216
Accelerator, BAP and ATS Systems, p. 2.....217
Cruise Control Hand Throttle System, p. 3.....218
Coolant Sensor Module, p. 4.....219
Exh/Compression Brake and Exh Brake Only, p. 5.....220
Increase Engine Idle Speed with AC On, p. 6.....221
2.10. CONNECTOR COMPOSITES (CHAPTER 10).....222
Junction Points — J1, J2, J3, J5, J6, J7, J8, 6345, p. 1.....222
Fuse Block Connections, p. 2.....223
Fuse Block Connections, p. 3.....224
Connector Composites (2), (2A), p. 4.....225
Connector Composites (7), (8), (9), (10), (11), (12), p. 5.....226
Connector Composites (13), (15), (15A), p. 6.....227
Connector Composites (20), (22), (23), (26), (27), p. 7.....228

Connector Composites (32), (37), (38), (40), (41), p. 8.....229
Connector Composites (41F), (44), (44M), (45), (46), (51), (64), (76), p. 9.....230
Connector Composites (80), (81), (82), (83A), p. 10.....231
Connector Composites (83), (85), (49), (87), (88), p. 11.....232
Connector Composites (89), (90), (91), (92), (93), (94), (165), (168), p. 12.....233
Connector Composites (168), (169), (170), (209), (218), (224), (258), p. 13.....234
Connector Composites (261), (279), (283), (284), p. 14.....235
Connector Composites (288), (289), (290), (291), (292), (293), (295), (297), (303F), (304), p. 15.....236
Connector Composites (323), (329), p. 16.....237
Connector Composites (350), (351), (352), (353), (354), p. 17.....238
Connector Composites (373), (374), p. 18.....239
Connector Composites (382), (384), (387M), (388F), (391), (392), p. 19.....240
Connector Composites (396G), (396), (406), (420), (422), (426/A), p. 20.....241
Connector Composites (428), (433), (434), (438), (450), (451), p. 21.....242
Connector Composites (466), (499), (523), p. 22.....243
Connector Composites (569), (3084R), (571A/646A), (3084B), (6012/646), (574), p. 23.....244
Connector Composites (637), (639), p. 24.....245
Connector Composites (644F), (646), (748), (749), p. 25.....246
Connector Composites (750), (832), (836), (1002), (1133), p. 26.....247
Connector Composites (3024), (3027), (3029), (3030), p. 27.....248
Connector Composites (3031), (3032), (3036), (3043), p. 28.....249
Connector Composites (3044), (3055/396A), p. 29.....250
Lamp Bulb Chart, p. 30.....251
Connector Composites (1272), (3025), (3111), p. 31.....252
Connector Composites (3111M), (6011), p. 32.....253
Connector Composites (6020), (6021), p. 33.....254
Connector Composites (6200), (6201), (6202), (6203), p. 33A.....255
Connector Composites (6323F), (6400), (6406), p. 34.....256
Connector Composites (6703), (6706), p. 35.....257
Connector Composites (7202), (7203), (7204), p. 36.....258
Fuse/Circuit Breaker Chart, p. 37.....259

1. ELECTRICAL CIRCUIT DIAGRAMS — RE 200, RE 300

1.1. INSTRUCTIONS AND CHARTS (CHAPTER 1)

International Circuit Identification Chart, p. 1

INTERNATIONAL TRUCK AND ENGINE CORPORATION

THIS PRINT IS PROVIDED ON A RESTRICTED BASIS AND IS NOT TO BE USED IN ANY WAY DETRIMENTAL TO THE INTEREST OF INTERNATIONAL TRUCK AND ENGINE CORPORATION.

ELECTRICAL CIRCUIT DIAGRAM CHAPTER 1

INSTRUCTIONS & CHARTS: NAVISTAR CIRCUIT IDENTIFICATION CHART

CIRCUIT NUMBER	DESCRIPTION - COLOR	CIRCUIT NUMBER	DESCRIPTION - COLOR
1	GENERATOR - FIELD - LIGHT BLUE	37	FUEL PUMP - TAN
2	GENERATOR - CHARGE - RED	38	
3	(+) & (-) ATA DATALINK/DIAGNOSTICS	39	AIR DRYER - GRAY
4		40	LOW AIR PRESSURE WARNING - GRAY
5	J1939 DATALINK	41	FRONT AXLE - GRAY
6		42	
7		43	POWER DIVIDER LOCK (PDL) - GRAY
8		44	PARK BRAKE WARNING - GRAY
9		45	ANTI-THEFT WARNING - LIGHT GREEN
10		46	POWER TAKE-OFF WARNING - GRAY
11	GROUND - WHITE	47	SPEEDOMETER - GRAY
12	ACCESSORY FEED - LIGHT BLUE	48	TACHOMETER - GRAY
13	IGNITION FEED - PINK	49	DIFFERENTIAL LOCK - GRAY
14	BATTERY FEED - RED	50	LIGHT SWITCH FEED - YELLOW
15	KEY SWITCH FEED - RED	51	DIMMER SWITCH - YELLOW
16		52	HEADLIGHT - HIGH BEAM - YELLOW
17	STARTER CONTROL - PINK	53	HEADLIGHT - LOW BEAM - YELLOW
18	GLOW PLUG/PRE-HEATER - PINK	54	PARKING/MARKER LIGHTS - BROWN
19	ENGINE SHUT-OFF - GRAY	55	TURN SIGNAL - ORANGE
20		56	TURN SIGNAL LIGHTS - LEFT - ORANGE
21		57	TURN SIGNAL LIGHTS - RIGHT - ORANGE
22		58	CLEARANCE AND IDENTIFICATION LIGHTS - BROWN
23	ENGINE COOLING - TAN	59	
24	ENGINE BRAKE GRAY	60	HAZZARD LIGHTS - ORANGE
25	PYROMETER - TAN	61	AIR SUSPENSION - GRAY
26	AMMETER - TAN	62	PANEL LIGHTS - DARK BLUE
27	VOLTMETER - TAN	63	COURTESY AND DOME LIGHTS - DARK BLUE
28	INSTRUMENT FEED - TAN	64	AUXILIARY LIGHTS - YELLOW
29	ENGINE WATER TEMPERATURE - TAN	65	5TH WHEEL/WORK LIGHT - ORANGE
30	ENGINE OIL TEMPERATURE - TAN	66	DAYTIME RUNNING LIGHTS - YELLOW
31	TRANSMISSION OIL TEMPERATURE - TAN	67	
32	AXLE OIL TEMPERATURE - TAN	68	TAIL LIGHTS - BROWN
33	ENGINE OIL LEVEL - TAN	69	LICENSE PLATE LIGHT - BROWN
34	WATER LEVEL - TAN	70	STOP LIGHTS - ORANGE
35	ENGINE OIL PRESSURE - TAN	71	BACK-UP LIGHTS - ORANGE
36	FUEL LEVEL - TAN	72	TRAILER AUXILIARY - ORANGE

CHK	DATE	CHANGE	REV	REFERENCE	DRAWN	NAME		
					GSC2	PB30500, PC30500, RE30030		
					RELEASE NO. 56878R	DATE 01JUL03	PART NO. AE08-54916	SHEET 01

Figure 1 International Circuit Identification Chart

International Circuit Identification Chart, p. 2

INTERNATIONAL TRUCK AND ENGINE CORPORATION

THIS PRINT IS PROVIDED ON A RESTRICTED BASIS AND IS NOT TO BE USED IN ANY WAY DETRIMENTAL TO THE INTEREST OF INTERNATIONAL TRUCK AND ELECTRICAL CIRCUIT DIAGRAM CHAPTER 1

INSTRUCTIONS & CHARTS: NAVISTAR CIRCUIT IDENTIFICATION CHART

CIRCUIT NUMBER	DESCRIPTION - COLOR	CIRCUIT NUMBER	DESCRIPTION - COLOR
73		87	WINDSHIELD WASHER - GRAY
74		88	CLOCK/HOURMETER - LIGHT GREEN
75	HEATER BLOWER MOTOR - LIGHT GREEN	89	
76	AUXILIARY FAN - LIGHT GREEN	90	HYDRAULIC BRAKE PUMP - GRAY
77	AIR CONDITIONER - LIGHT GREEN	91	INTERCOMMUNICATIONS - VIOLET
78	MIRRORS - HEATED * MOTORIZED - LIGHT GREEN	92	TRANSMISSION (ELECTRONIC) - TAN
79		93	AXLE SHIFT CONTROL - TAN
80		94	ANTILOCK BRAKES - GRAY
81	POWER DOOR LOCKS - LIGHT GREEN	95	EXHAUST EMISSION - TAN
82	WINDSHIELD WIPERS - GRAY	96	SNOW PLOW LIGHTS - YELLOW
83	POWER WINDOW - LIGHT GREEN	97	CRUISE CONTROL AND ELECTRONIC ENGINE - VIOLET
84	CIGAR LIGHTER - LIGHT GREEN	98	DATA LINK AND DIAGNOSTICS - BLACK
85	HORN - ELECTRIC - GRAY	99	THROTTLE POSITION SENSOR - VIOLET
86	RADIO - ENTERTAINMENT - LIGHT GREEN		

* NOTE:

NOT ALL CIRCUITS MAY BE USED.

COLORS ABOVE ARE NEW STD COLORS FOR MAJOR HARNESSES.

CHK	DATE	CHANGE	REV	REFERENCE	DRAWN	NAME		
					GSC2	PB30500, PC30500, RE30030		
					RELEASE NO. 56878R	DATE 01JUL03	PART NO. AE08-54916	SHEET 02

Figure 2 International Circuit Identification Chart

Circuit Diagram Instructions, p. 3

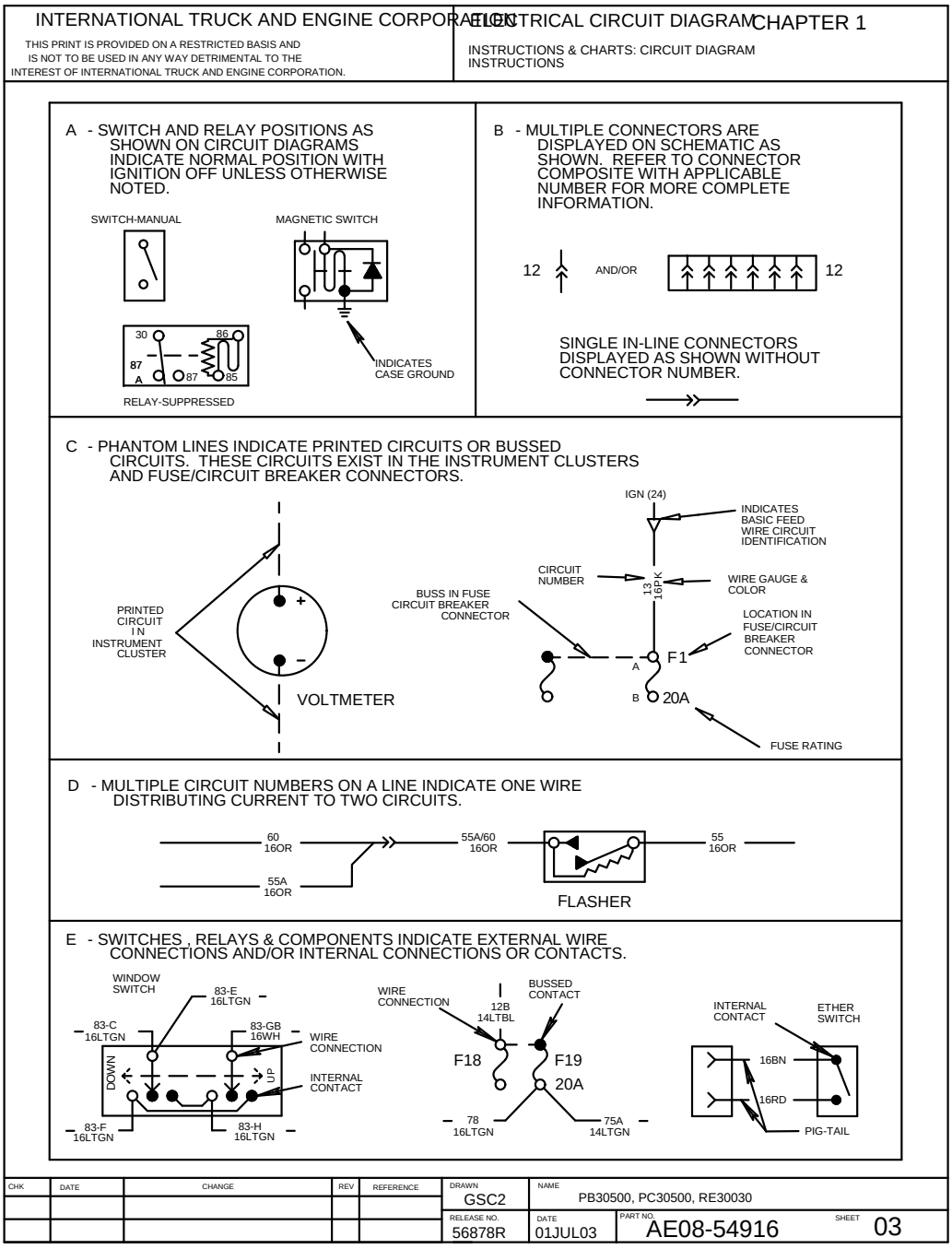

Figure 3 Circuit Diagram Instructions

Circuit Diagram Instructions, p. 4

INTERNATIONAL TRUCK AND ENGINE CORPORATION

THIS PRINT IS PROVIDED ON A RESTRICTED BASIS AND IS NOT TO BE USED IN ANY WAY DETRIMENTAL TO THE INTEREST OF INTERNATIONAL TRUCK AND ENGINE CORPORATION.

ELECTRICAL CIRCUIT DIAGRAM CHAPTER 1

INSTRUCTIONS & CHARTS: CIRCUIT DIAGRAM INSTRUCTIONS

F - JUNCTIONS ARE USED TO IDENTIFY MULTIPLE CONNECTIONS WITH A COMMON FEED OR GROUND. THE JUNCTION MAY BE A STUD OR A CONNECTOR WITH ALL CIRCUITS CONNECTED INTERNALLY BY BUS BAR.

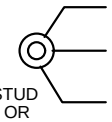

STUD OR ADAPTER

BUS ADAPTER

GROUND JUNCTION

THIS VEHICLE USES BUSSED CONNECTORS AND ARE REFERRED TO AS ADAPTERS - GROUND, FEED, IGNITION, ACCESSORY OR BATTERY.

G - CIRCUIT 11 DENOTES ANY COMMON GROUND, (MORE THAN ONE CIRCUIT). ANY DEDICATE GROUND CIRCUIT IS IDENTIFIED WITH THAT PARTICULAR SYSTEM CIRCUIT NUMBER. (E.G CIRCUIT 97 CRUISE CONTROL, IS IDENTIFIED PER EXAMPLE).

NOTE: FOR CIRCUIT DESCRIPTION OTHER THAN GROUNDS, NEITHER THE LETTER G OR THE COLOR WHITE WILL BE USED.

GROUND CIRCUITS ARE DESCRIBED THUS:

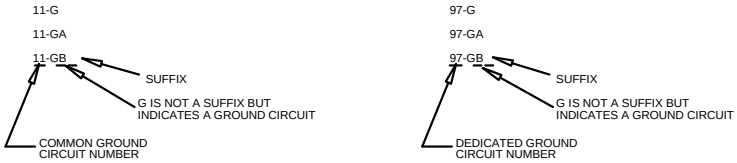

H - ABBREVIATIONS: COLOR,NOUN AND ENGINE

COLOR ABBREVIATION

AQ - AQUA
BK - BLACK
BL - BLUE
BN - BROWN
DK GN - DARK GREEN
GD - GOLD
GY - GRAY
GN - GREEN
LT BL - LIGHT BLUE
LT GN - LIGHT GREEN
OR - ORANGE
PK - PINK
PL - PURPLE
RD - RED
SIL - SILVER
TN - TAN
VT - VIOLET
WH - WHITE
YL - YELLOW

NOUN ABBREVIATION

A, ACC — ACCESSORY
AC - AIR CONDITIONER
AUX - AUXILIARY
AWG - AMERICAN WIRE GAUGE
B, BAT — BATTERY
CONN - CONNECTION OR CONNECTOR
DRL - DAYTIME RUNNING LIGHTS
ENG - ENGINE
FL - FUSIBLE LINK
FWD - FORWARD
GA - GAUGE
G, GND — GROUND
I, IGN — IGNITION
IND - INDICATOR
L - LEFT
LT - LIGHT
N/ - NOT WITH
OPT - OPTIONAL
R - RIGHT
S - START OR SENDER
THERMO - THERMOSTAT
W/ - WITH
W/O - WITHOUT

CHK	DATE	CHANGE	REV	REFERENCE	DRAWN GSC2	NAME PB30500, PC30500, RE30300		
					RELEASE NO. 56878R	DATE 01JUL03	PART NO. AE08-54916	SHEET 04

Figure 4 Circuit Diagram Instructions

Schematic Symbols, p. 5

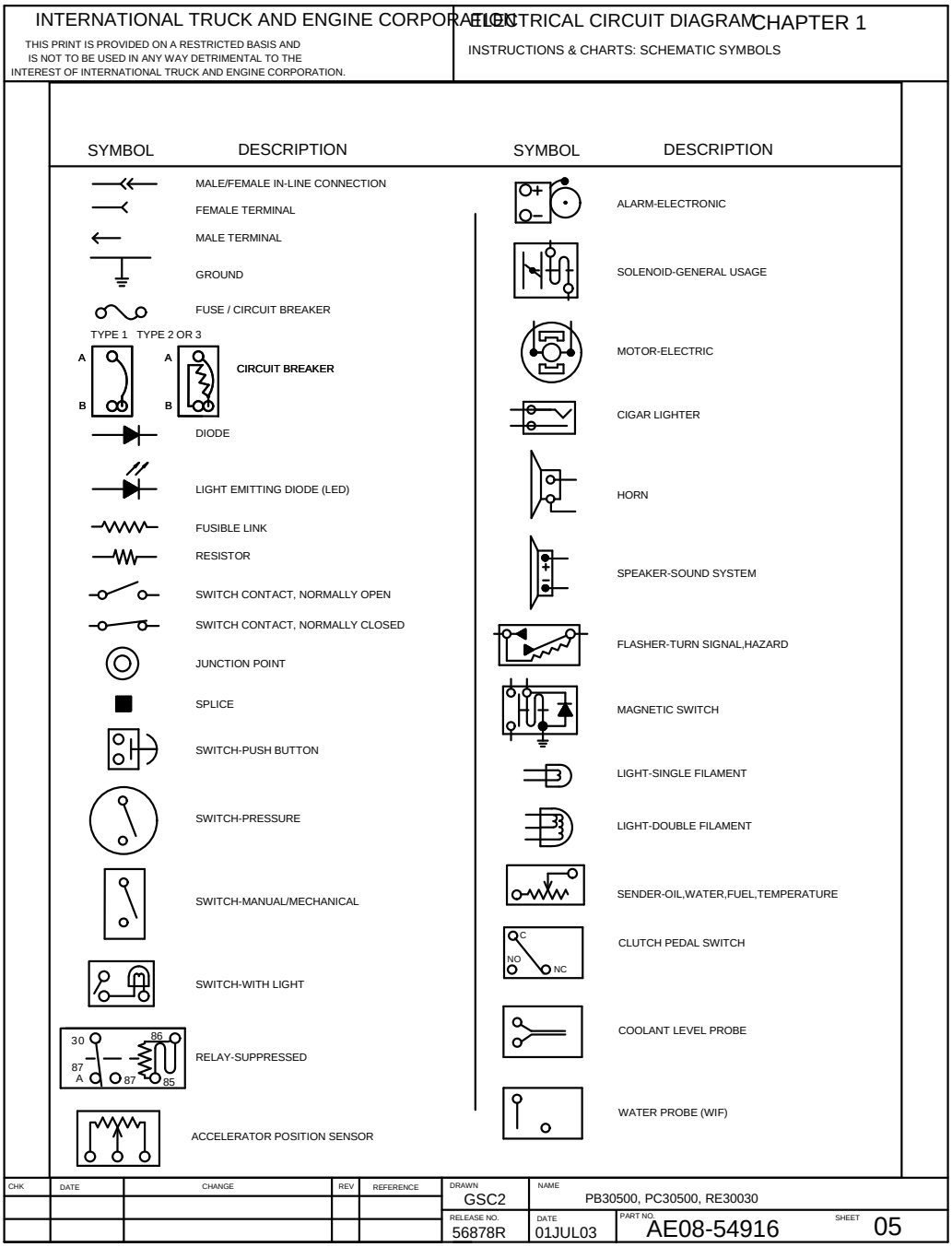

Figure 5 Schematic Symbols

Relay Pinout, Function Data, and Sealed Relay, p. 6

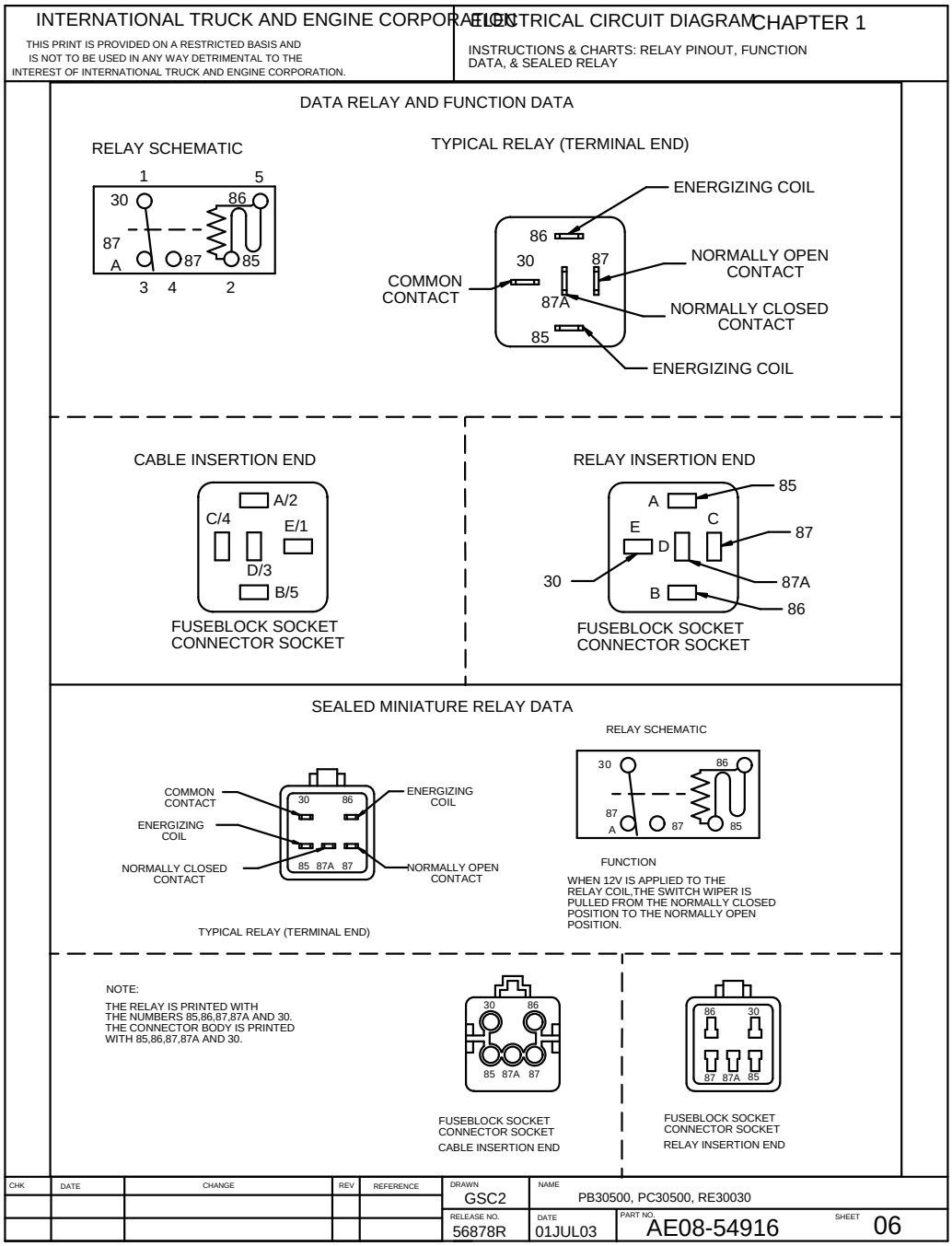

Figure 6 Relay Pinout, Function Data, and Sealed Relay

1.2. 12 VOLT POWER DISTRIBUTION (CHAPTER 2)

Battery/Alternator With VT 365, p. 1

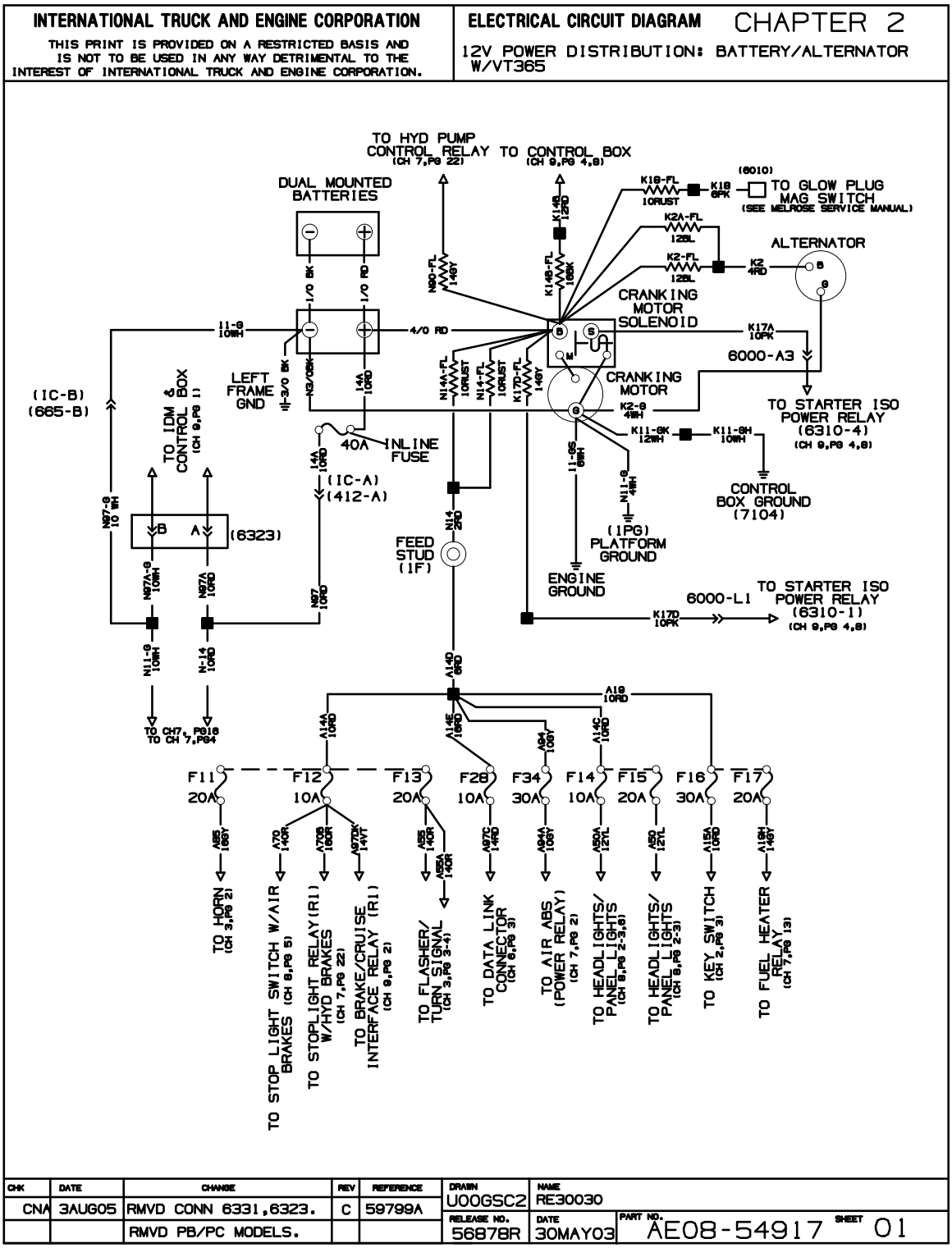

Figure 7 Battery/Alternator With VT 365

Battery/Alternator With I6, p. 2

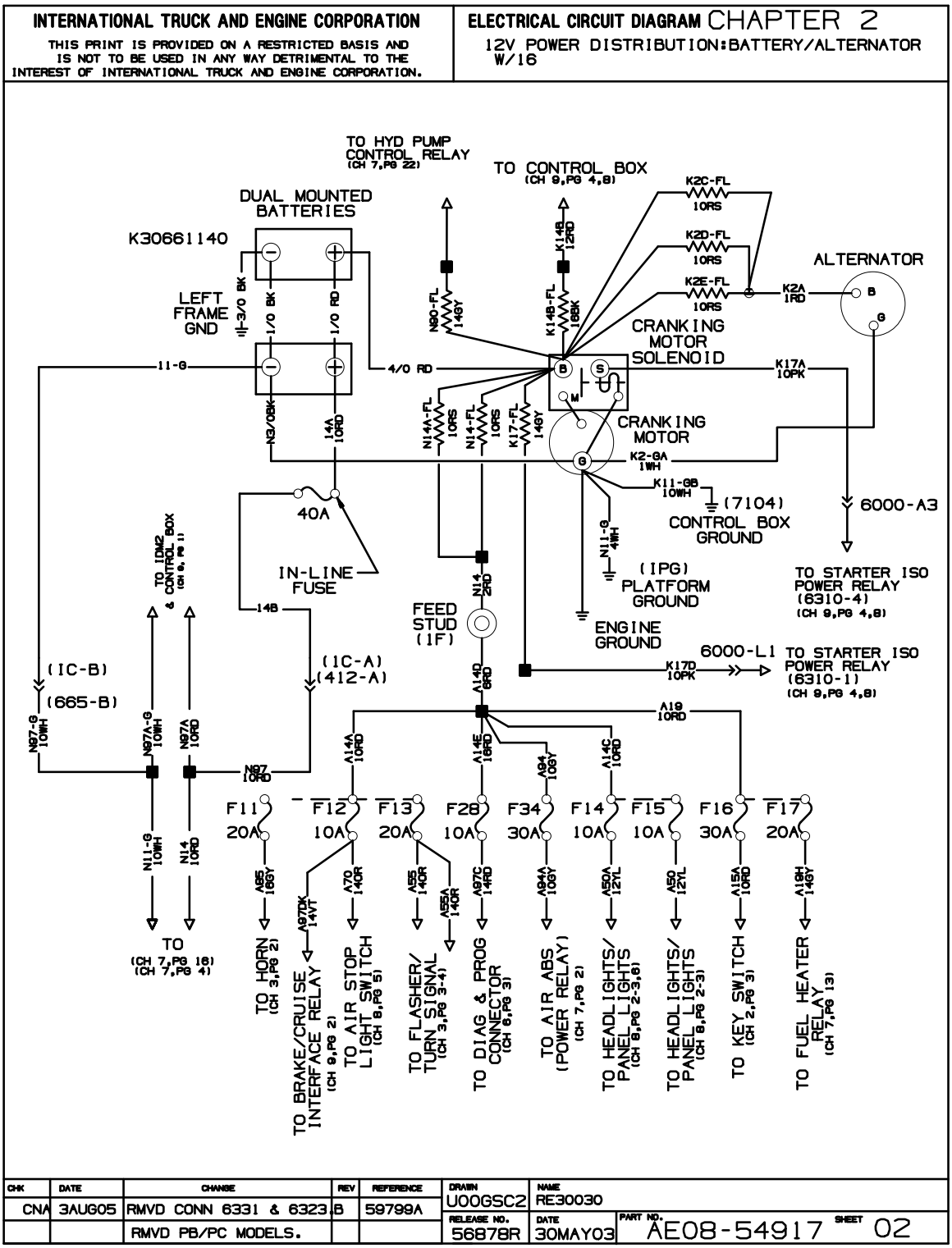

Figure 8 Battery/Alternator With I6

Key Switch, p. 3

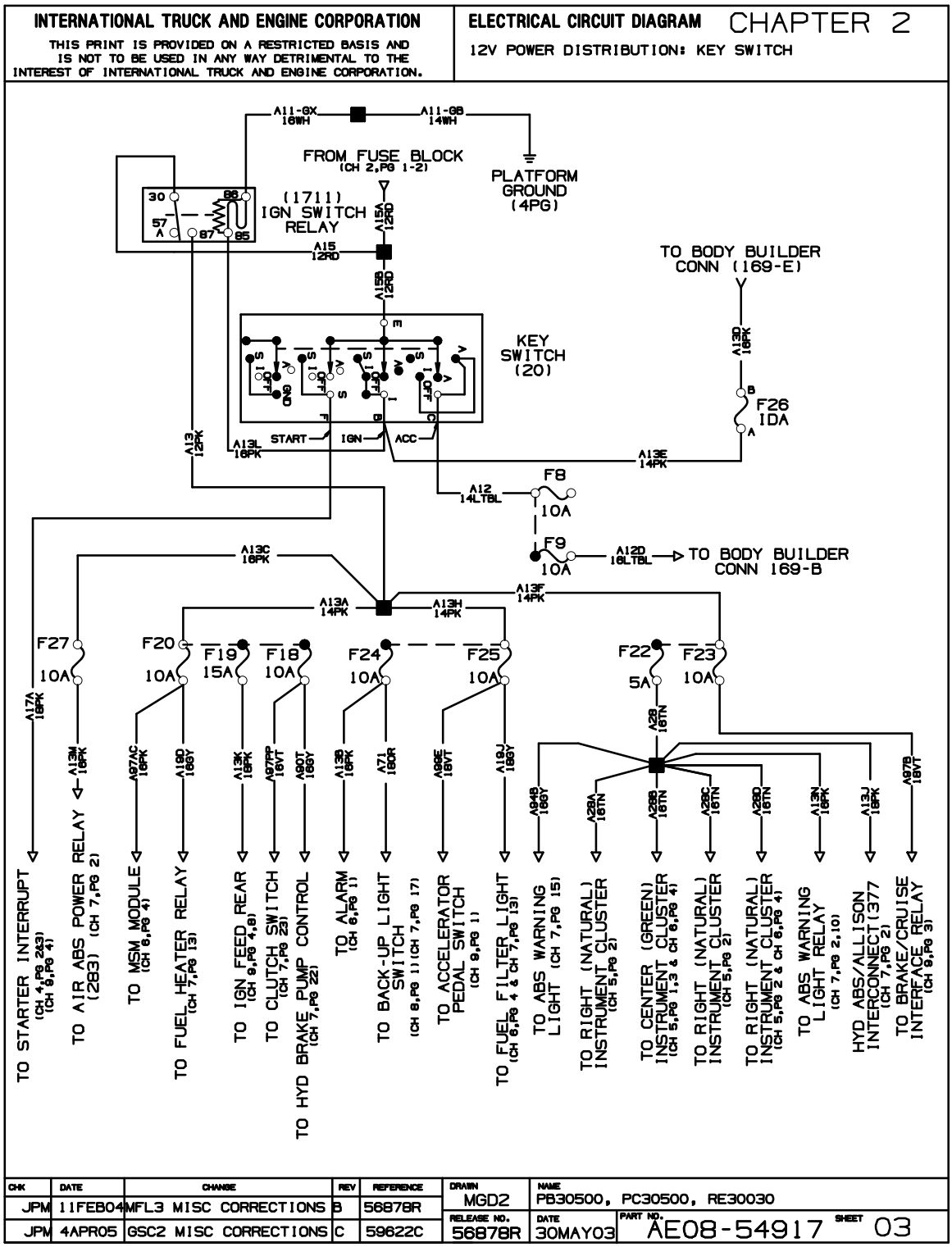

Figure 9 Key Switch

Battery/Alternator W/VT 365 for Clean Power, p. 4

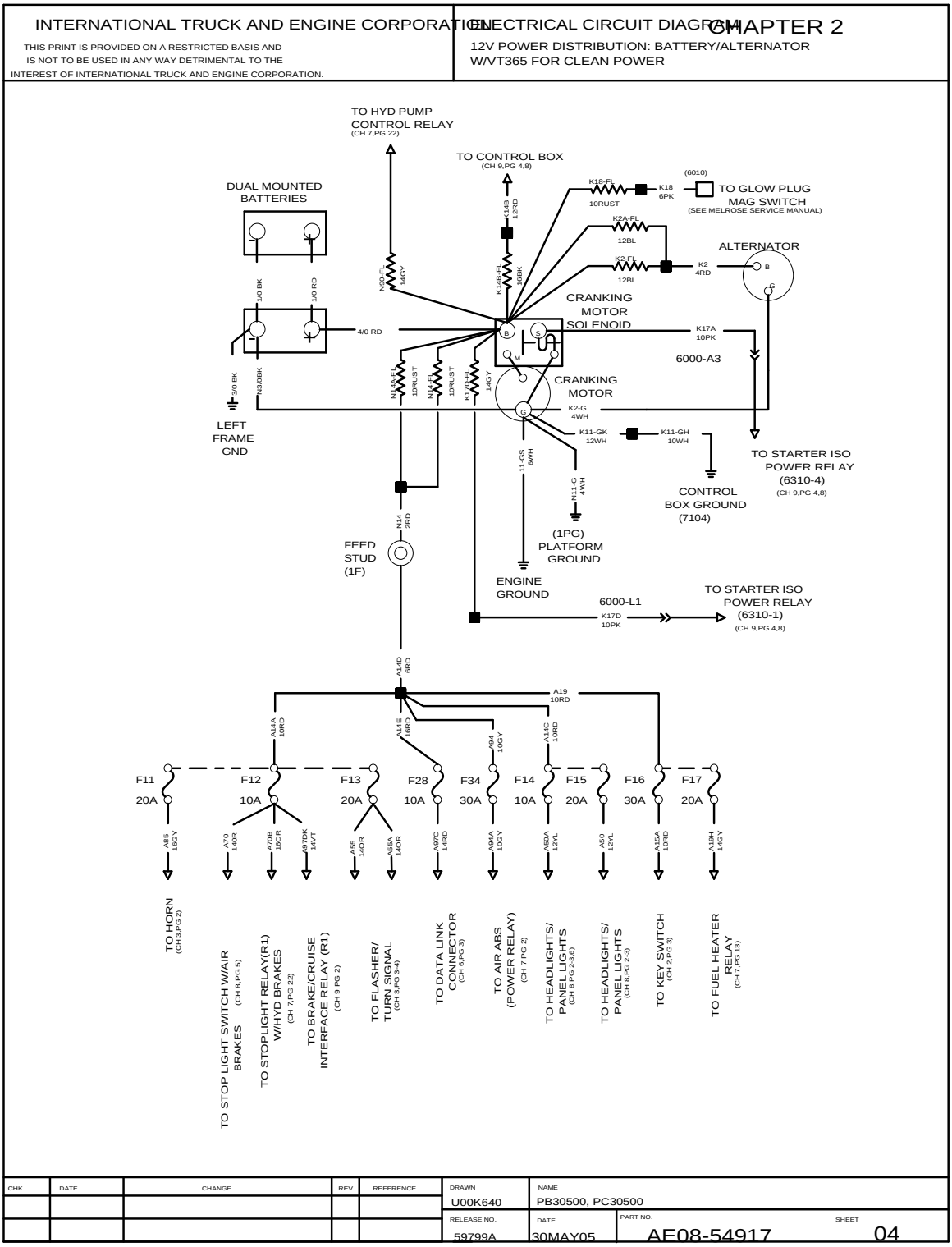

Figure 10 Battery/Alternator W/VT 365 for Clean Power

Battery/Alternator W/I6 for Clean Power, p. 5

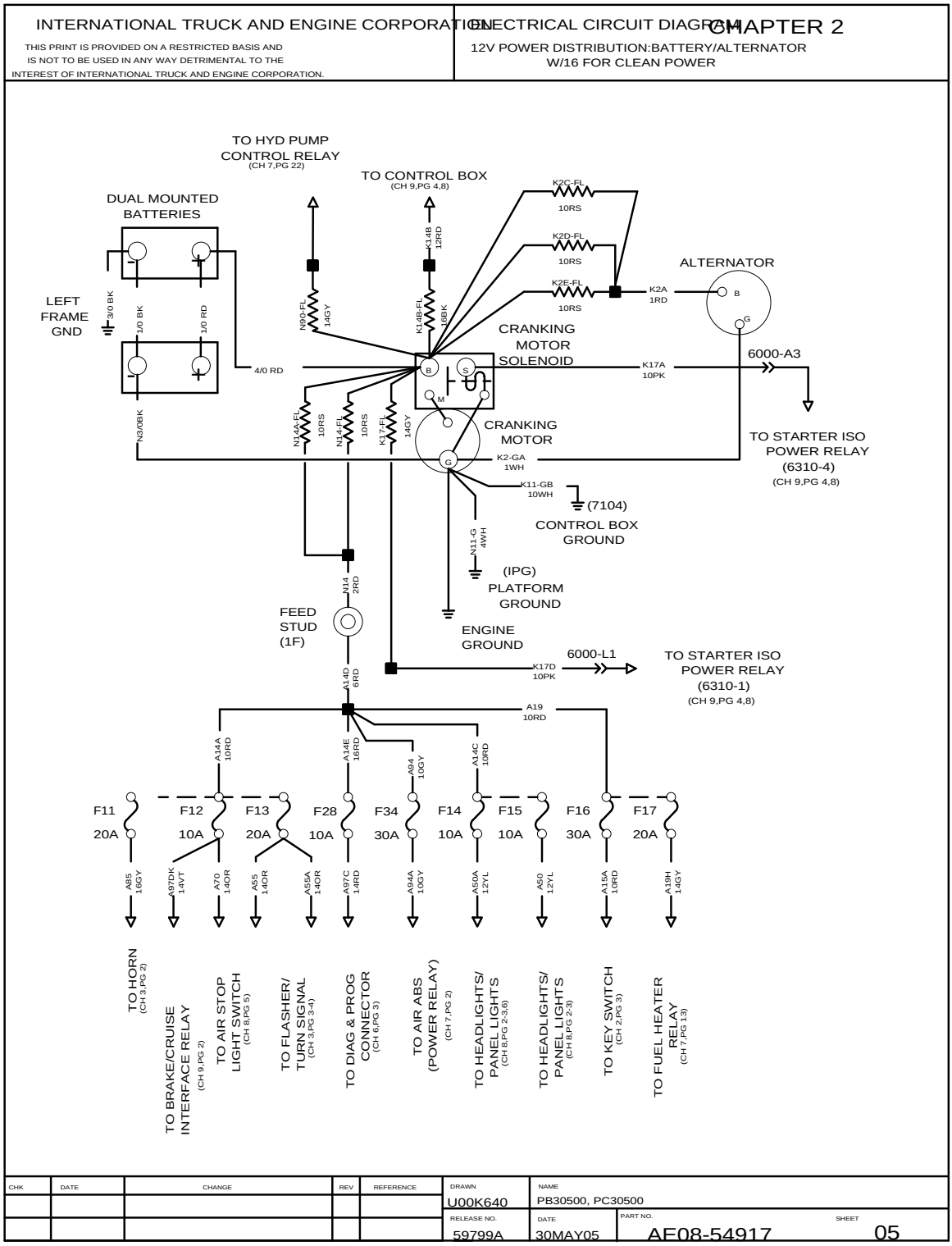

Figure 11 Battery/Alternator W/I6 for Clean Power

1.3. CAB ACCESSORIES (CHAPTER 3)

Ammeter, p. 1

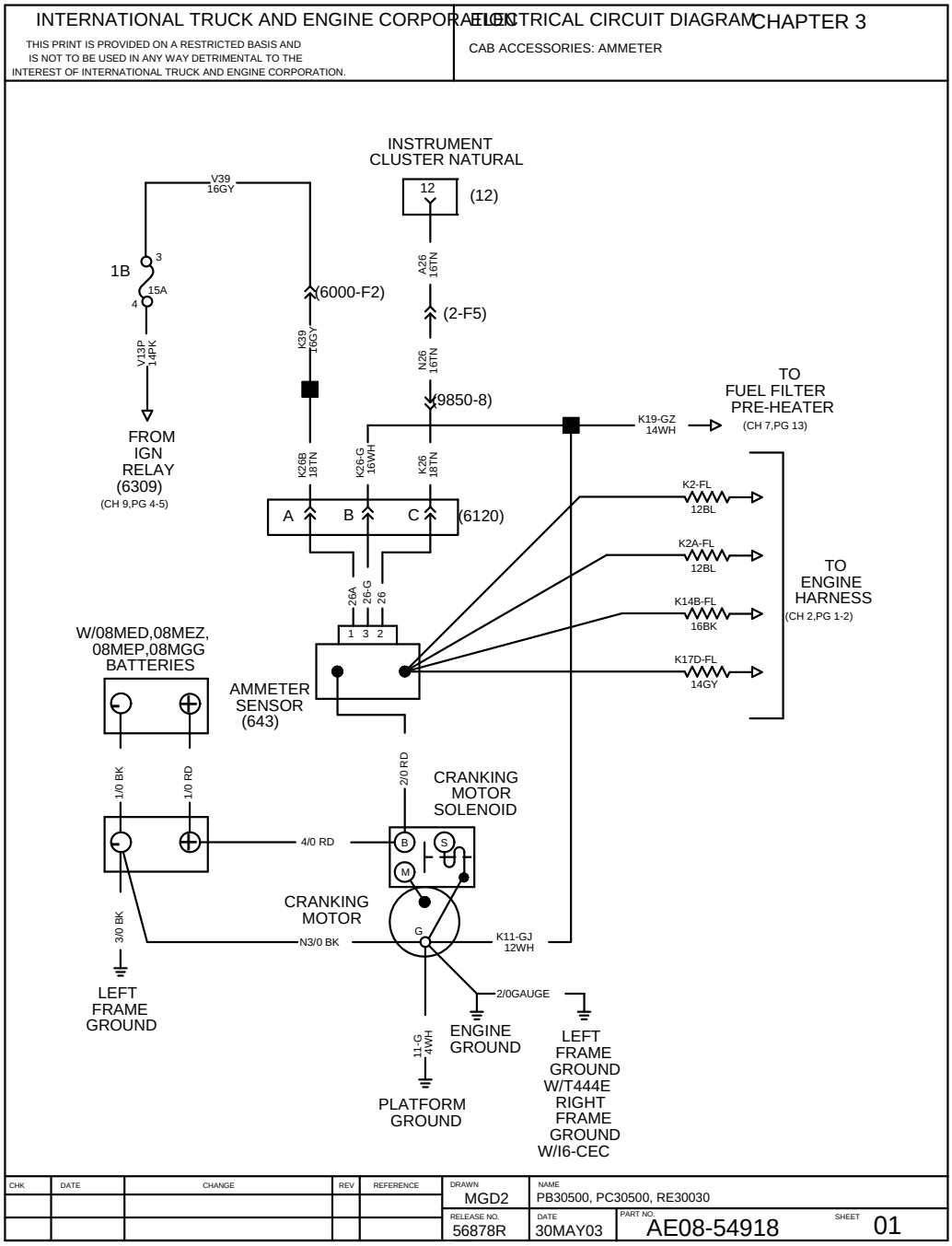

Figure 12 Ammeter

Horn, p. 2

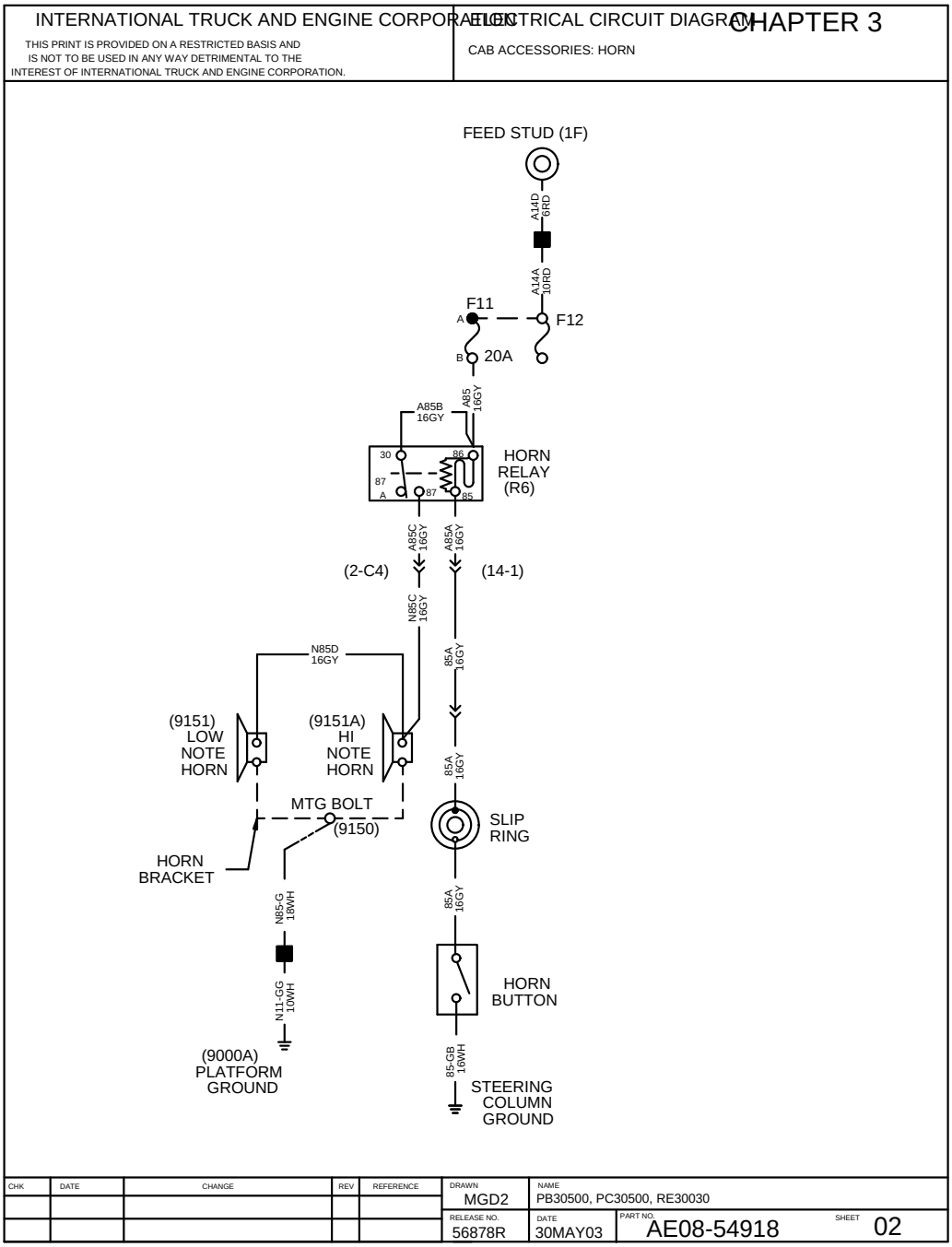

Figure 13 Horn

Turn Signals, International Turn Signal Switch (Stationary Column), p. 3

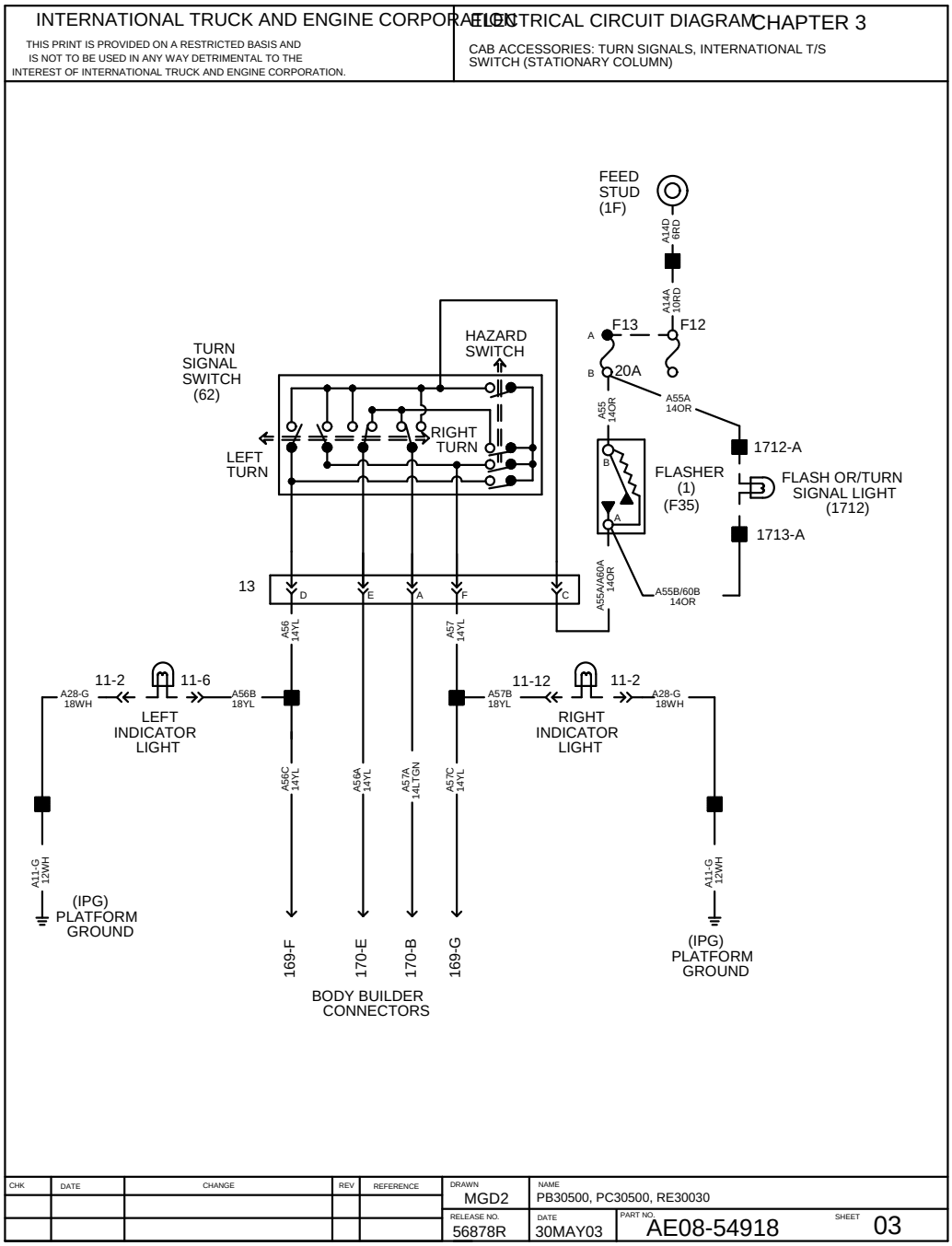

Figure 14 Turn Signals, International Turn Signal Switch (Stationary Column)

Turn Signals, Douglas Turn Signal Switch (Tilt Column), p. 4

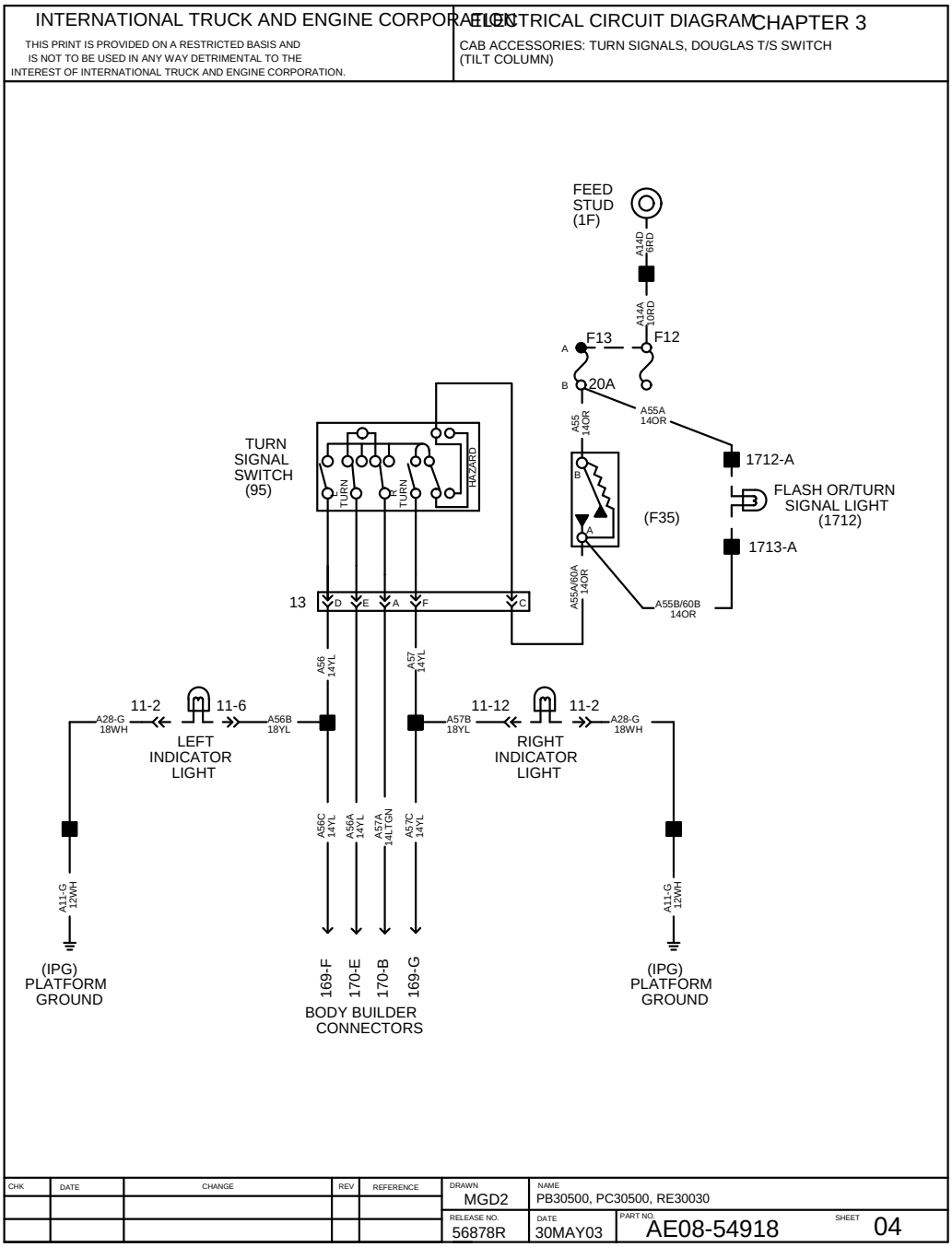

Figure 15 Turn Signals, Douglas Turn Signal Switch (Tilt Column)

Power Source, p. 5

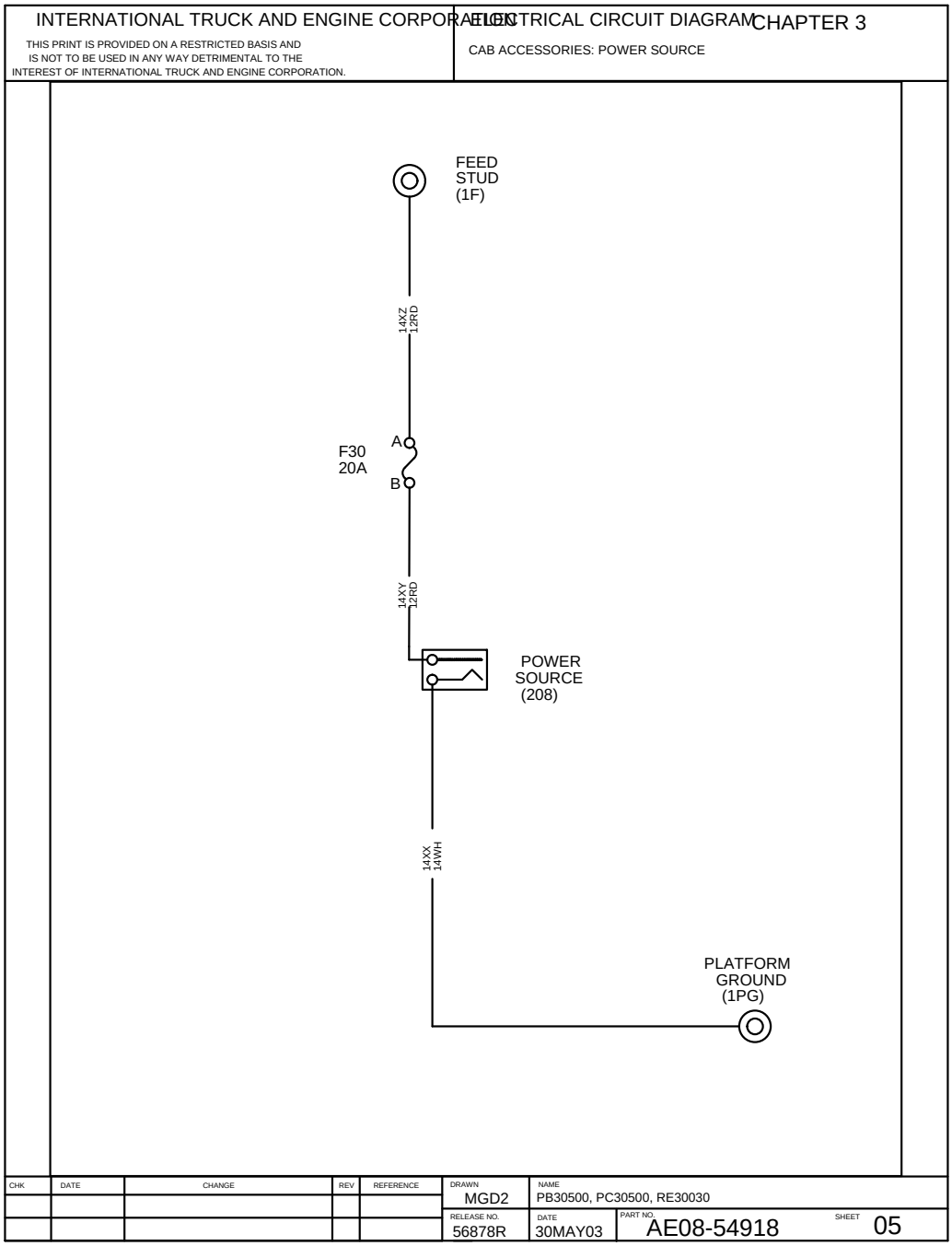

Figure 16 Power Source

1.4. ENGINE SYSTEMS (CHAPTER 4)

Charging System (12V) Delco 100, 130, 145 Amp and L/N 105, 130, 145, 180 Amp, p. 1

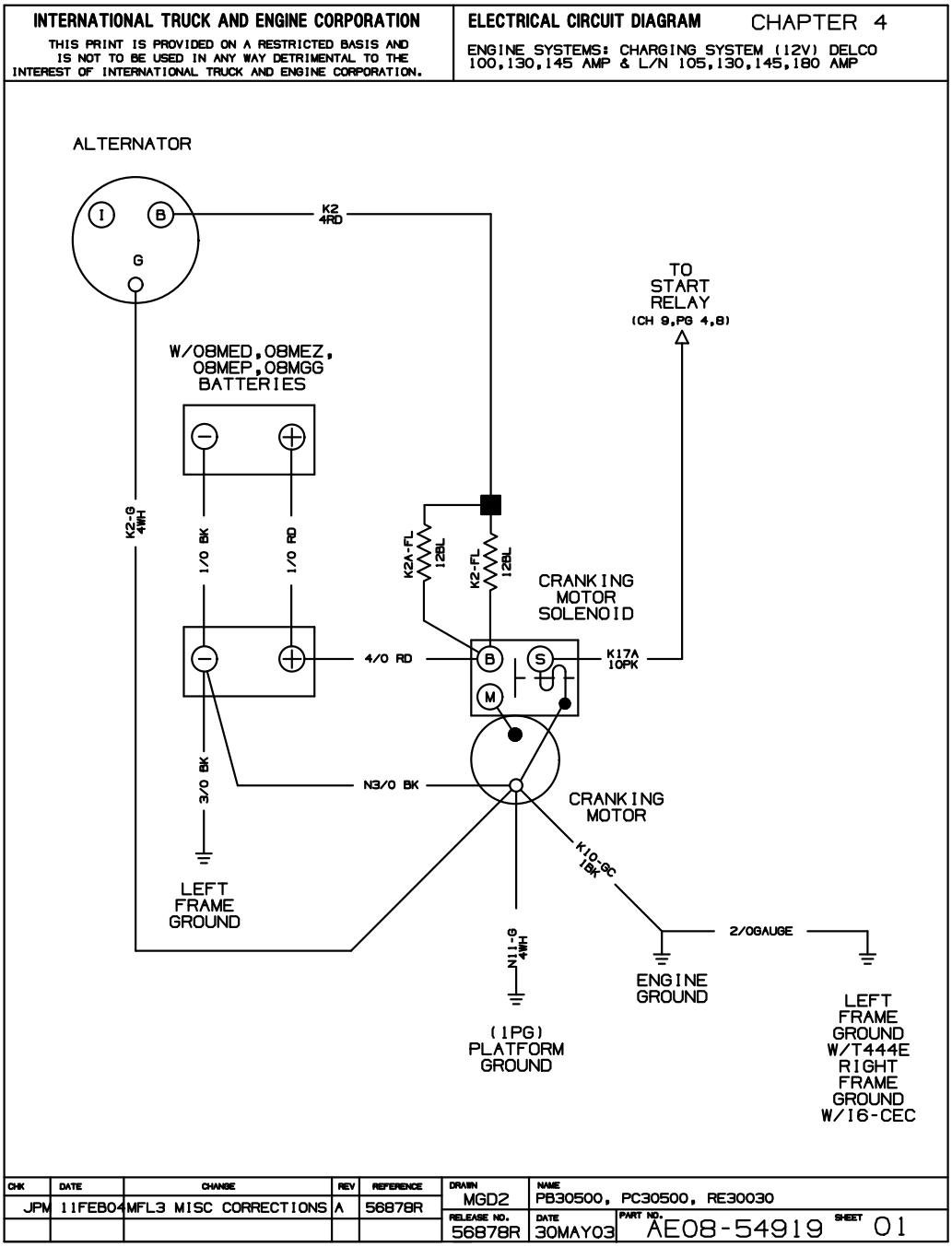

Figure 17 Charging System (12V) Delco 100, 130, 145 Amp and L/N 105, 130, 145, 180 Amp

Cranking System (12V), Optional Starter Overcrank Protection With VT 365, p. 2

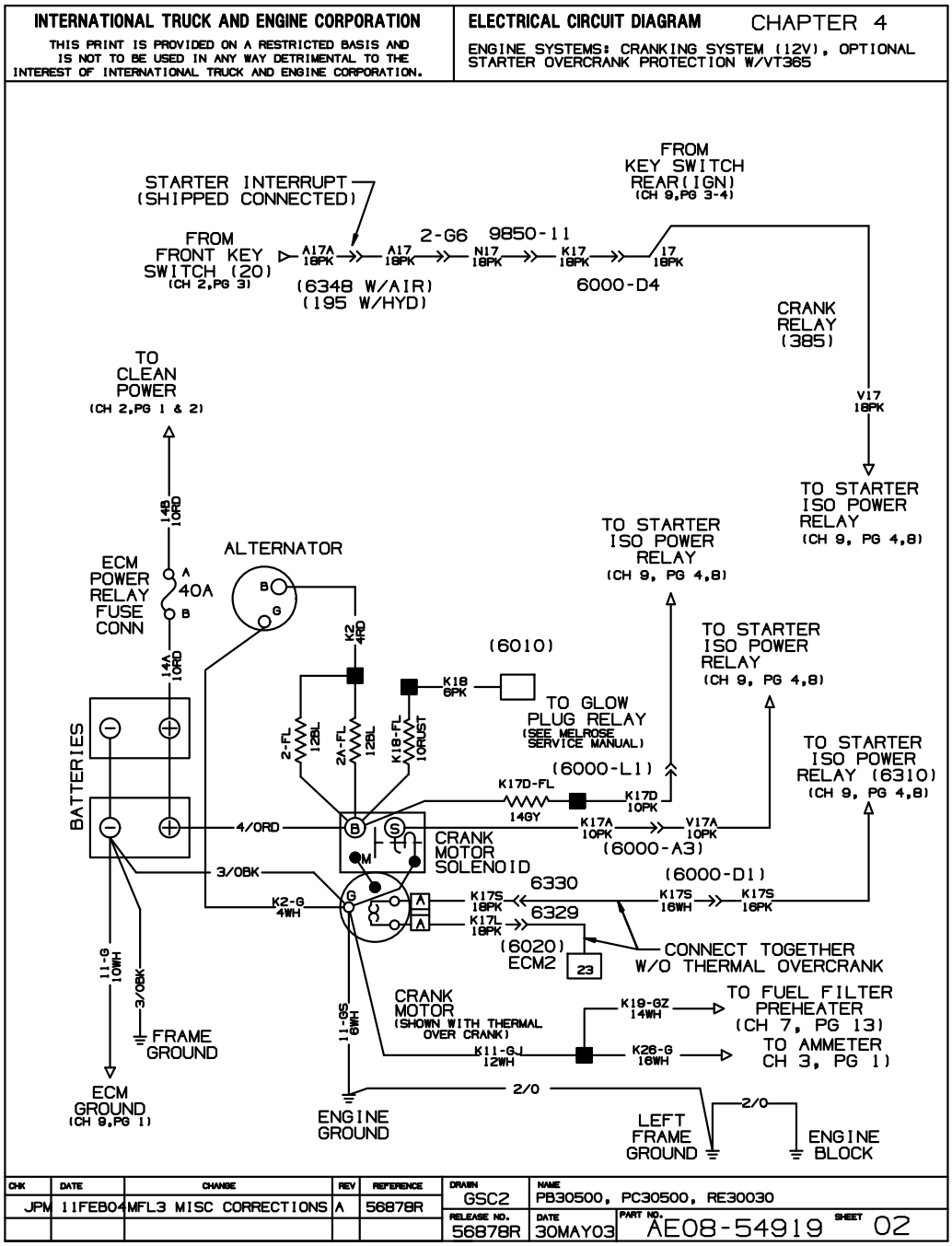

Figure 18 Cranking System (12V), Optional Starter Overcrank Protection With VT 365

Cranking System (12V), Optional Starter Overcrank Protection With I6, p. 3

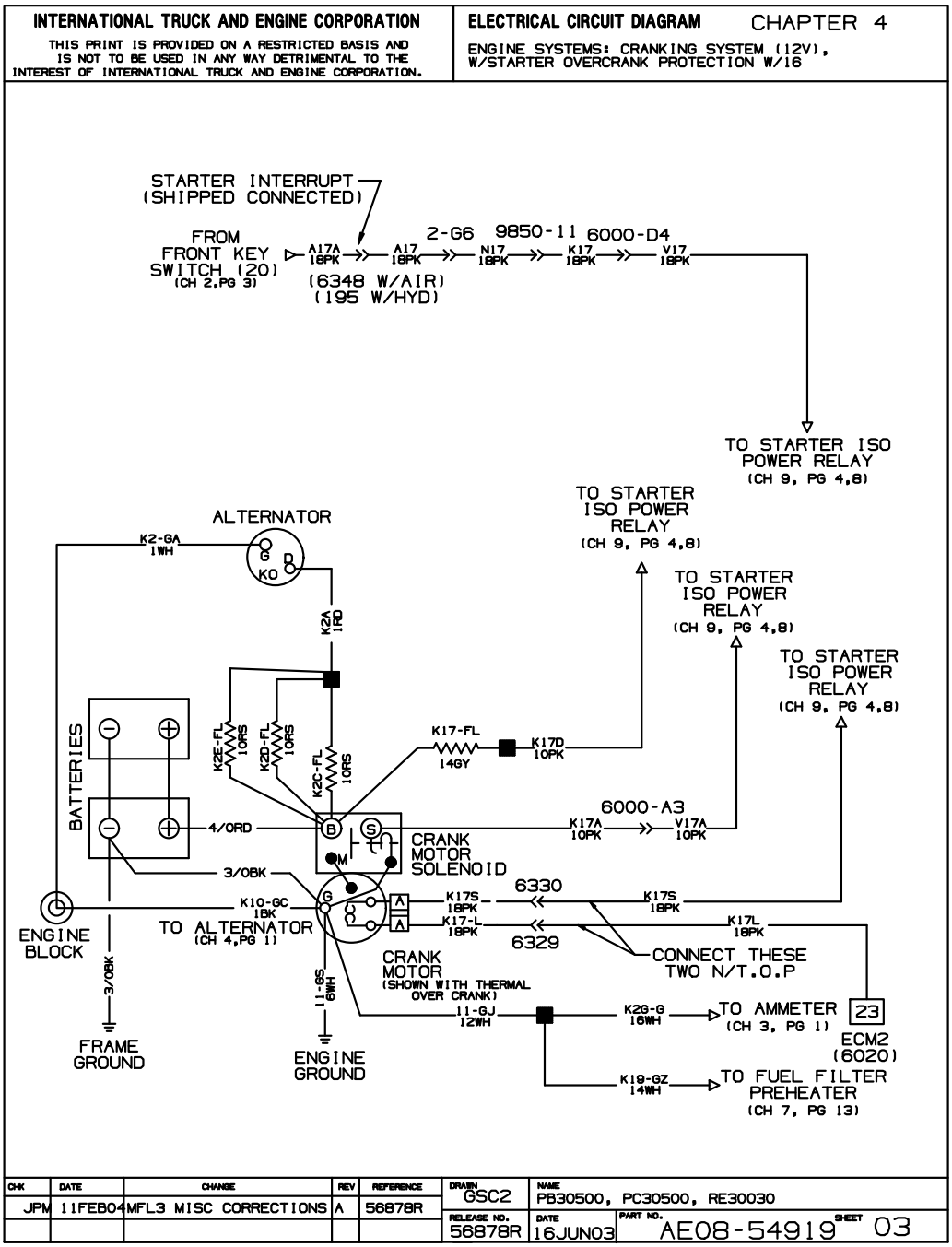

Figure 19 Cranking System (12V), Optional Starter Overcrank Protection With I6

Fan Solenoid Control, p. 4

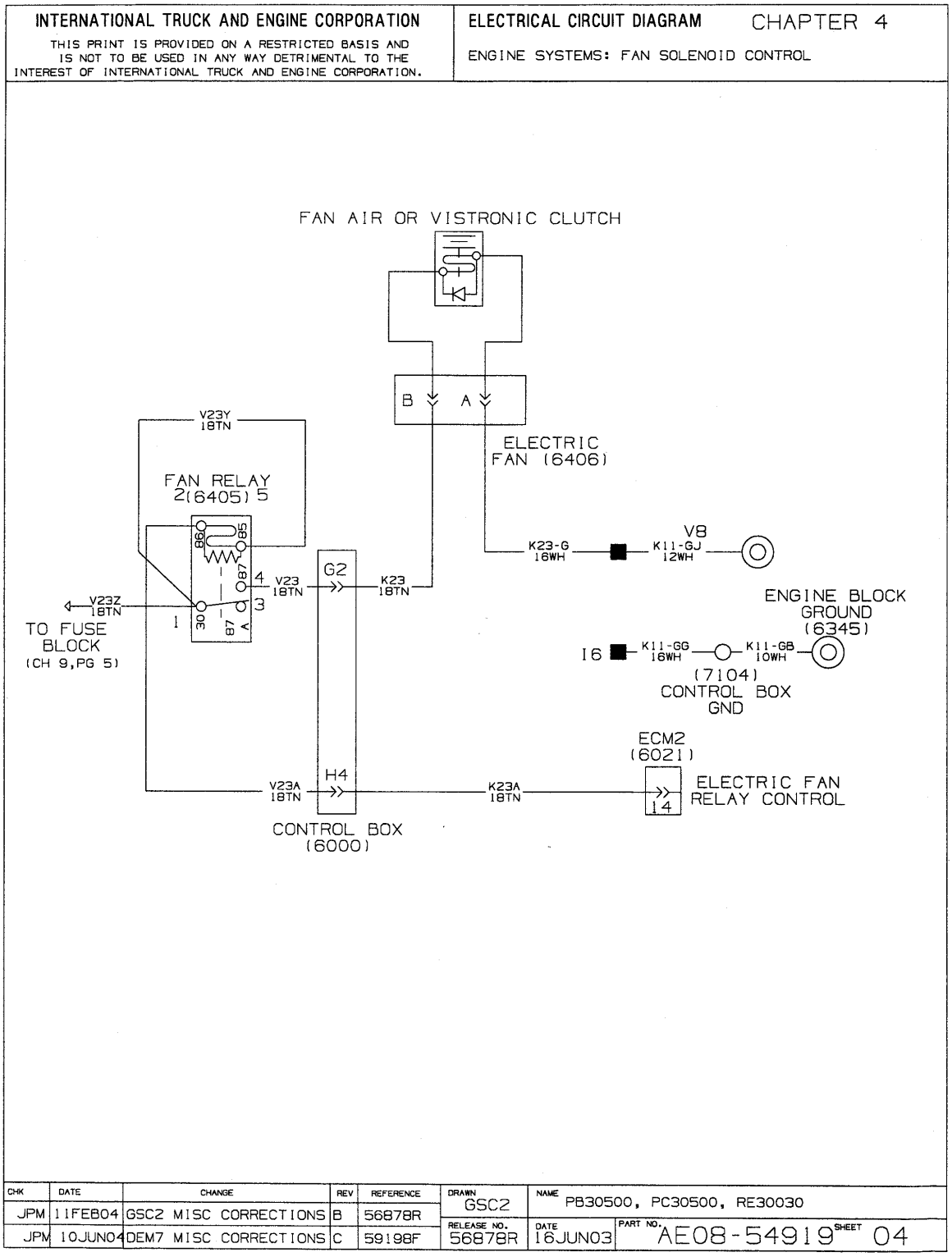

Figure 20 Fan Solenoid Control

1.5. GAUGES (CHAPTER 5)

Fuel Level Gauge, p. 1

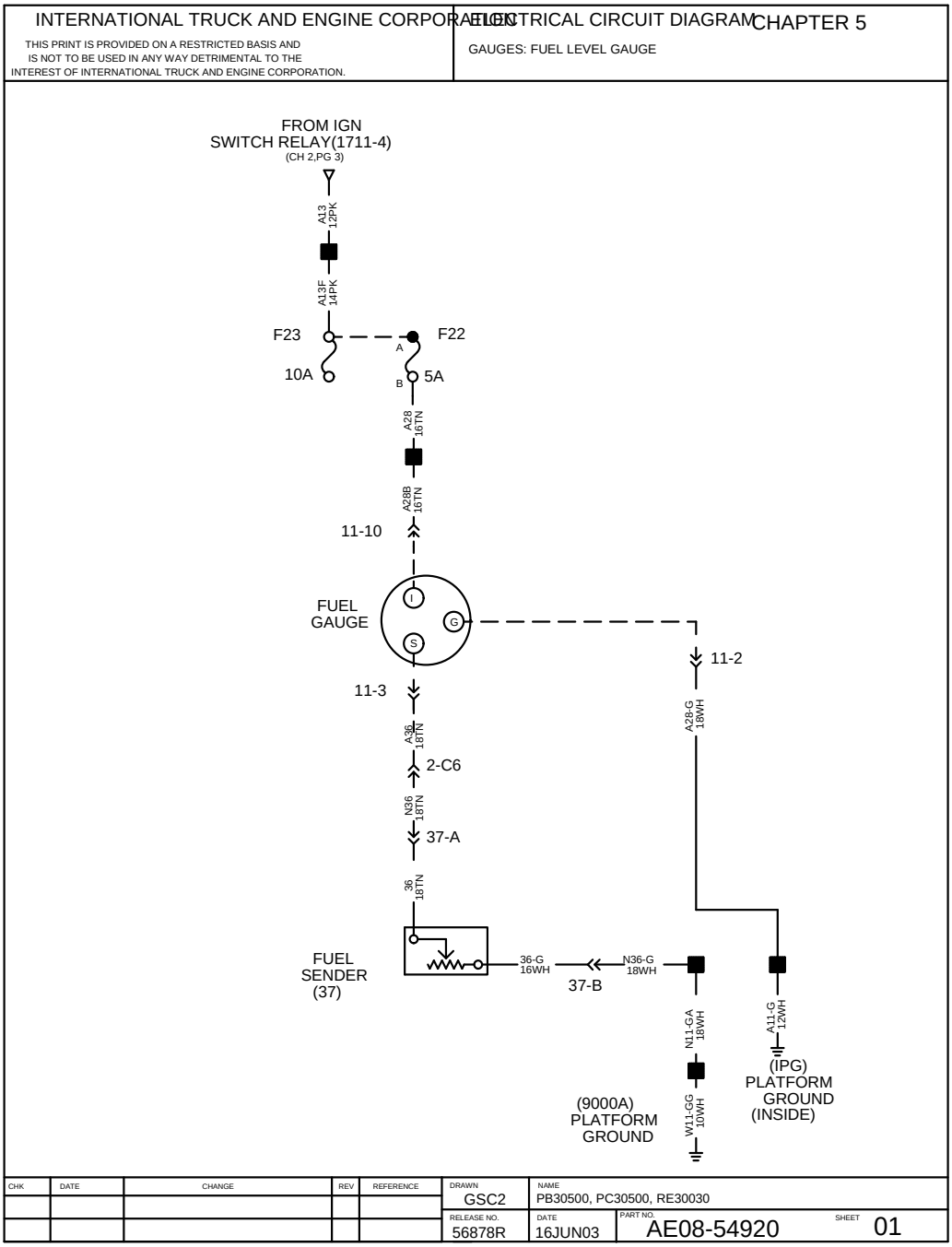

Figure 21 Fuel Level Gauge

Speedometer, Tachometer, Voltmeter, Engine Oil Pressure, Water Temperature, p. 2

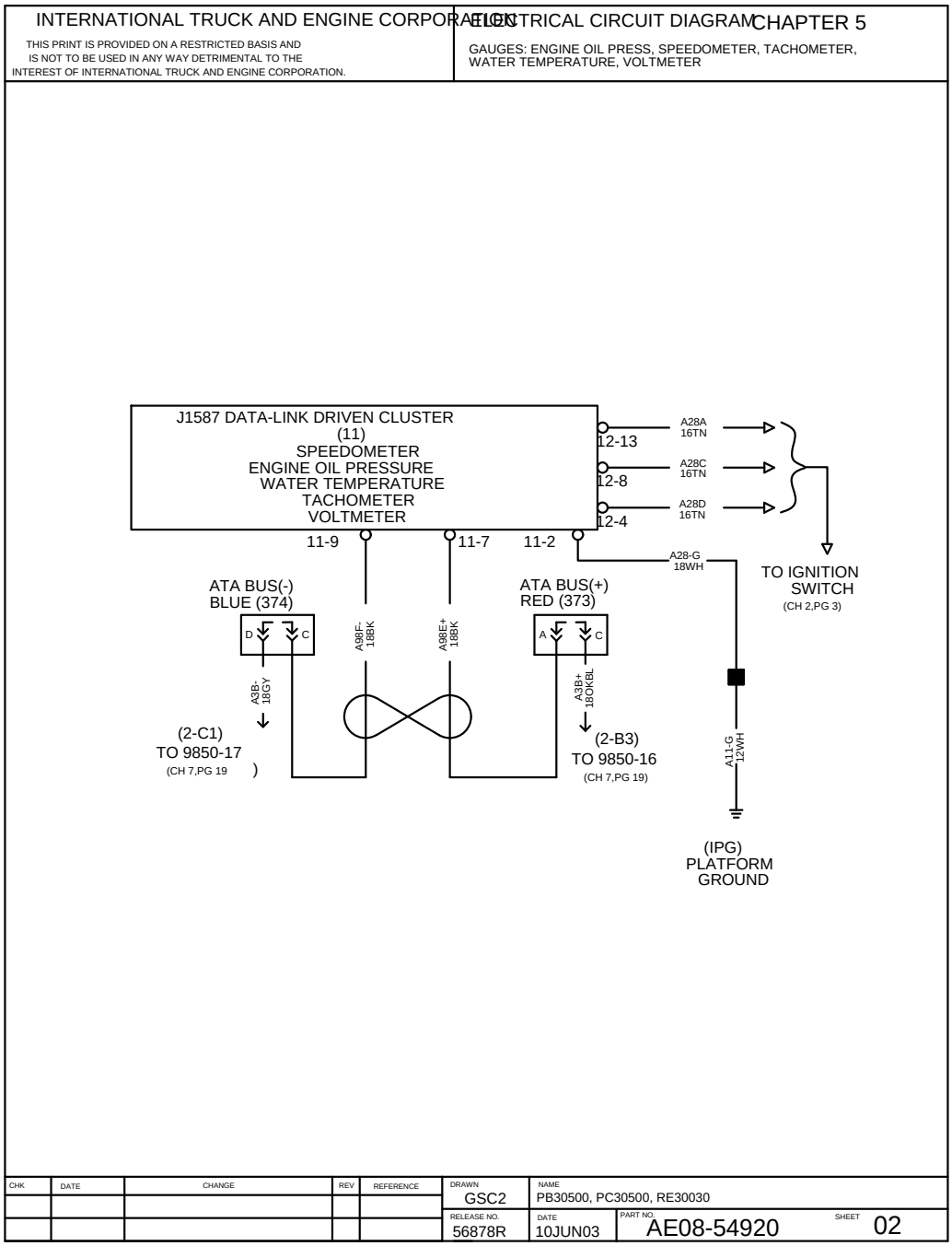

Figure 22 Speedometer, Tachometer, Voltmeter, Engine Oil Pressure, Water Temperature

Transmission Oil Temperature Gauge, p. 3

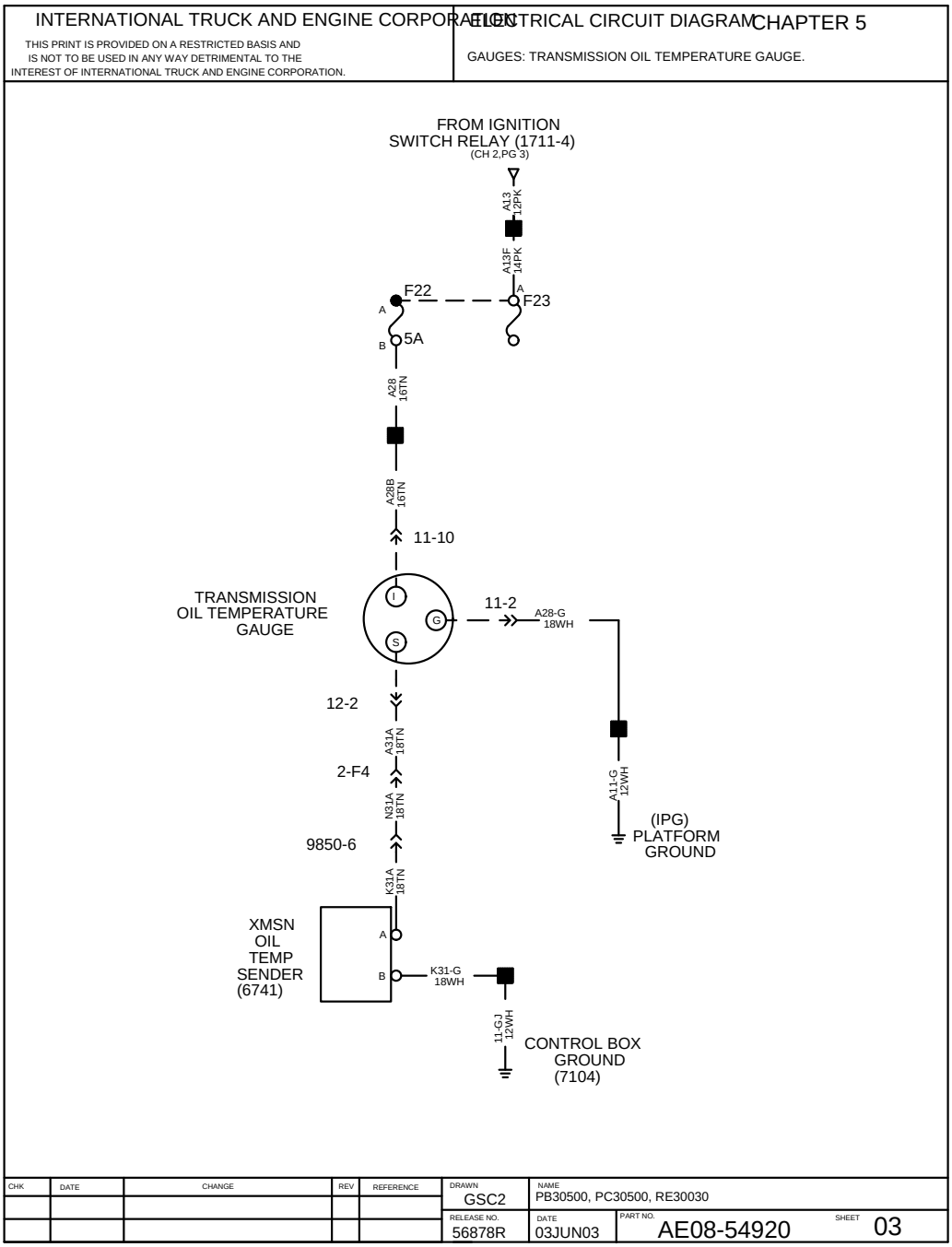

Figure 23 Transmission Oil Temperature Gauge

1.6. WARNING LIGHTS (CHAPTER 6)

Low Oil Pressure/High Water Temp./Low Coolant Level/Brake Warning (Air) Lights and Alarms, p. 1

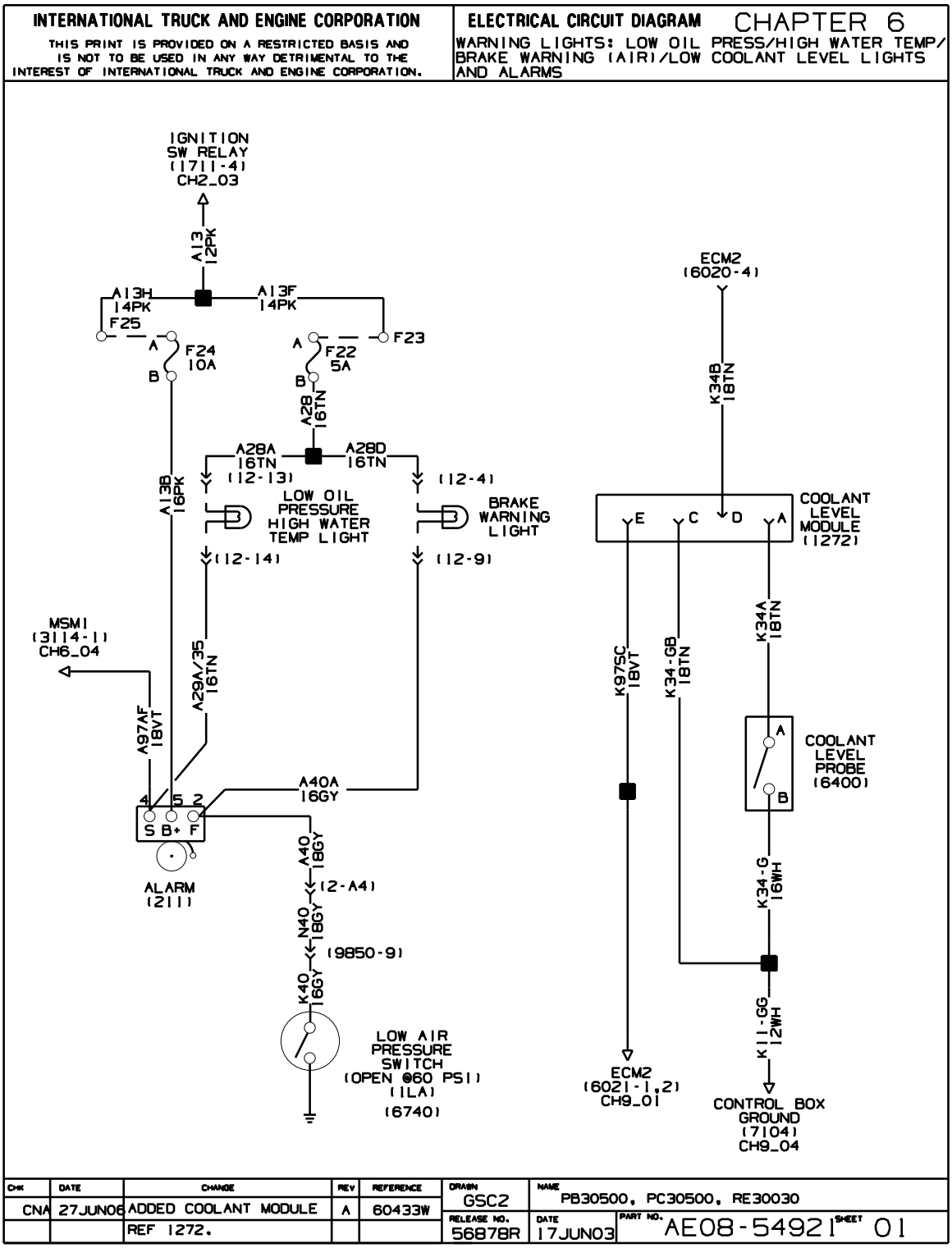

Figure 24 Low Oil Pressure/High Water Temp./Low Coolant Level/Brake Warning (Air) Lights and Alarms

Low Oil Pressure/High Water Temperature/Low Coolant Level/Brake Warning (Hyd.) Lights and Alarms, p. 2

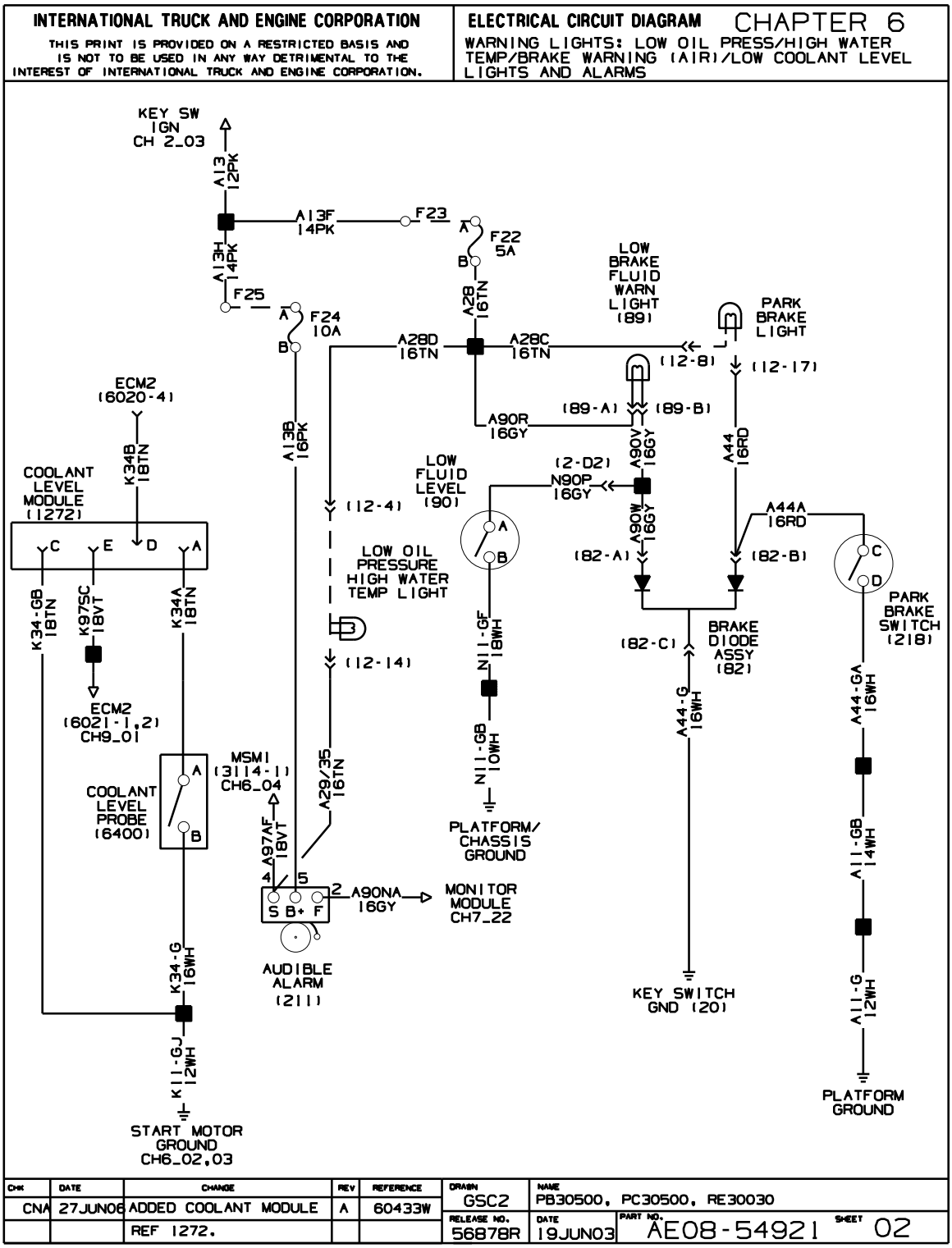

Figure 25 Low Oil Pressure/High Water Temperature/Low Coolant Level/Brake Warning (Hyd.) Lights and Alarms

Diagnostic/Programming Connector and Warning Light System, p. 3

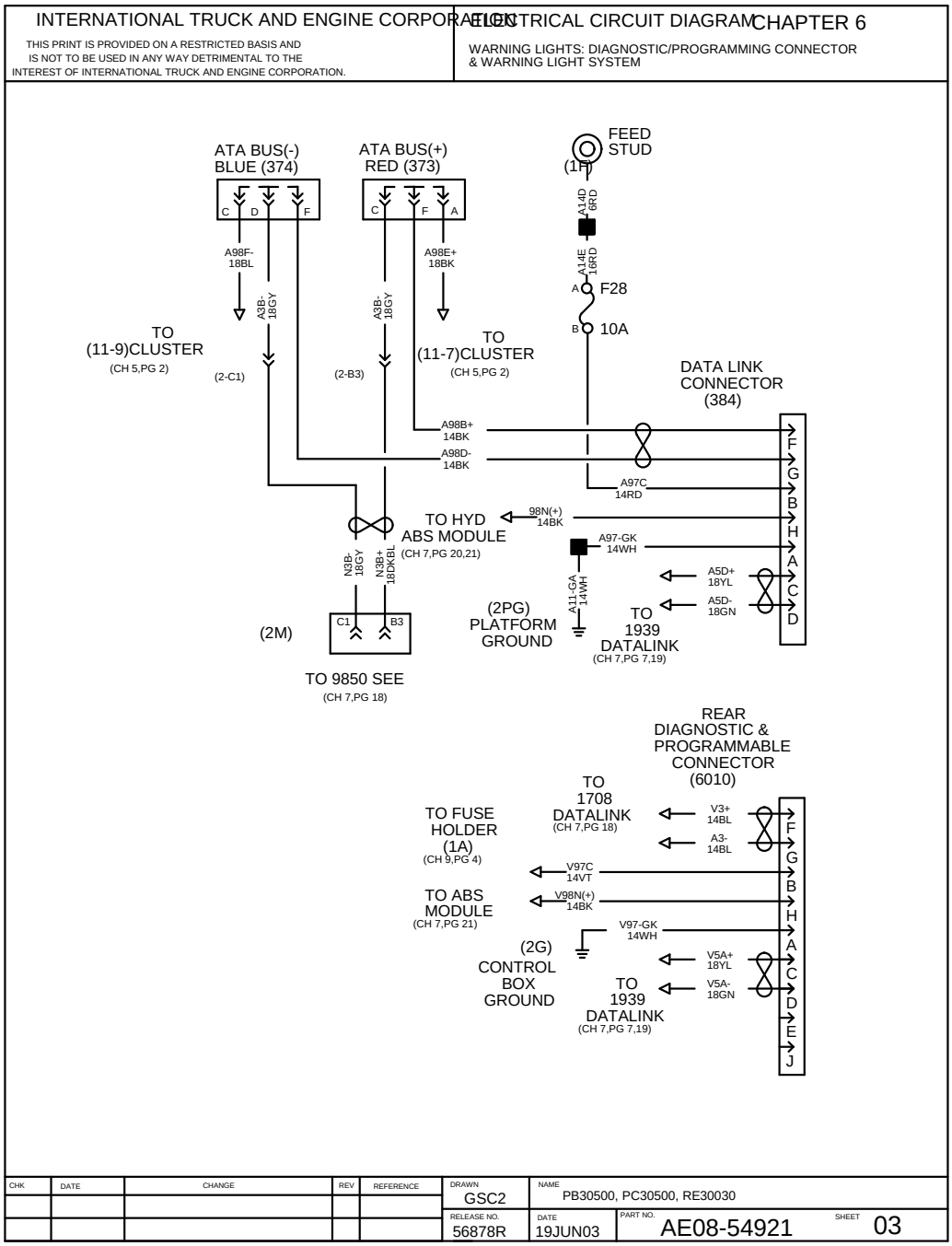

Figure 26 Diagnostic/Programming Connector and Warning Light System

Wait-to-Start, Engine Warning, Fuel Filter, Change Oil, WIF and MSM Wiring, p. 4

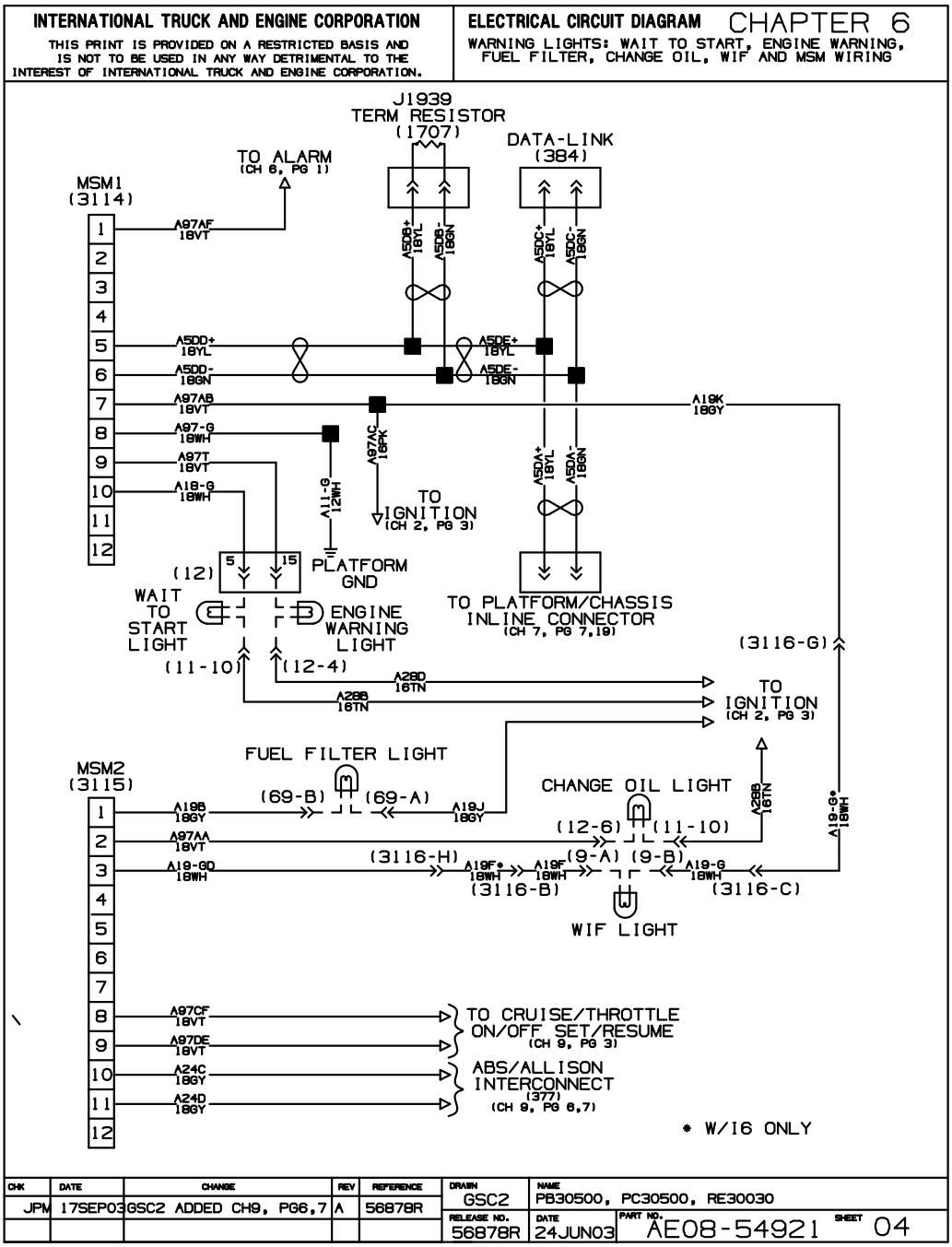

Figure 27 Wait-to-Start, Engine Warning, Fuel Filter, Change Oil, WIF and MSM Wiring

1.7. CHASSIS ACCESSORIES (CHAPTER 7)

Air Dryer (AD-9) With Air Brakes, p. 1

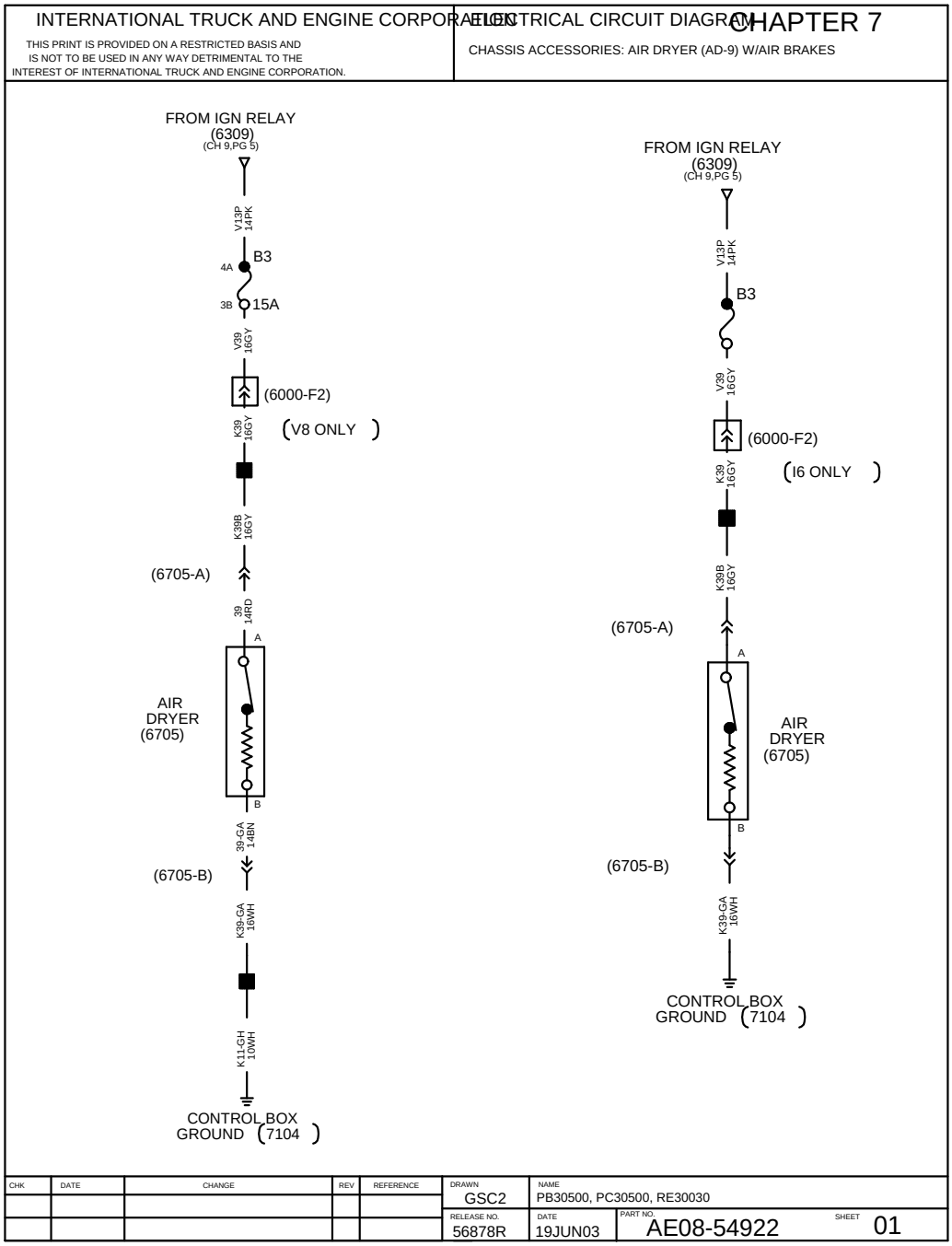

Figure 28 Air Dryer (AD-9) With Air Brakes

WTEC Antilock Brakes, p. 2

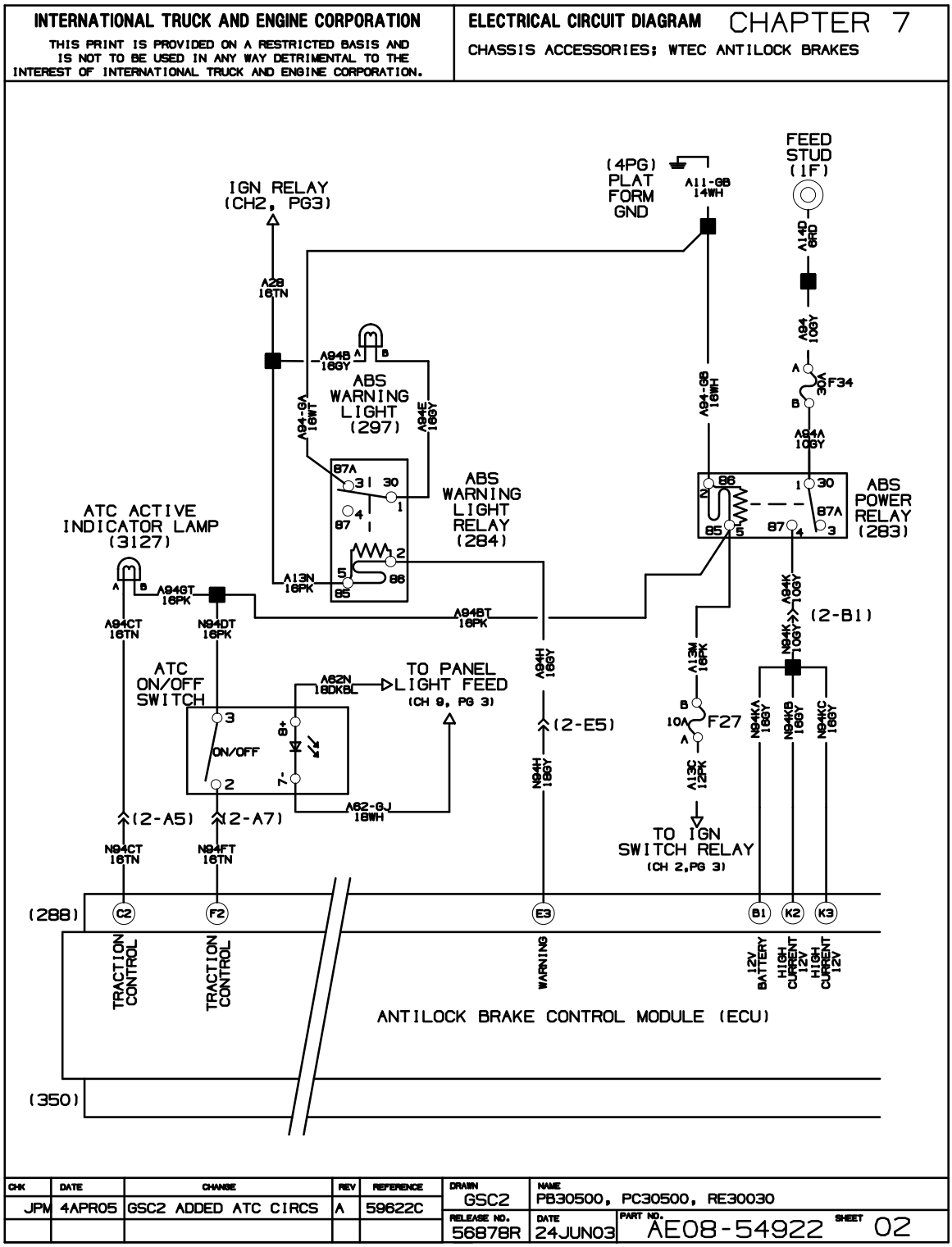

Figure 29 WTEC Antilock Brakes

Antilock Brakes (4–Channel) — Air, p. 3

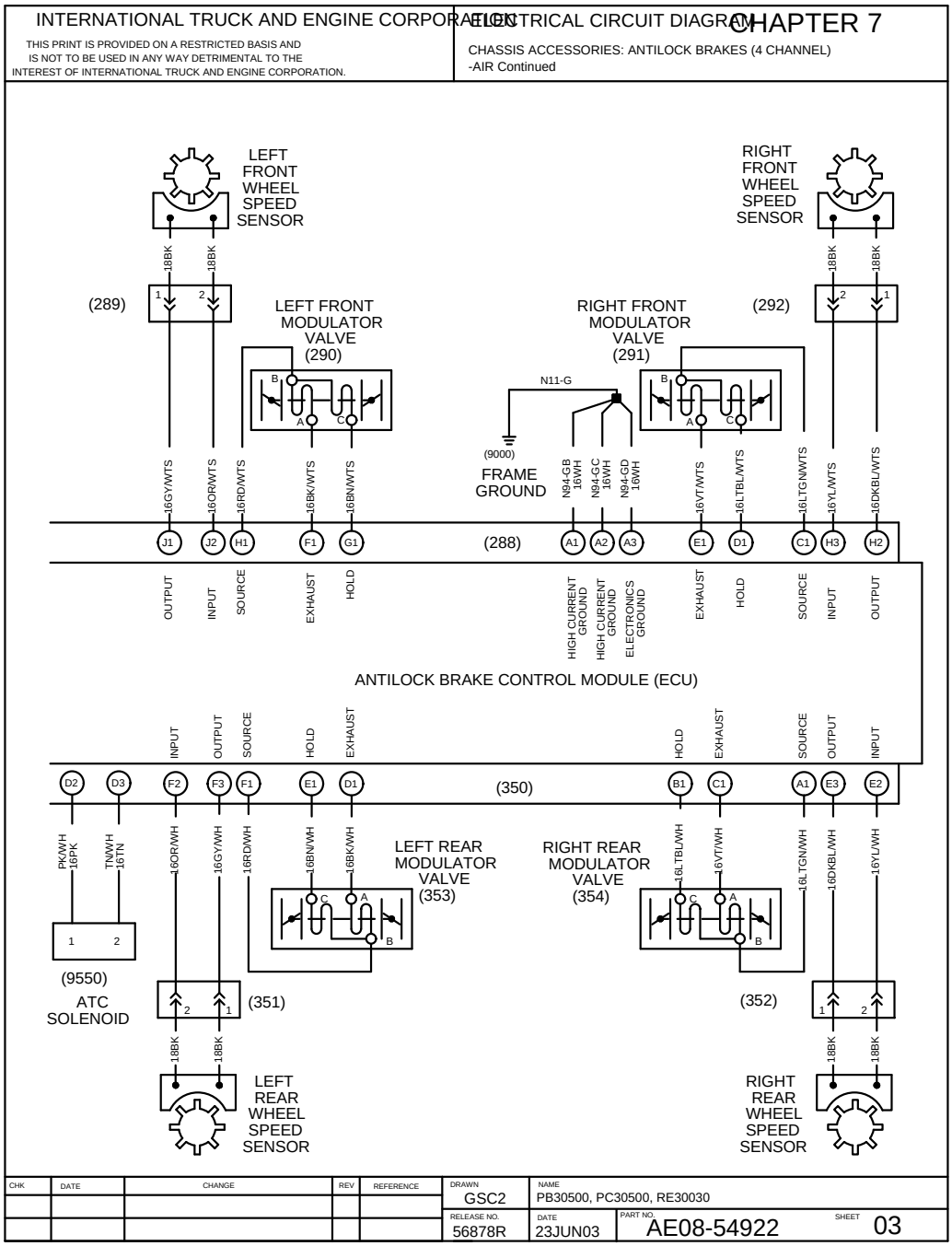

Figure 30 Antilock Brakes (4–Channel) — Air

Allison WTEC Transmission, p. 4

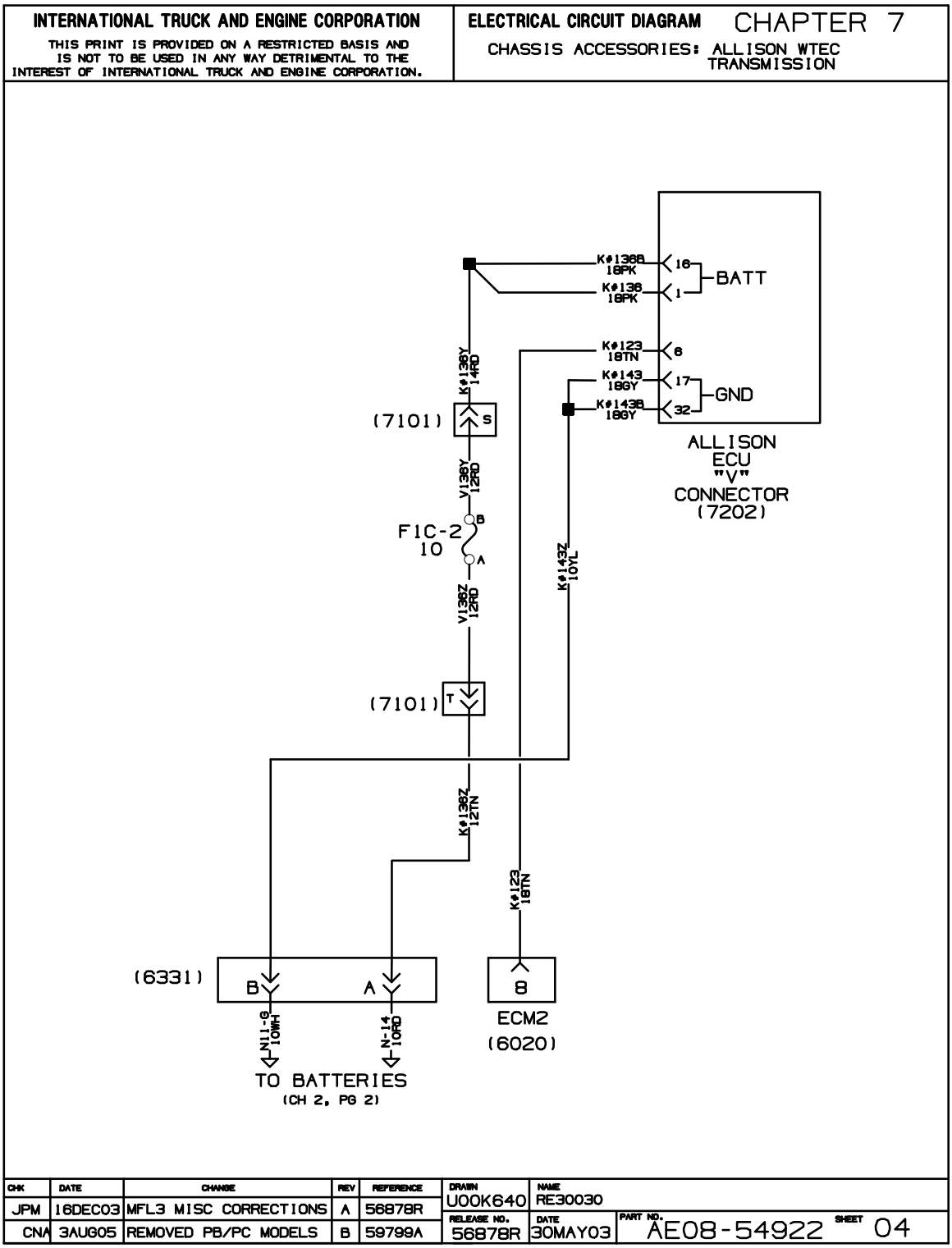

Figure 31 Allison WTEC Transmission

Allison WTEC Transmission Gen 4 (Cont.), p. 5

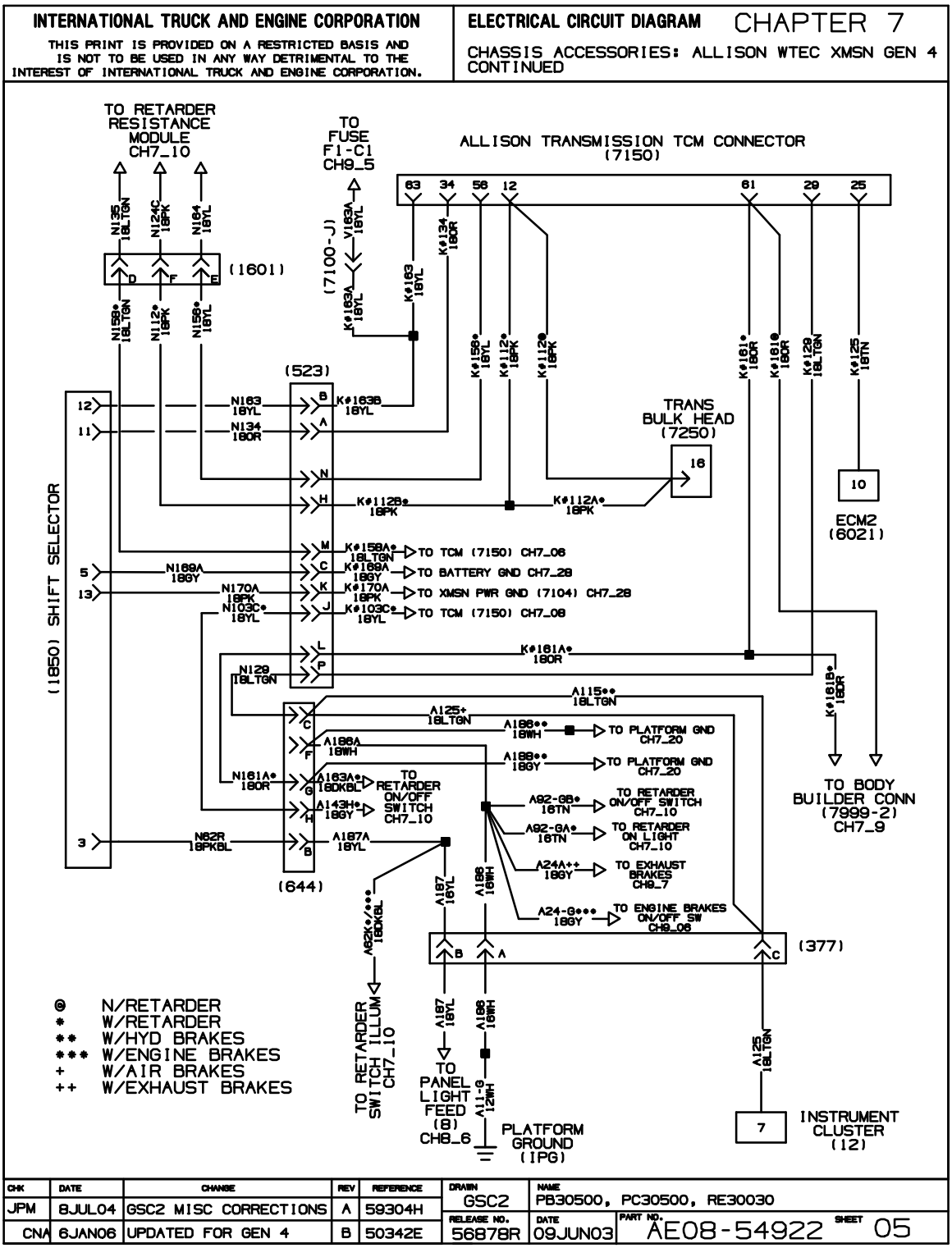

Figure 32 Allison WTEC Transmission Gen 4 (Cont.)

Allison WTEC Transmission Gen 4 (Cont.), p. 6

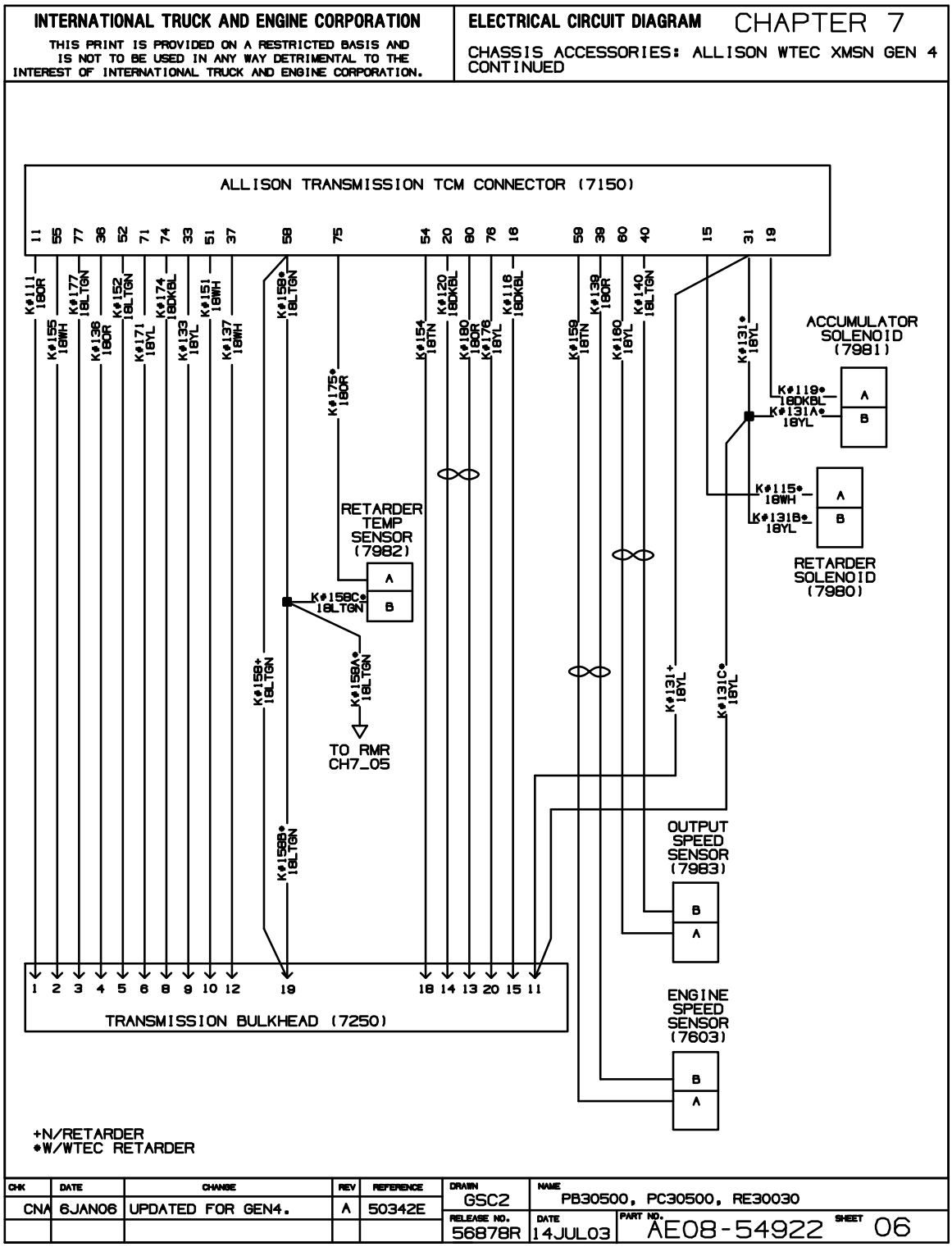

Figure 33 Allison WTEC Transmission Gen 4 (Cont.)

Allison WTEC Transmission Gen 4 (Cont.), p. 7

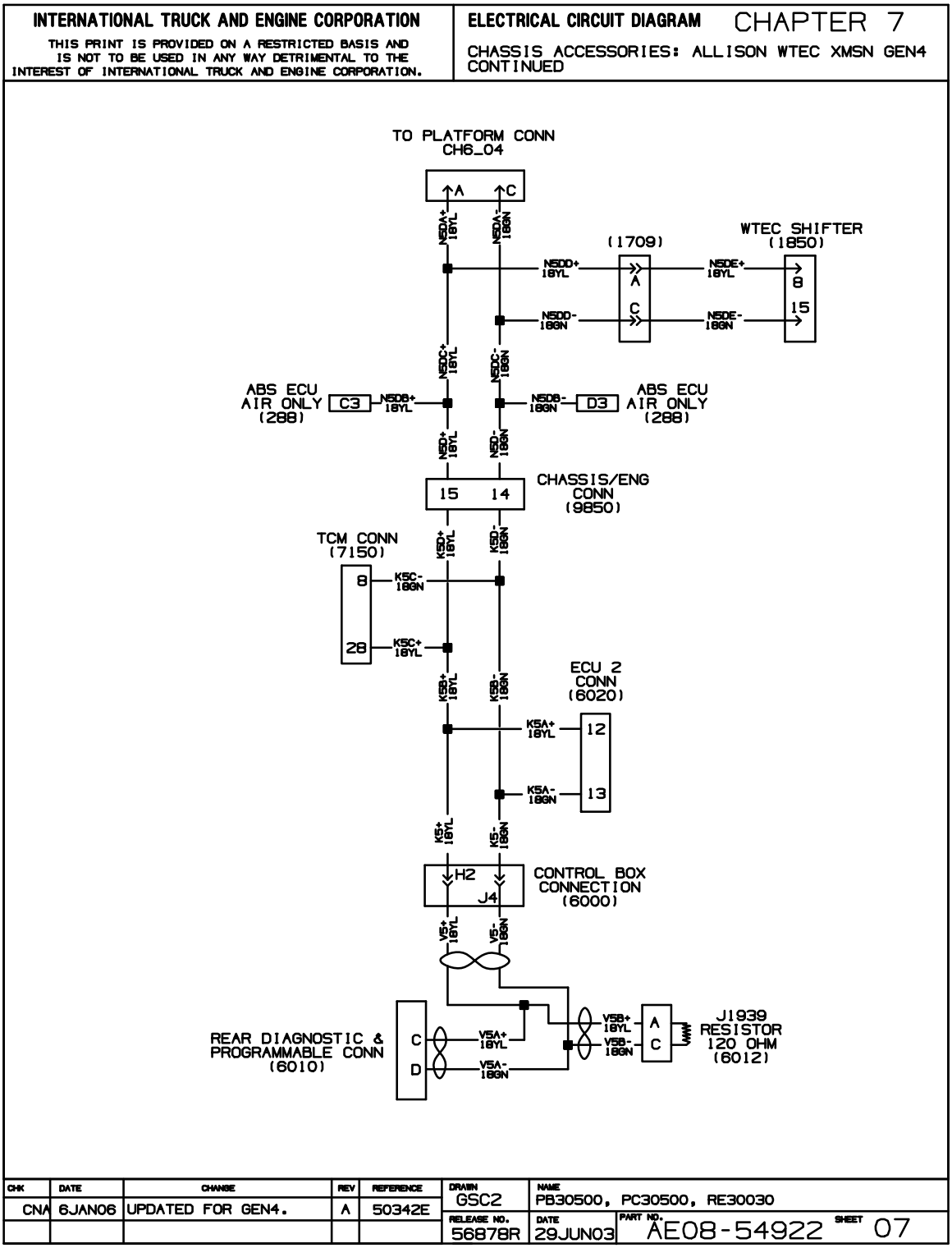

Figure 34 Allison WTEC Transmission Gen 4 (Cont.)

Allison WTEC Transmission Gen 4 (Cont.), p. 8

INTERNATIONAL TRUCK AND ENGINE CORPORATION

THIS PRINT IS PROVIDED ON A RESTRICTED BASIS AND IS NOT TO BE USED IN ANY WAY DETRIMENTAL TO THE INTEREST OF INTERNATIONAL TRUCK AND ENGINE CORPORATION.

ELECTRICAL CIRCUIT DIAGRAM CHAPTER 7

CHASSIS ACCESSORIES: ALLISON WTEC XMSN GEN 4 CONTINUED

ALLISON (BLACK)
SPARE INPUT/OUTPUT
12-WAY DEUTSCH CONN (7966)

CAVITY	ALLISON CIRCUIT NUMBER	DESCRIPTION
1	103	SIGNAL GND
2	101	AUX. FUNCTION RANGE INHIBIT (STD)
3	117	AUTO NEUTRAL FOR PTO (STD)
5	143	FIRE TRUCK PUMP MODE
6	142	AUX. HOLD
8	105	OUTPUT SPEED INDICATOR A
9	145	RANGE INDICATOR
11	162	SERVICE BRAKE STATUS
12	130	PTO ENABLE 2

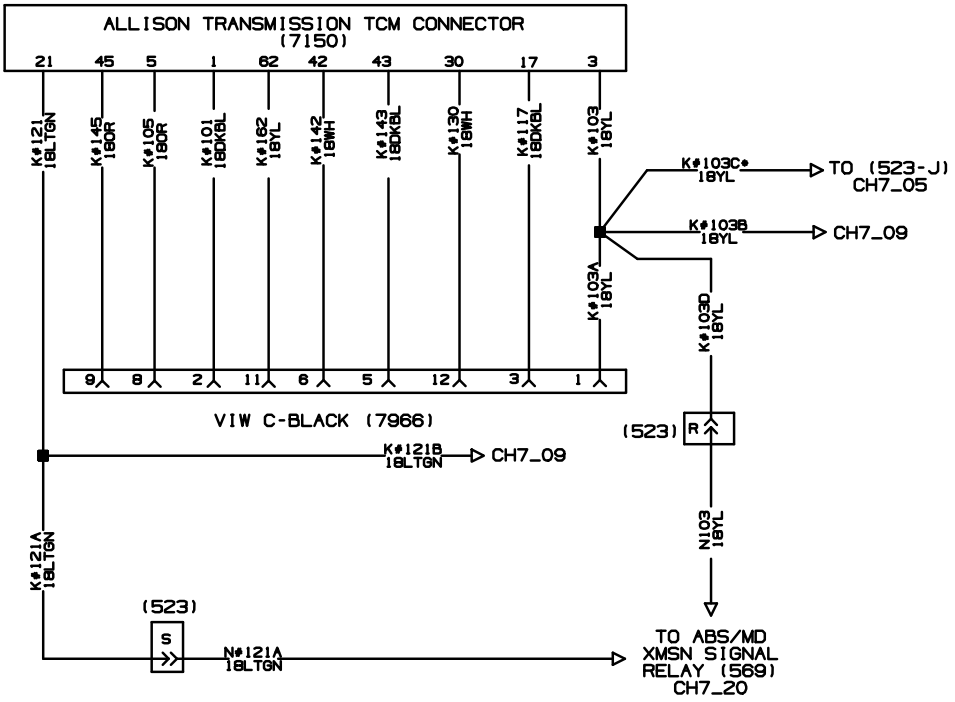

* W/RETARDER

CHK	DATE	CHANGE	REV	REFERENCE	DRAWN	NAME	
CNA	6JAN06	UPDATED FOR GEN4	A	50342E	GSC2	PB30500, PC30500, RE30030	
					RELEASE NO. 56878R	DATE 28JUN03	PART NO. AE08-54922 SHEET 08

Figure 35 Allison WTEC Transmission Gen 4 (Cont.)

Allison WTEC Transmission Gen 4 (Cont.), p. 9

INTERNATIONAL TRUCK AND ENGINE CORPORATION

THIS PRINT IS PROVIDED ON A RESTRICTED BASIS AND IS NOT TO BE USED IN ANY WAY DETRIMENTAL TO THE INTEREST OF INTERNATIONAL TRUCK AND ENGINE CORPORATION.

ELECTRICAL CIRCUIT DIAGRAM CHAPTER 7

CHASSIS ACCESSORIES: ALLISON WTEC XMSN GEN 4 CONTINUED

ALLISON (GREY)
SPARE INPUT/OUTPUT
12-WAY DEUTSCH CONN (7999)

CAVITY	ALLISON CIRCUIT NUMBER	DESCRIPTION
1	103B	SIGNAL GROUND
2	161	RETARDER ENABLE
3	157	ENGINE BRAKE / PRESELECT
4	124B	RETARDER INDICATOR
7	102	GENERAL PURPOSE INPUT
8	121B	GENERAL PURPOSE INPUT
9	164	SUMP/RETARDER TEMP INDICATOR

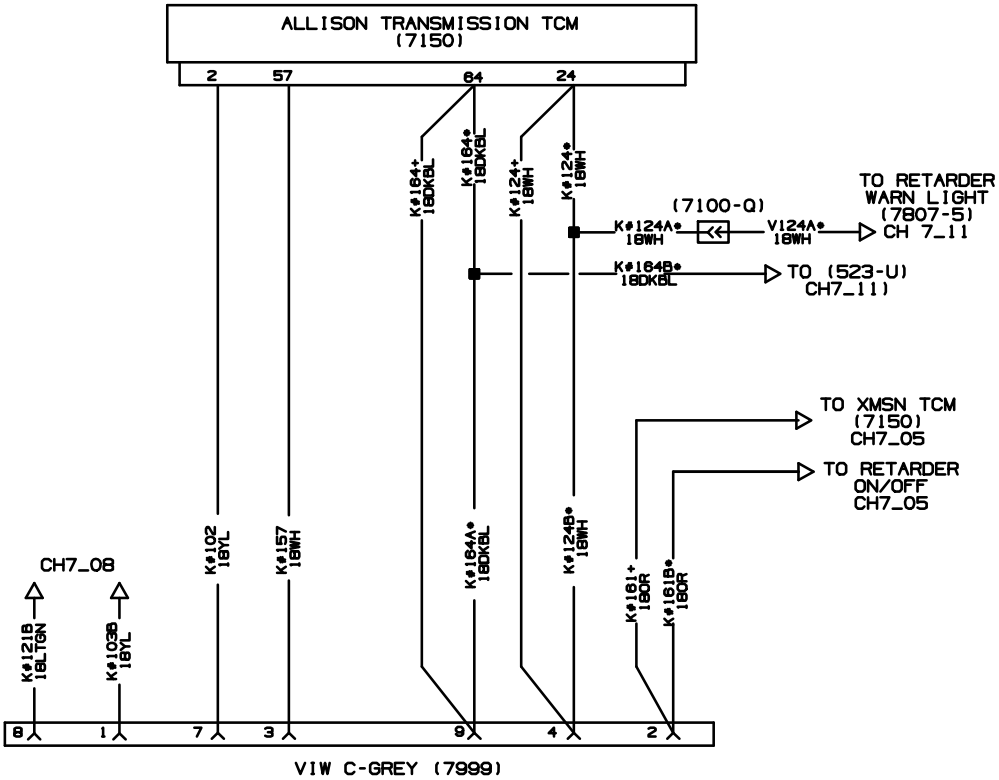

\+ N/RETARDER
* W/RETARDER

CHK	DATE	CHANGE	REV	REFERENCE	DRAWN	NAME
CNA	6JAN06	UPDATED FOR GEN 4	A	50342E	GSC2	PB30500, PC30500, RE30030
					RELEASE NO. 56878R	DATE 29JUN03 / PART NO. AE08-54922 / SHEET 09

Figure 36 Allison WTEC Transmission Gen 4 (Cont.)

Transmission Retarder Controls With I6 — Allison WTEC Trans. (Air Verified), p. 10

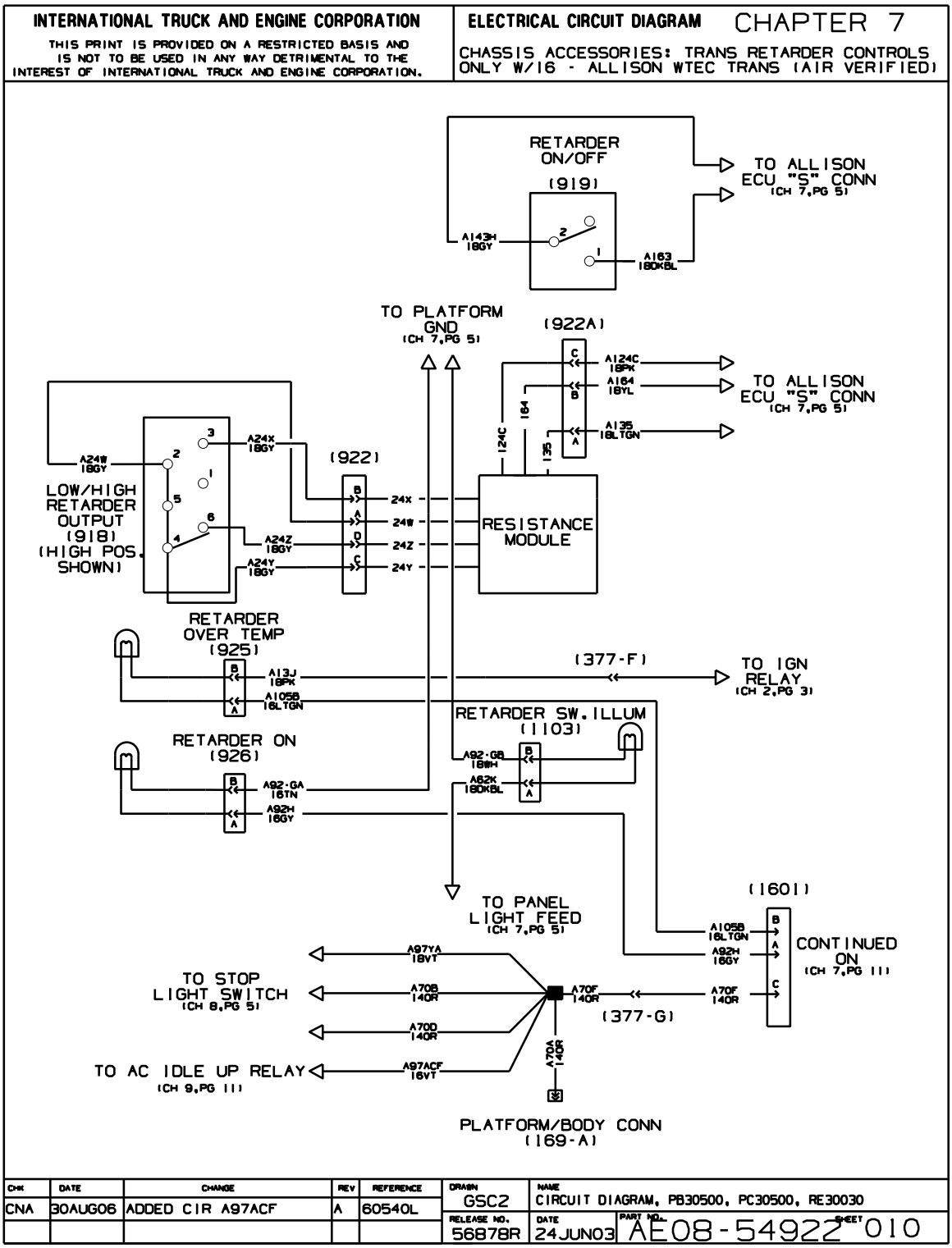

Figure 37 Transmission Retarder Controls With I6 — Allison WTEC Trans. (Air Verified)

Transmission Retarder Controls With I6 — Allison WTEC Trans. Gen 4 (Cont.), p. 11

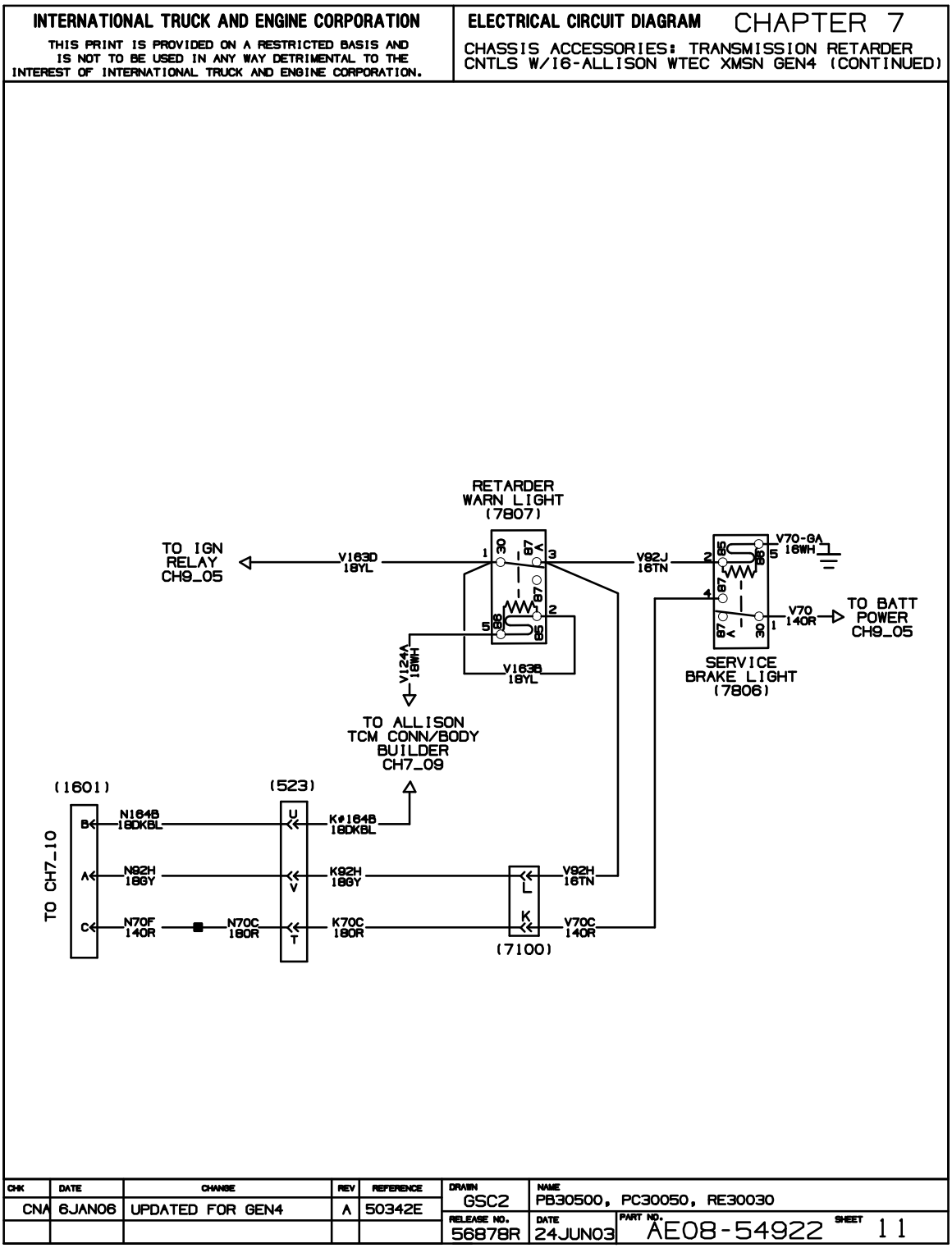

Figure 38 Transmission Retarder Controls With I6 — Allison WTEC Trans. Gen 4 (Cont.)

Drain Valve Wiring, p. 12

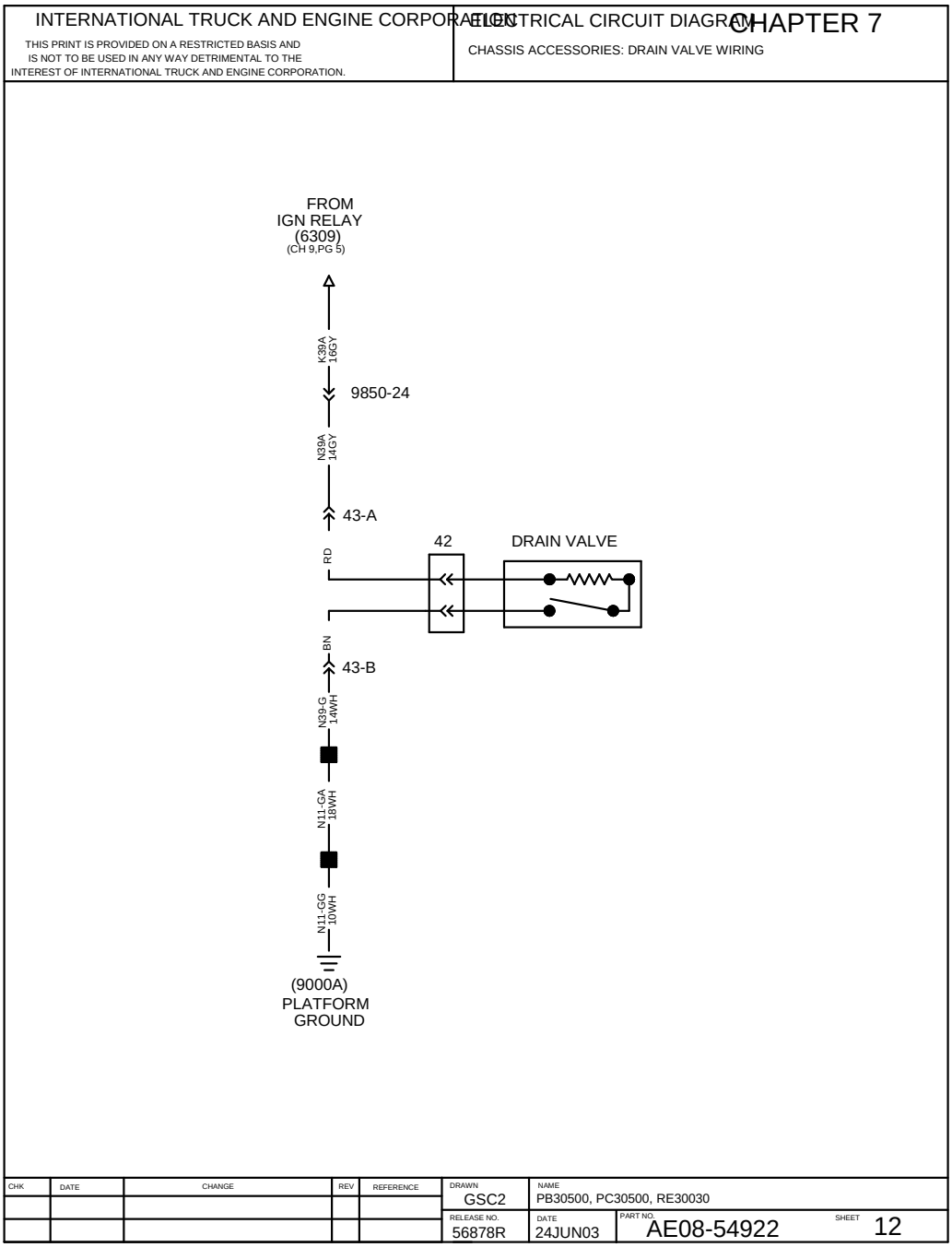

Figure 39 Drain Valve Wiring

Fuel Filter Wiring System, p. 13

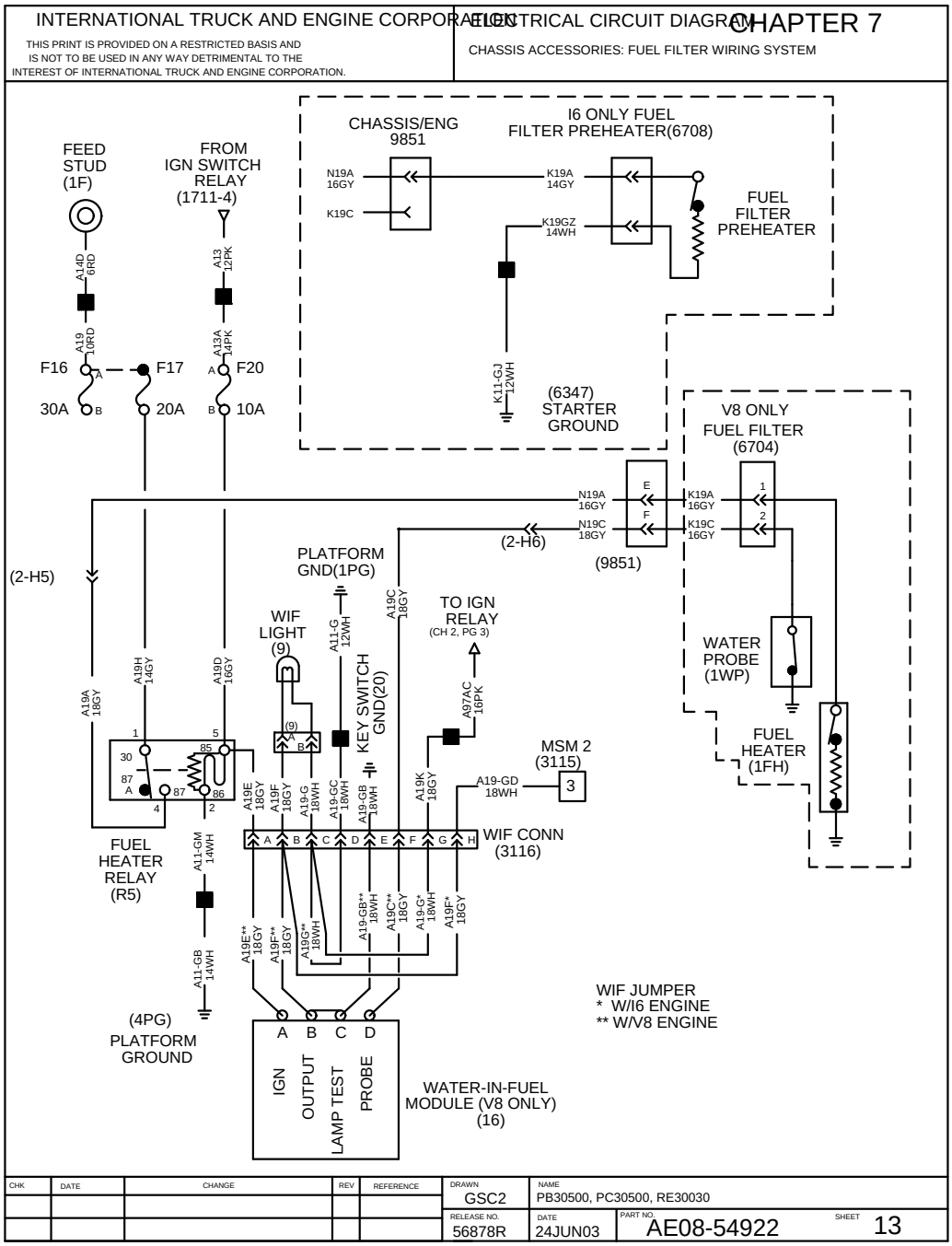

Figure 40 Fuel Filter Wiring System

Antilock Brake System — Hydraulic, p. 14

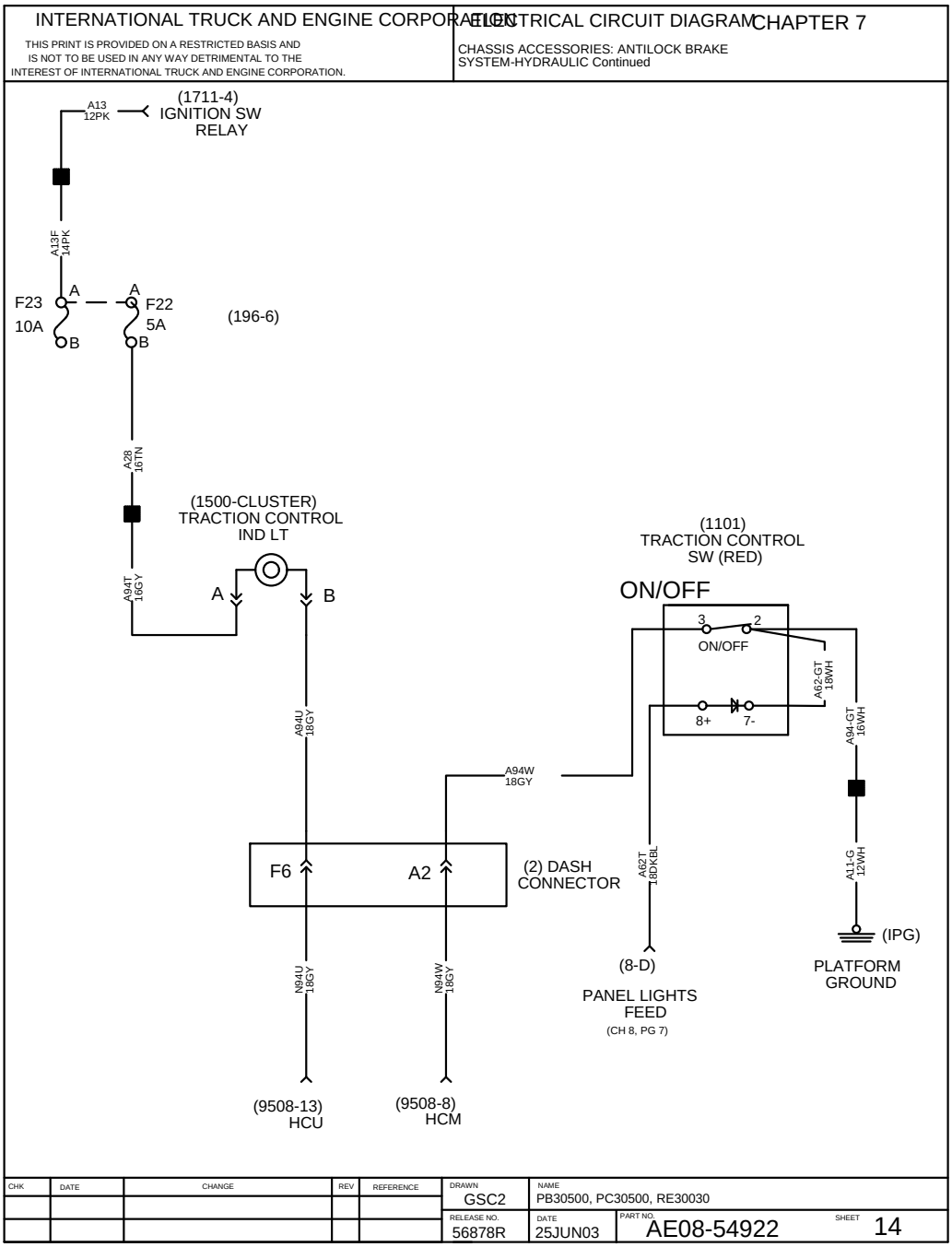

Figure 41 Antilock Brake System — Hydraulic

Antilock Brakes (4–Channel) W/Air Brakes W/Allison 2000 ICT Xmsn, p. 15

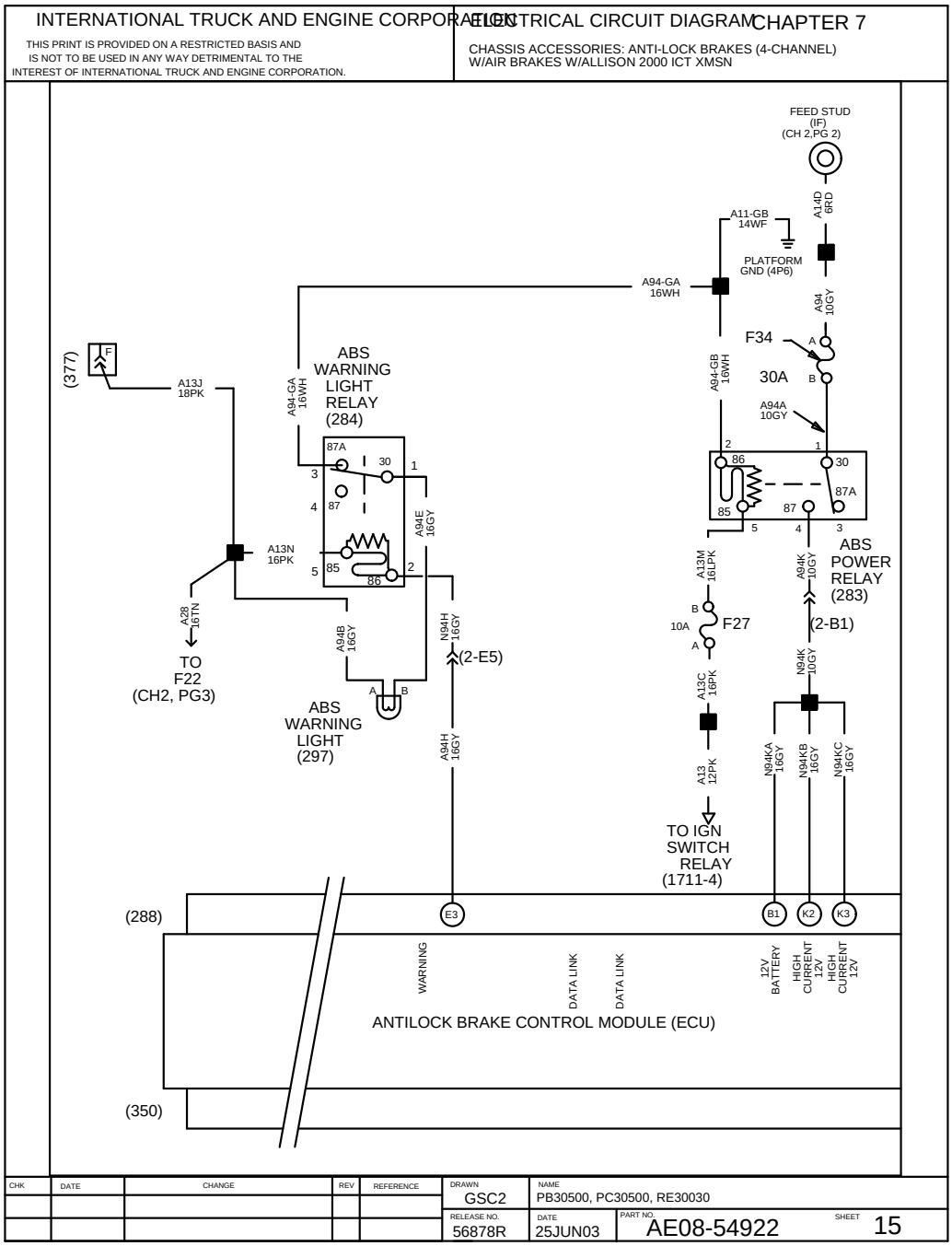

Figure 42 Antilock Brakes (4–Channel) W/Air Brakes W/Allison 2000 ICT Xmsn

Allison 2000 (LCT) Transmission, p. 16

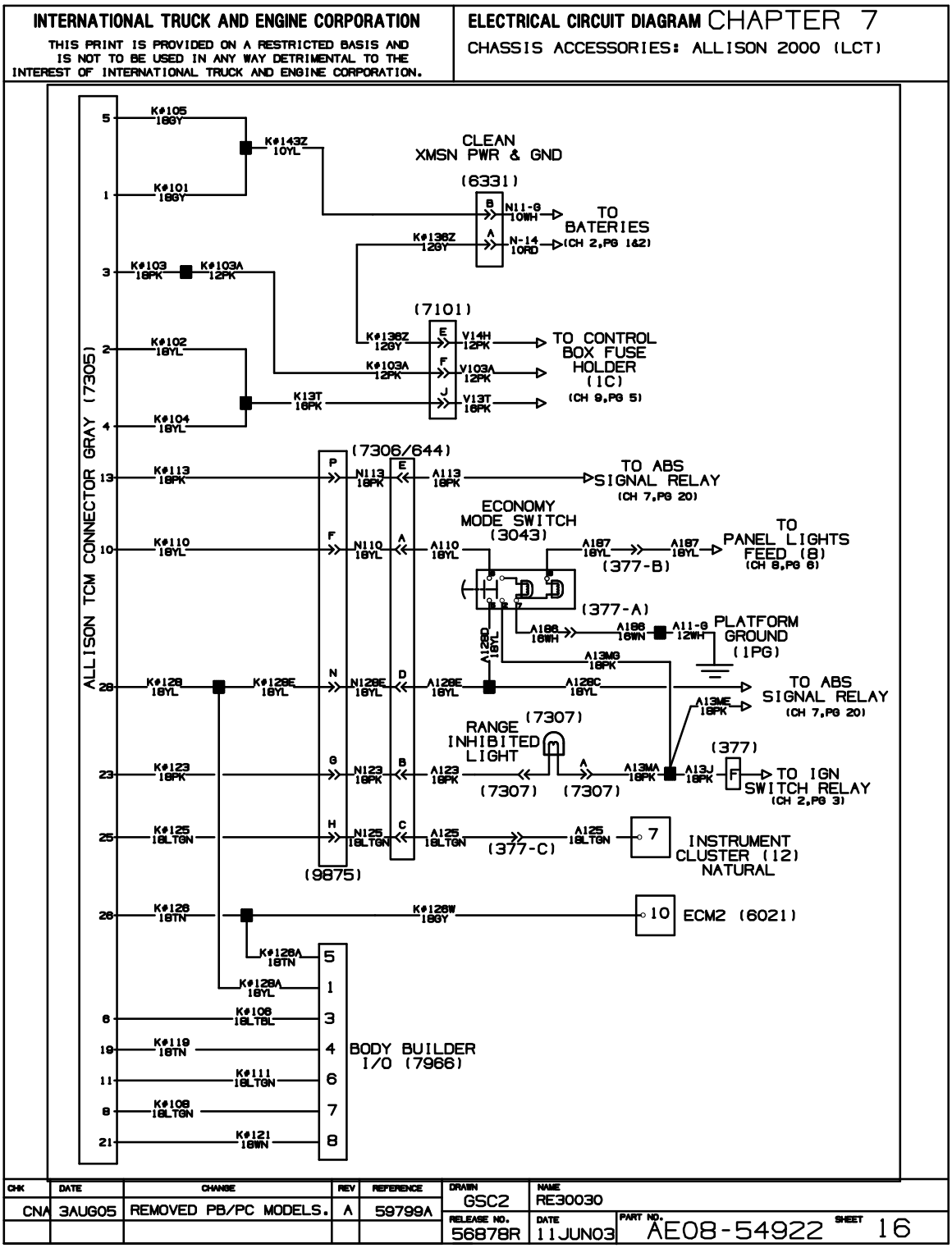

Figure 43 Allison 2000 (LCT) Transmission

Allison 1000/2000 Gen 4 Transmission, p. 17

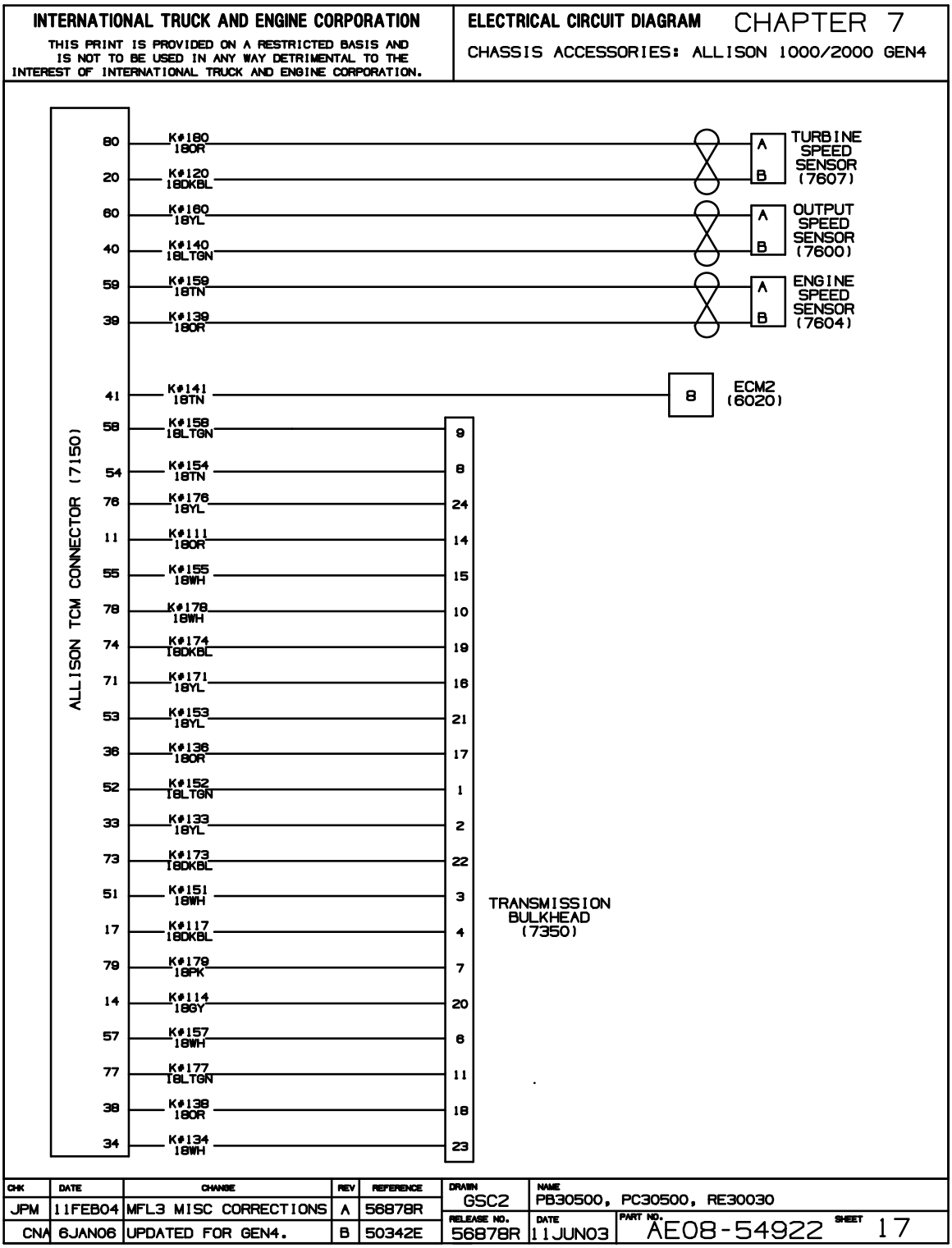

Figure 44 Allison 1000/2000 Gen 4 Transmission

Allison WTEC Transmission Gen 4, p. 18

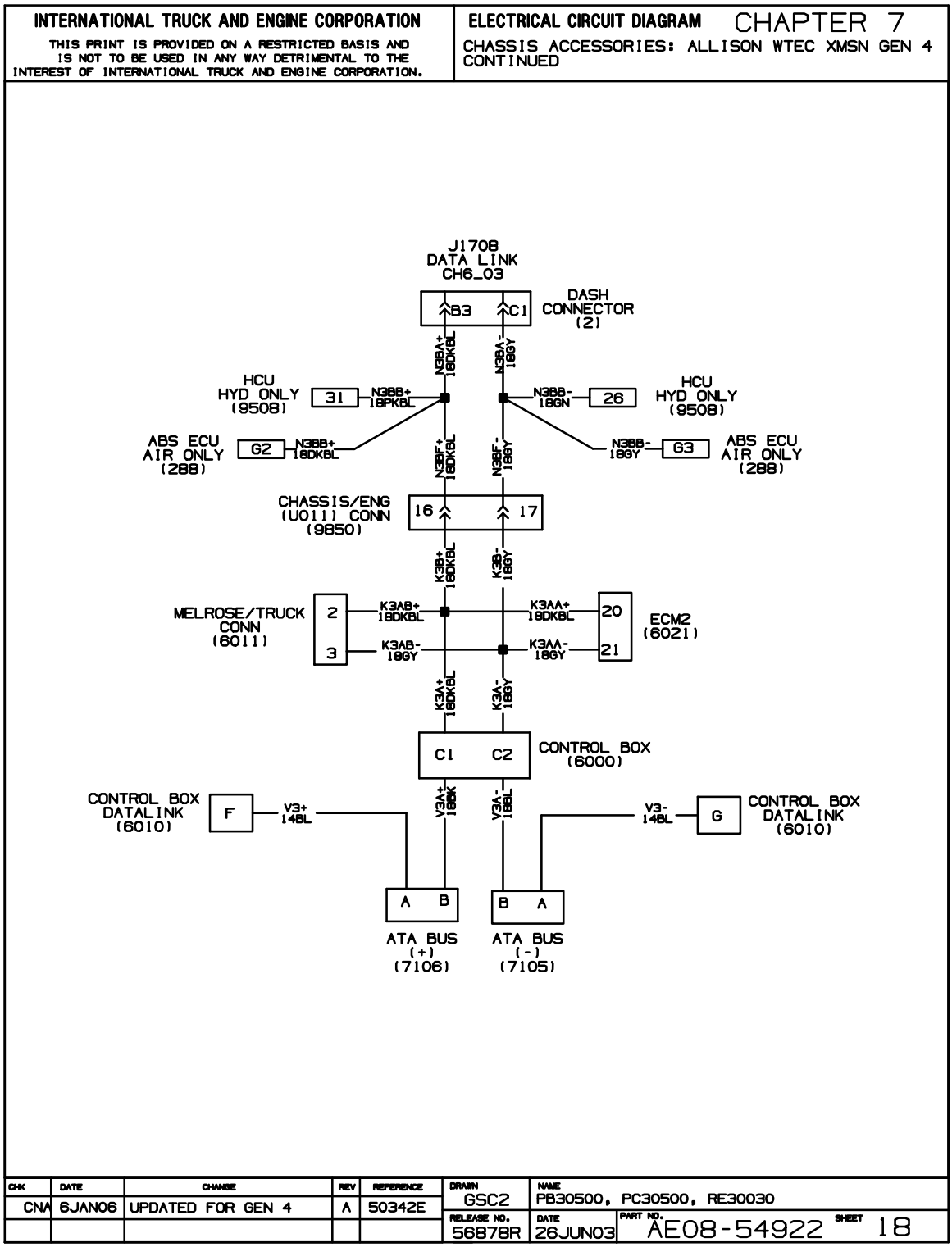

Figure 45 Allison WTEC Transmission Gen 4

Allison 1000/2000 Transmission Gen 4, p. 19

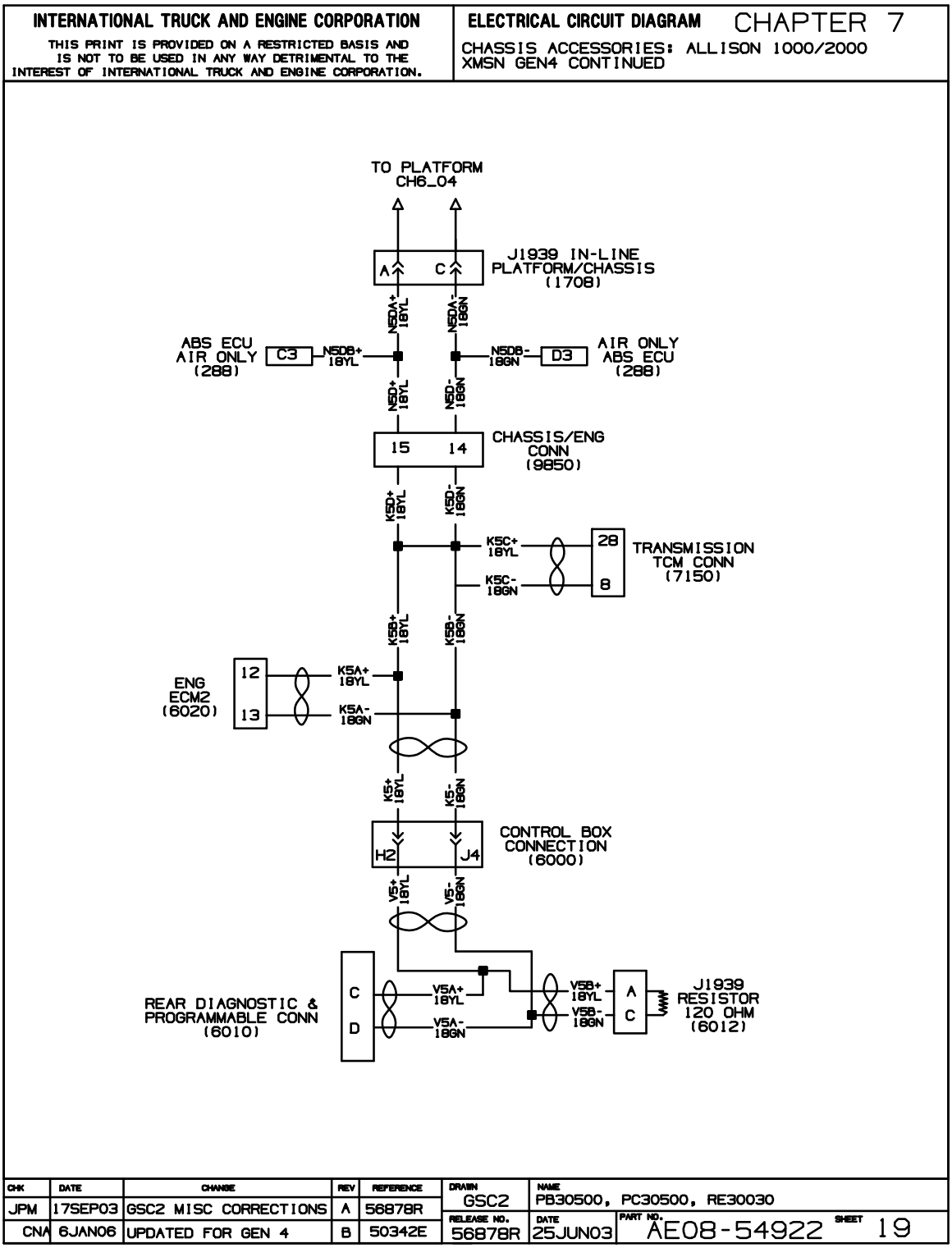

Figure 46 Allison 1000/2000 Transmission Gen 4

Antilock Brake System — Hydraulic Gen 4, p. 20

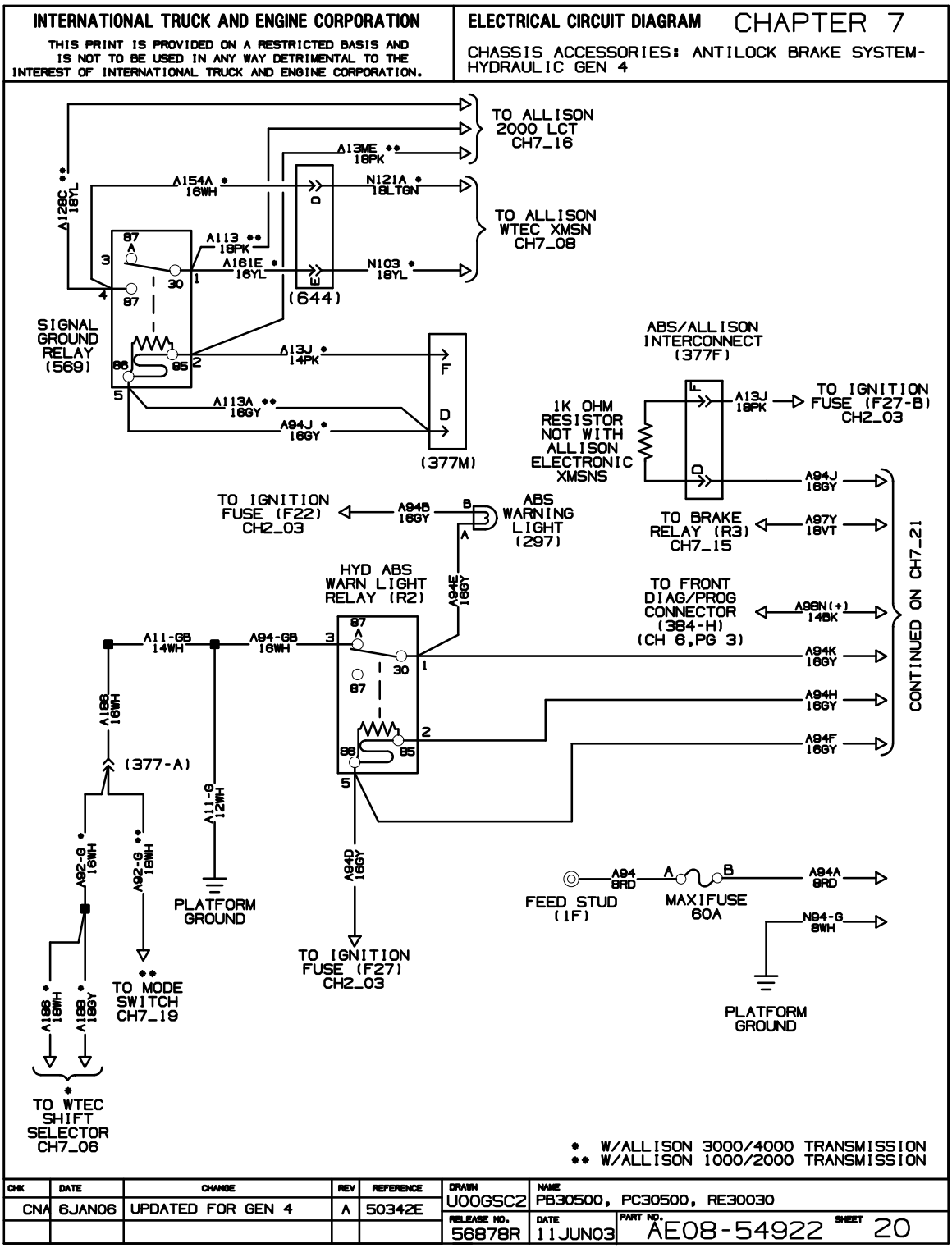

Figure 47 Antilock Brake System — Hydraulic Gen 4

Antilock Brake System — Hydraulic (Cont.), p. 21

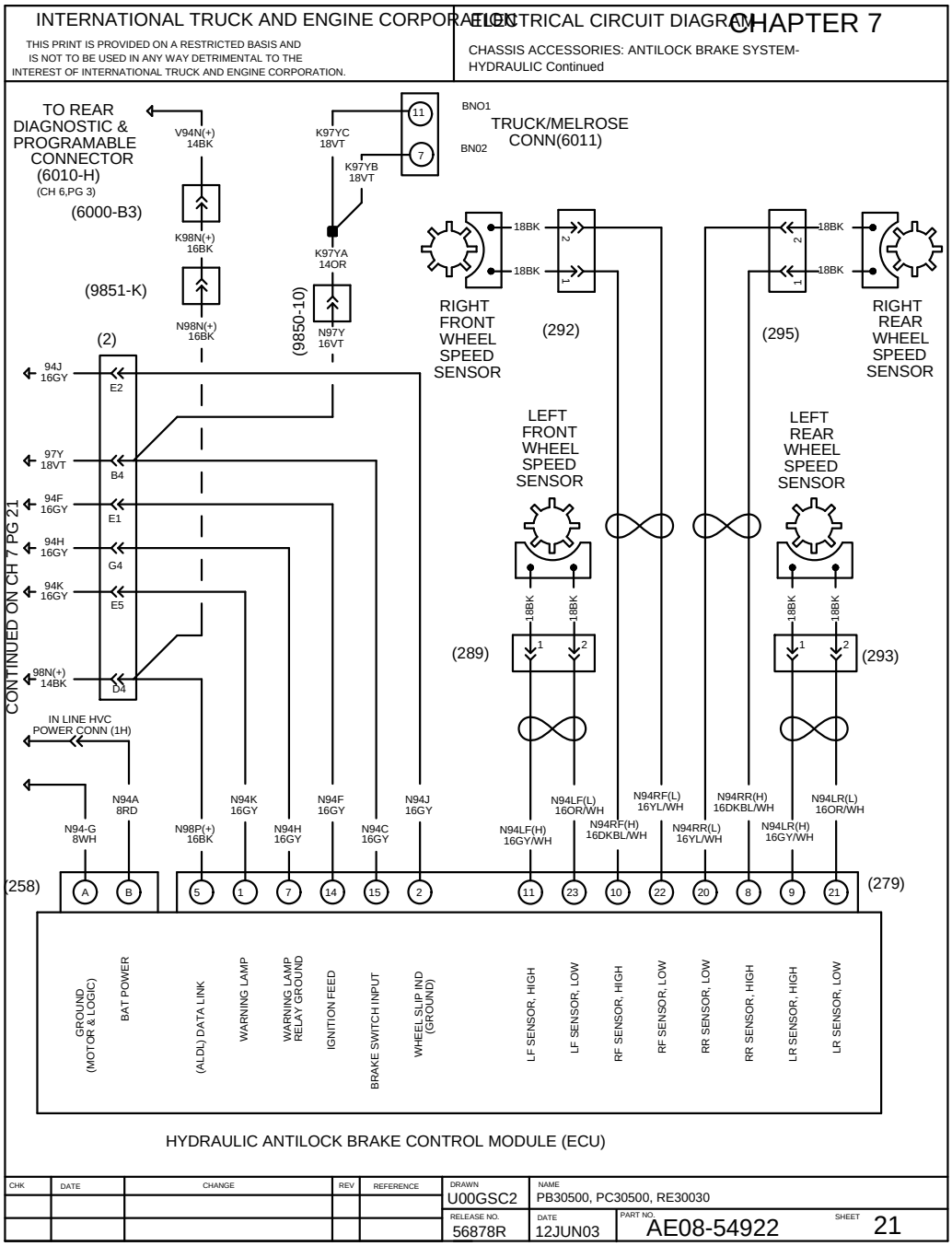

Figure 48 Antilock Brake System — Hydraulic (Cont.)

Brake System — Hydraulic, p. 22

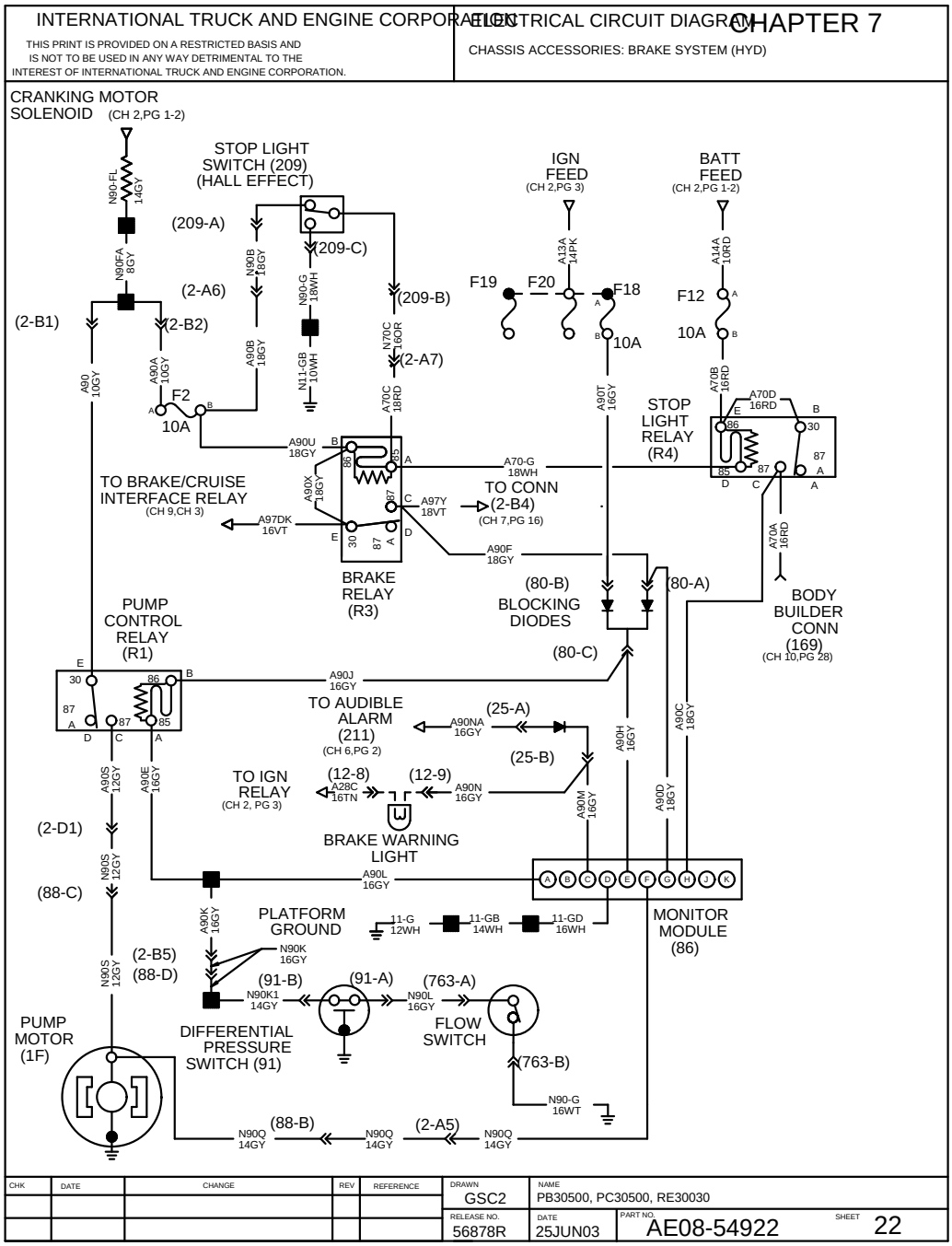

Figure 49 Brake System — Hydraulic

Fuller Manual Transmission, p. 23

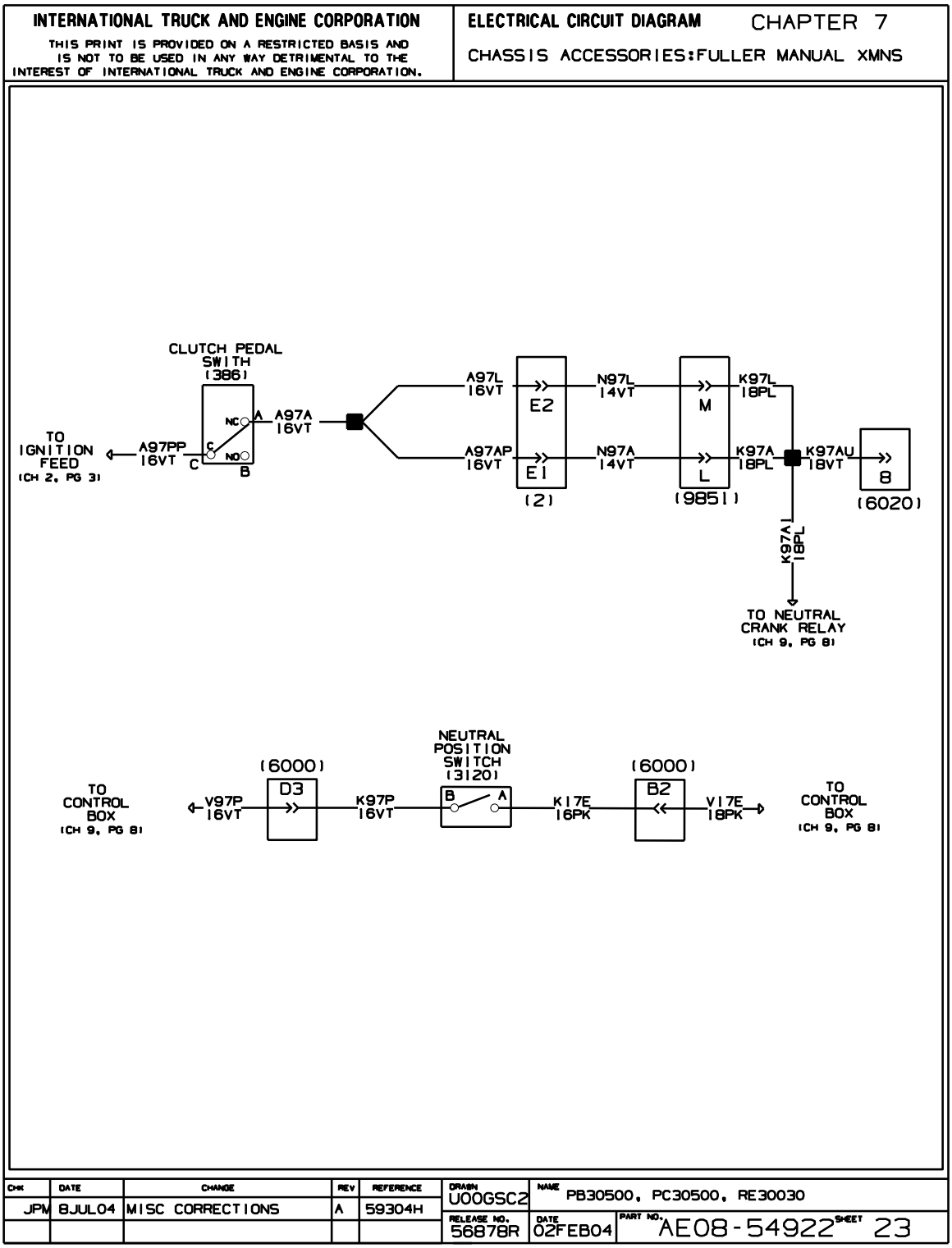

Figure 50 Fuller Manual Transmission

Park Brake Lift Interlock, p. 24

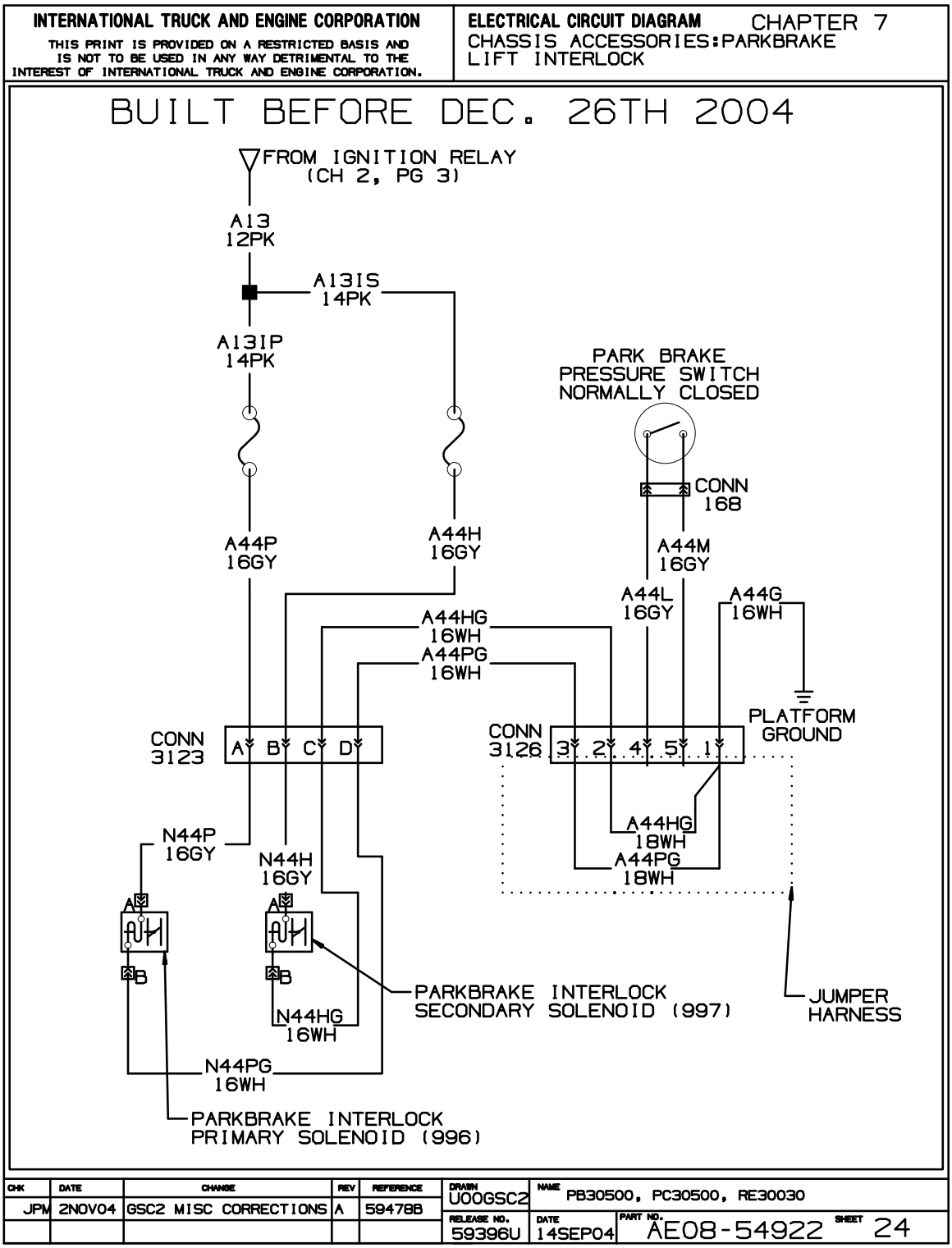

Figure 51 Park Brake Lift Interlock

ABS6 — Bendix Air, p. 25

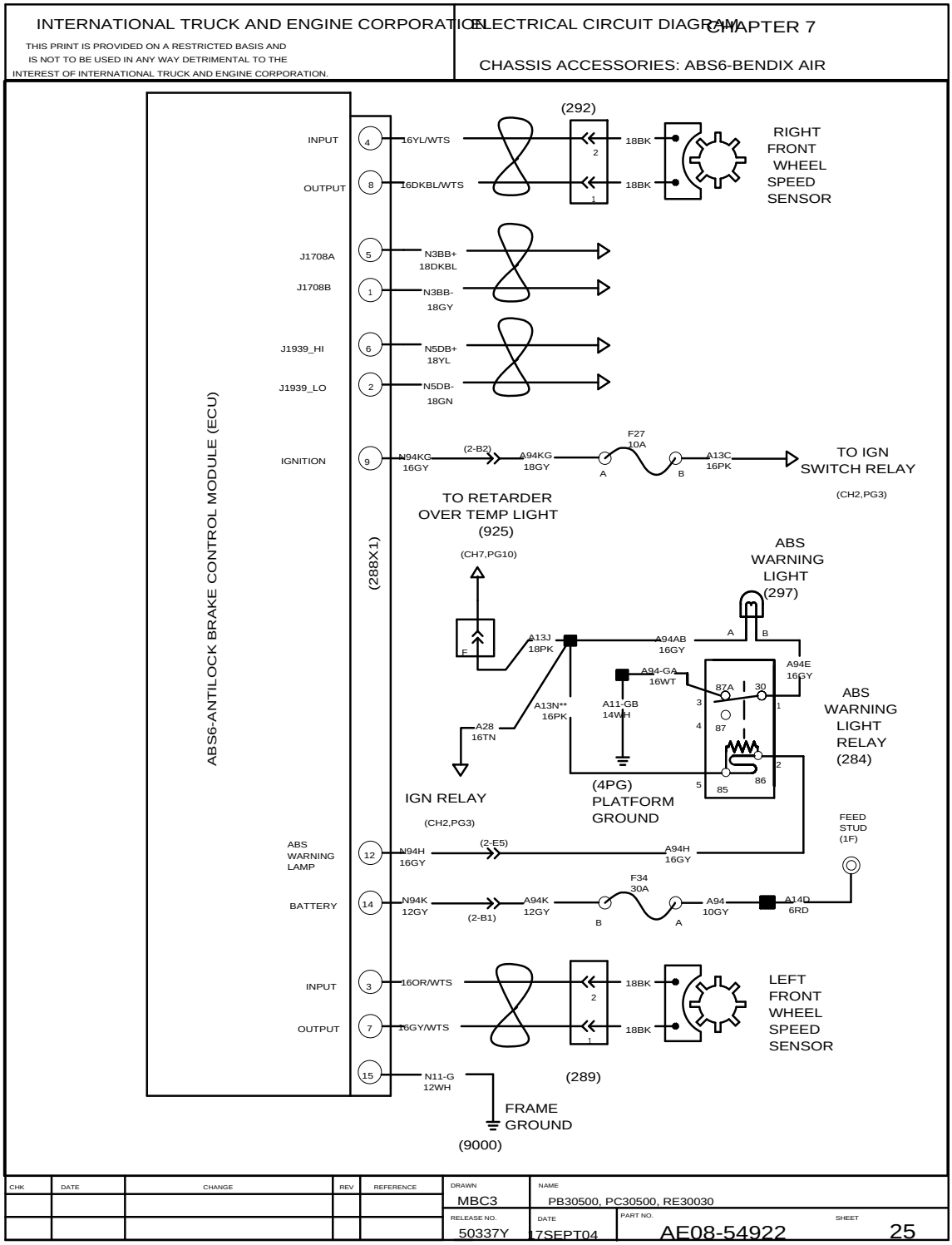

Figure 52 ABS6 — Bendix Air

ABS6 — Bendix Air, p. 26

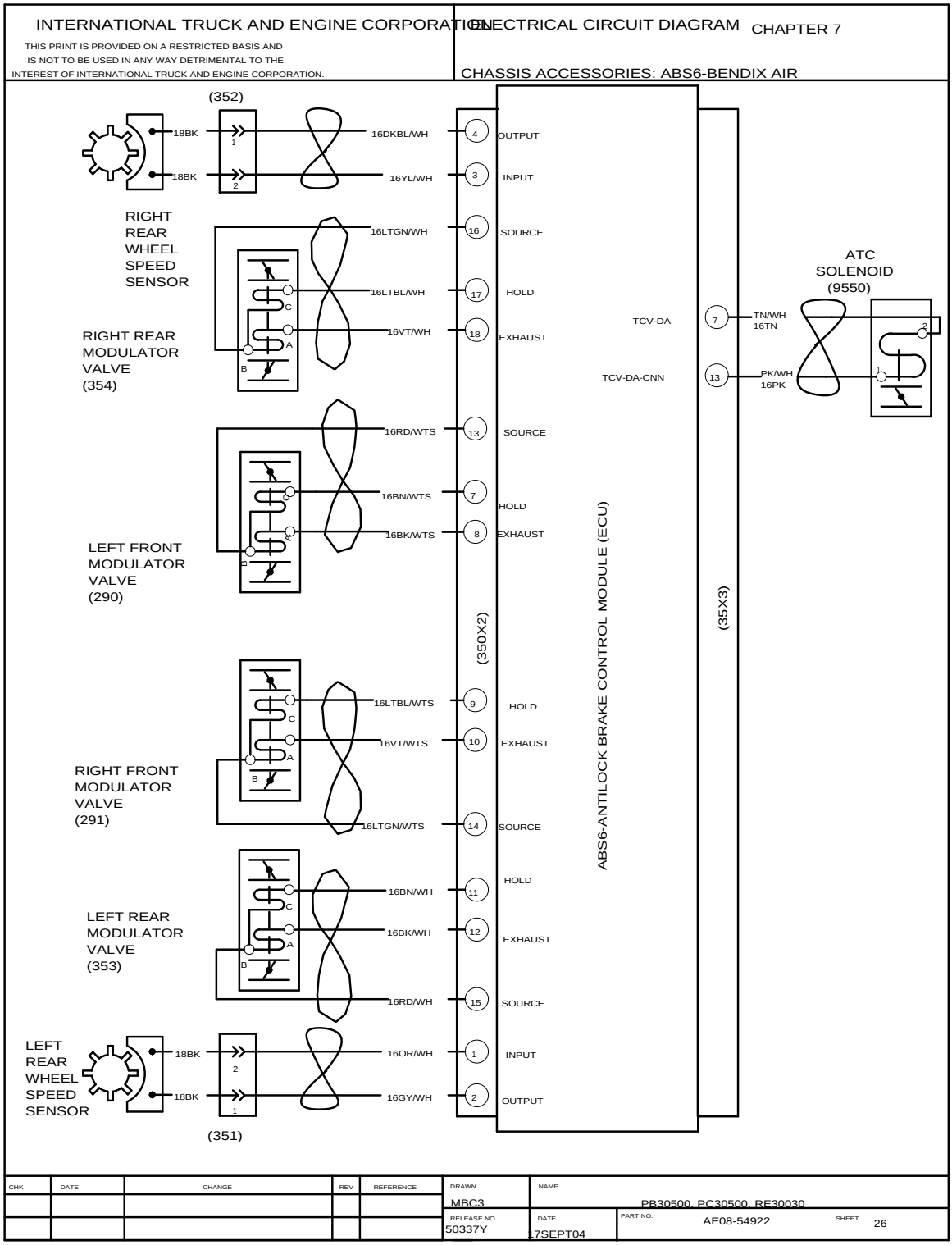

Figure 53 ABS6 — Bendix Air

Park Brake and Lift Interlock, p. 27

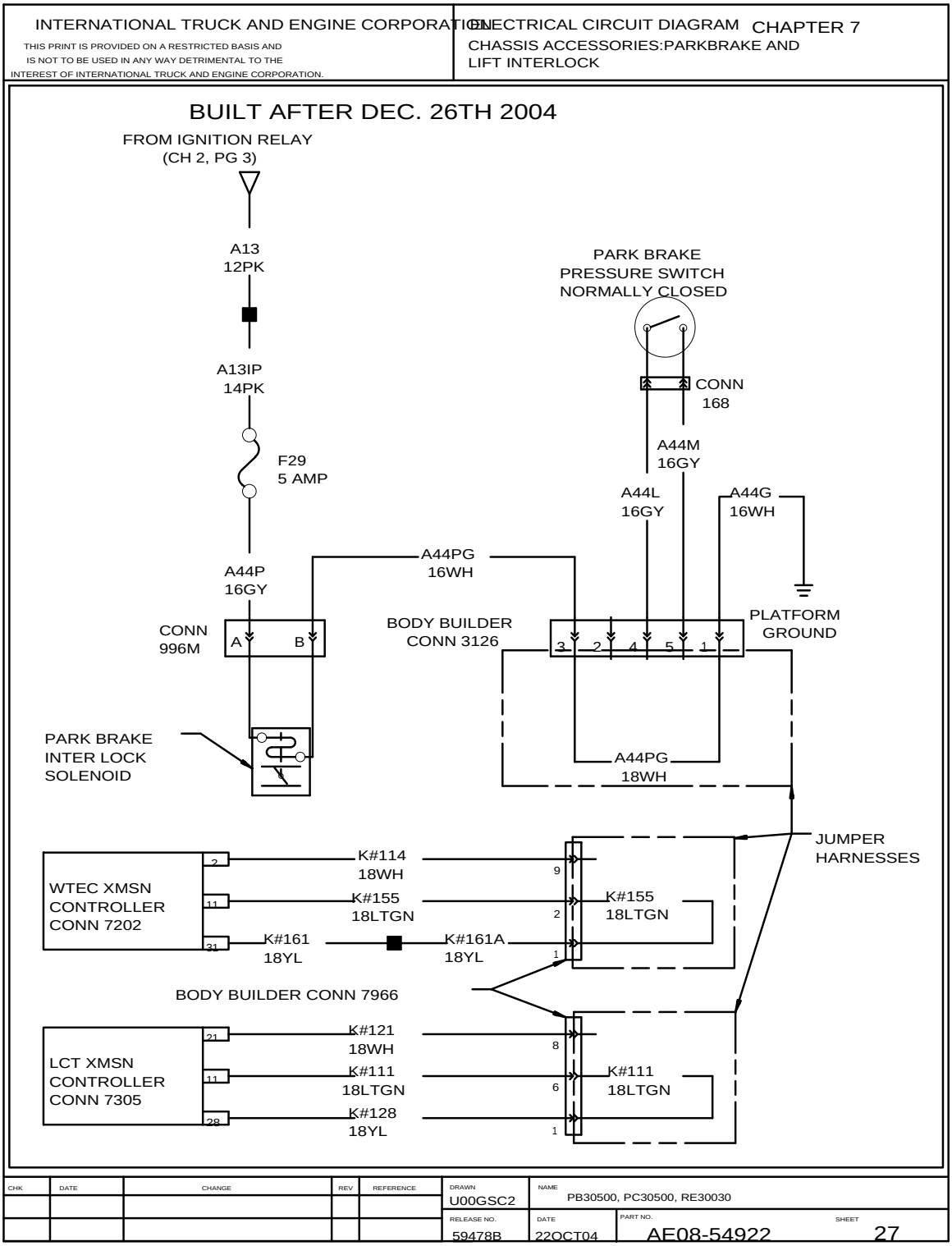

Figure 54 Park Brake and Lift Interlock

Allison WTEC XMSN Gen 4 for Clean Power, p. 28

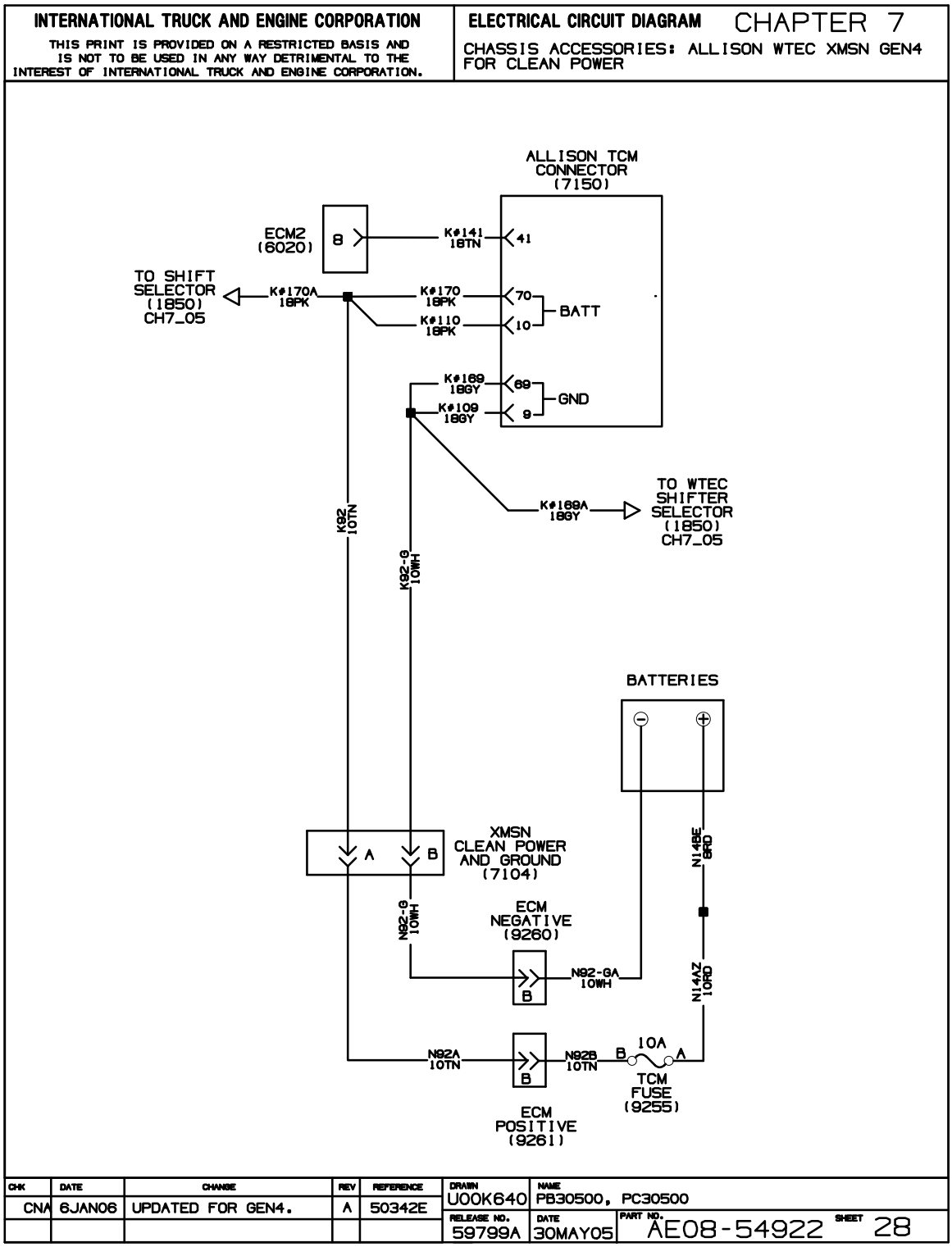

Figure 55 Allison WTEC XMSN Gen 4 for Clean Power

Allison 1000/2000 XMSN Gen 4 for Clean Power, p. 29

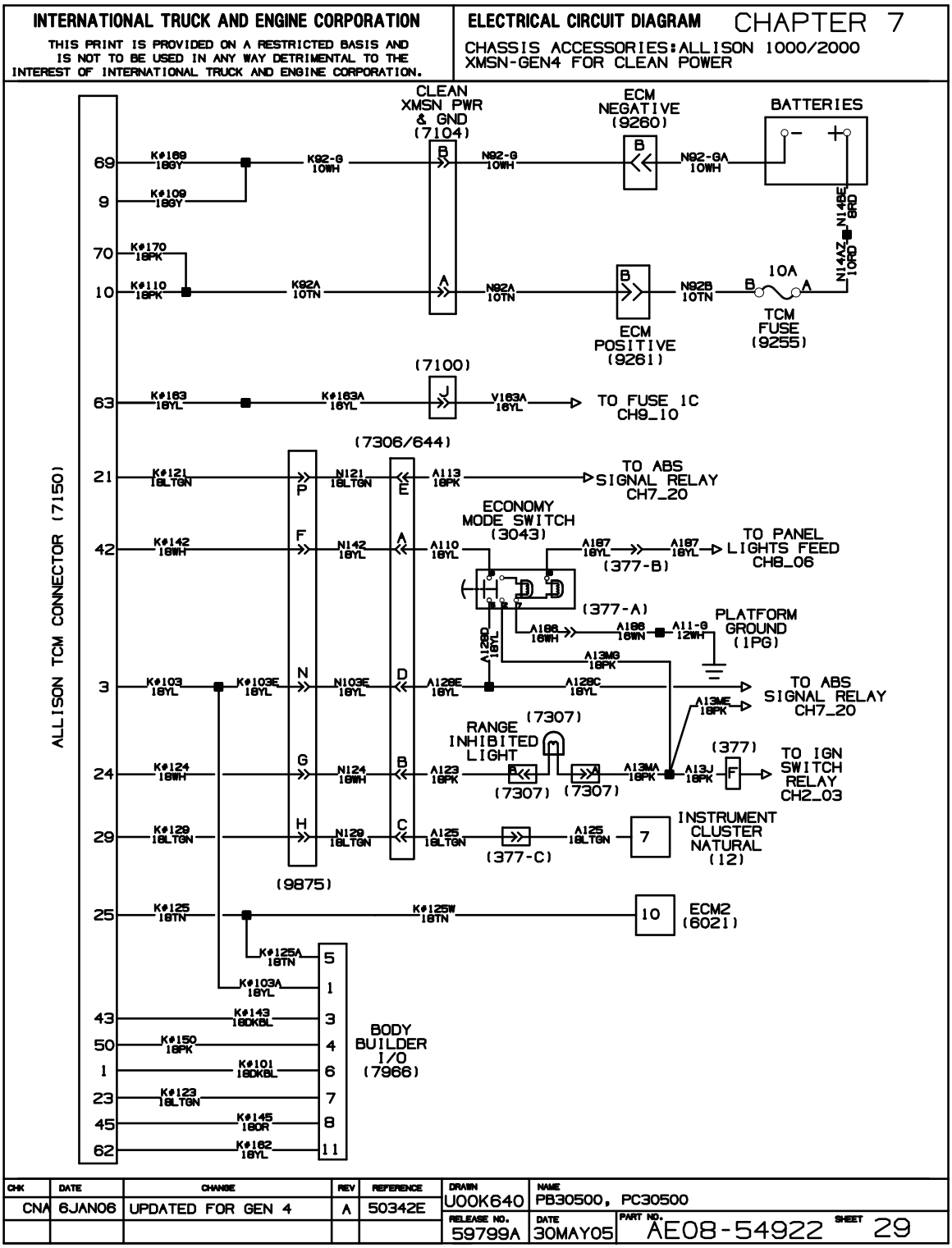

Figure 56 Allison 1000/2000 XMSN Gen 4 for Clean Power

1.8. LIGHT SYSTEMS (CHAPTER 8)

Back-Up Light System Allison Gen 4, p. 1

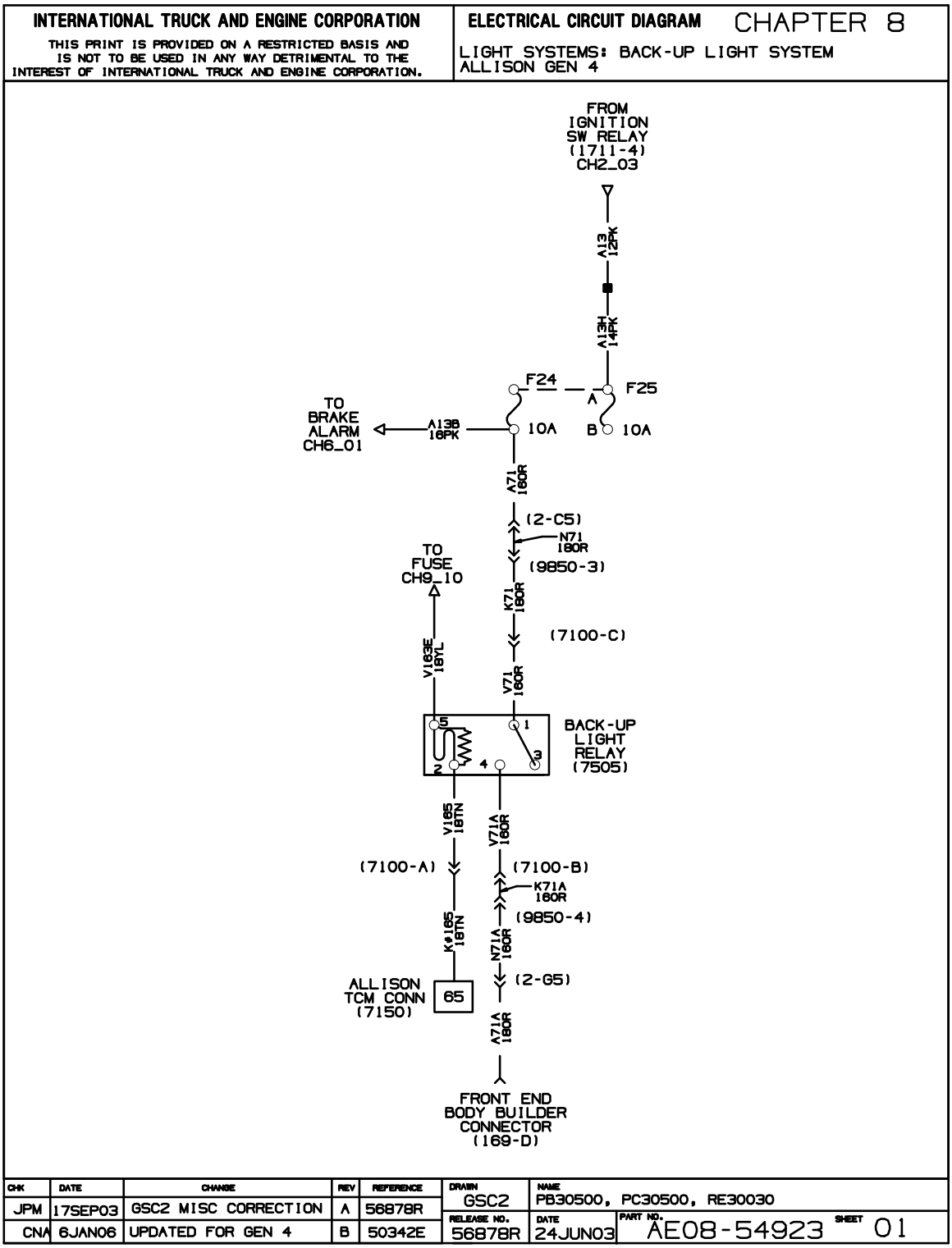

Figure 57 Back-Up Light System Allison Gen 4

Headlight System With Douglas Turn Signal Switch (Tilt Column), p. 2

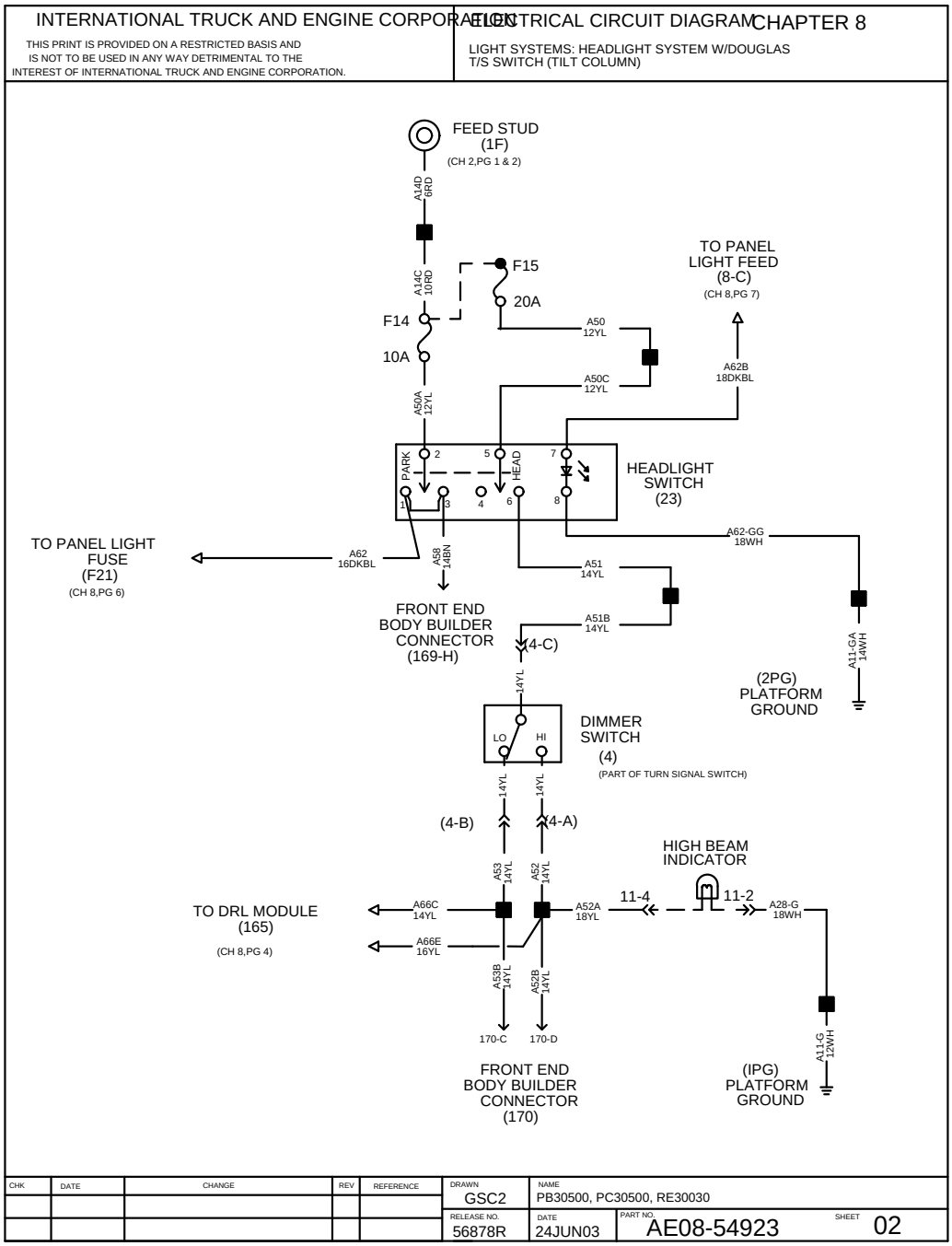

Figure 58 Headlight System With Douglas Turn Signal Switch (Tilt Column)

Headlight System With International Turn Signal Switch (Stationary Column), p. 3

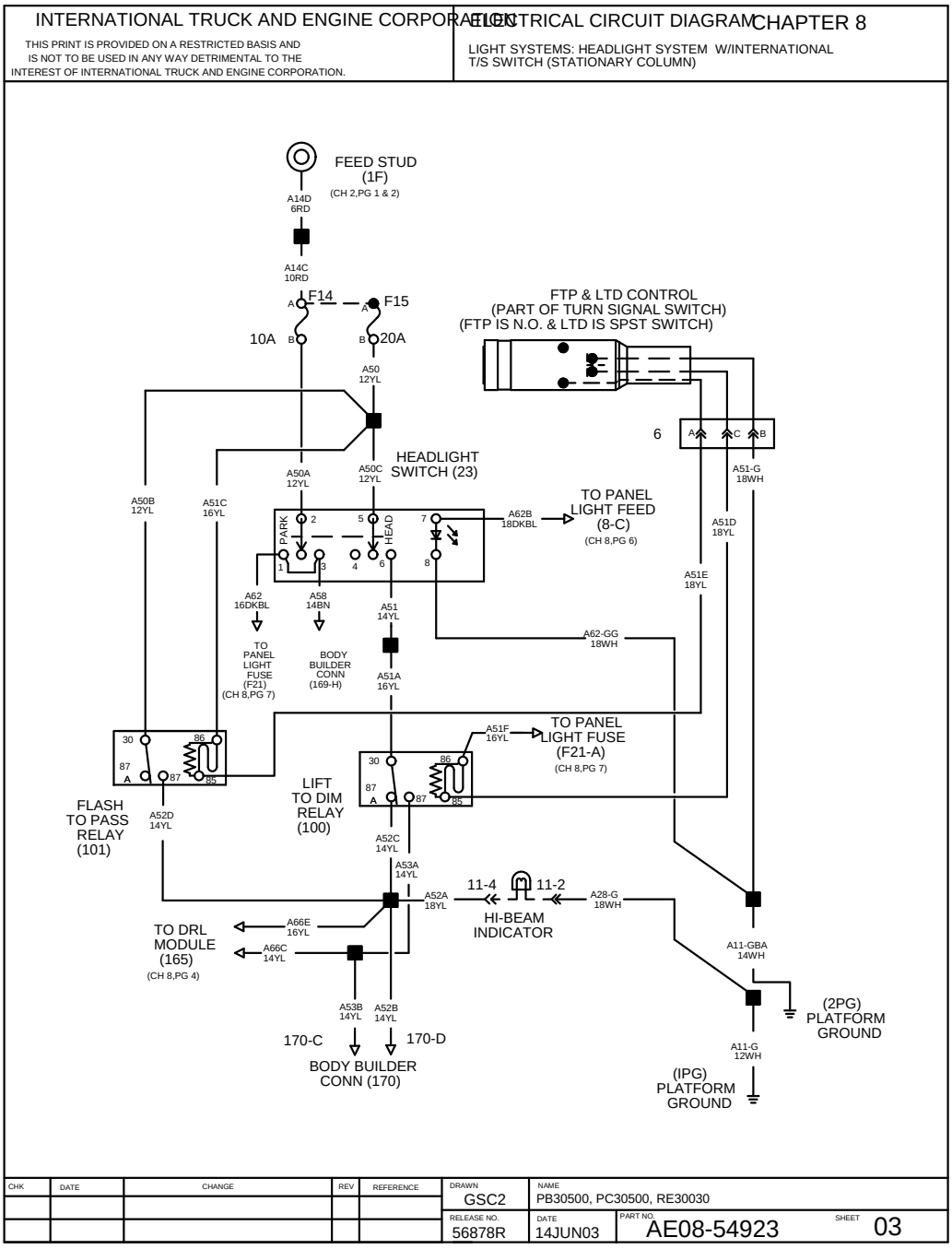

Figure 59 Headlight System With International Turn Signal Switch (Stationary Column)

Daytime Running Lights With Douglas or International Turn Signal Switch, p. 4

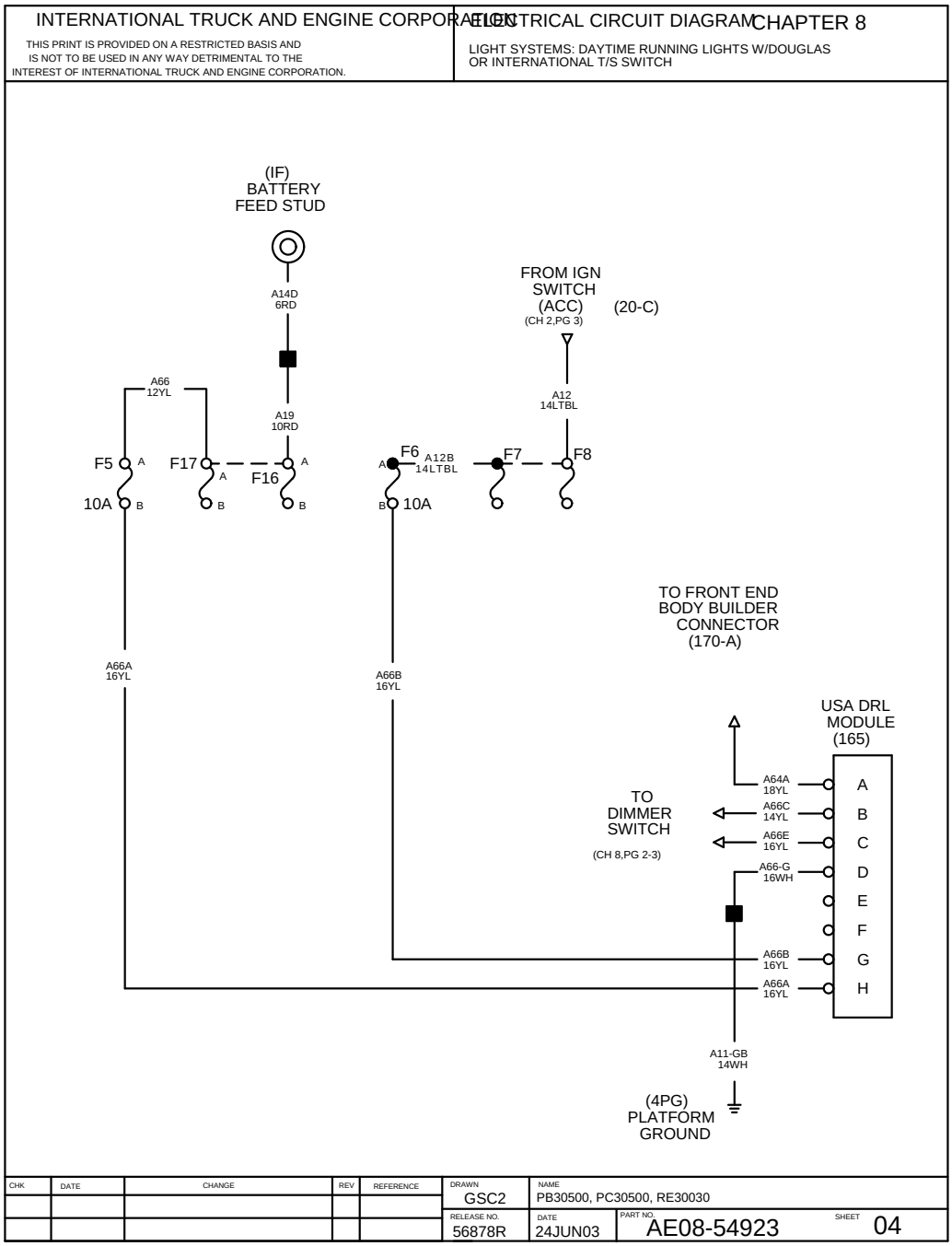

Figure 60 Daytime Running Lights With Douglas or International Turn Signal Switch

Stoplight Switch With Air Brakes, p. 5

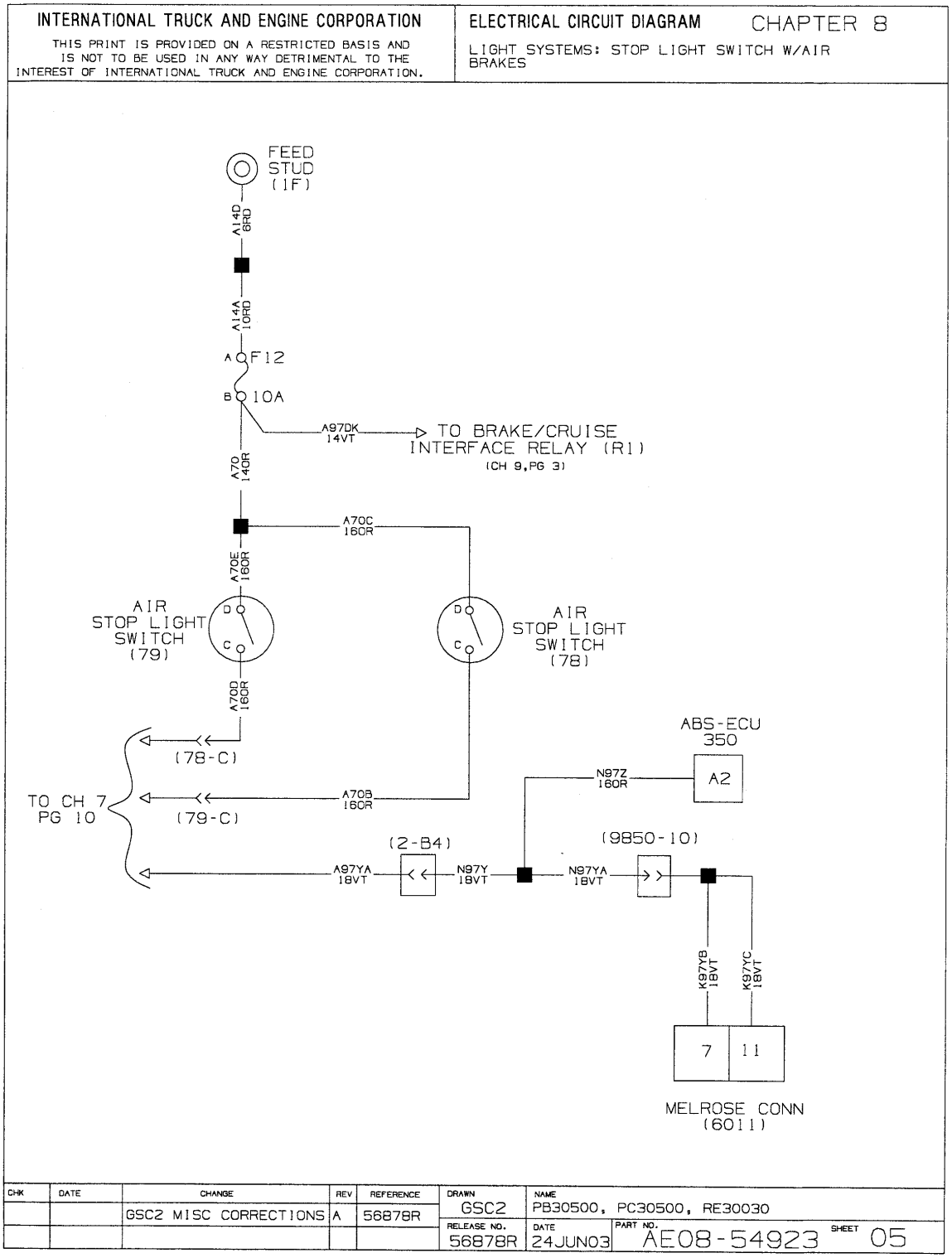

Figure 61 Stoplight Switch With Air Brakes

Panel Lights, p. 6

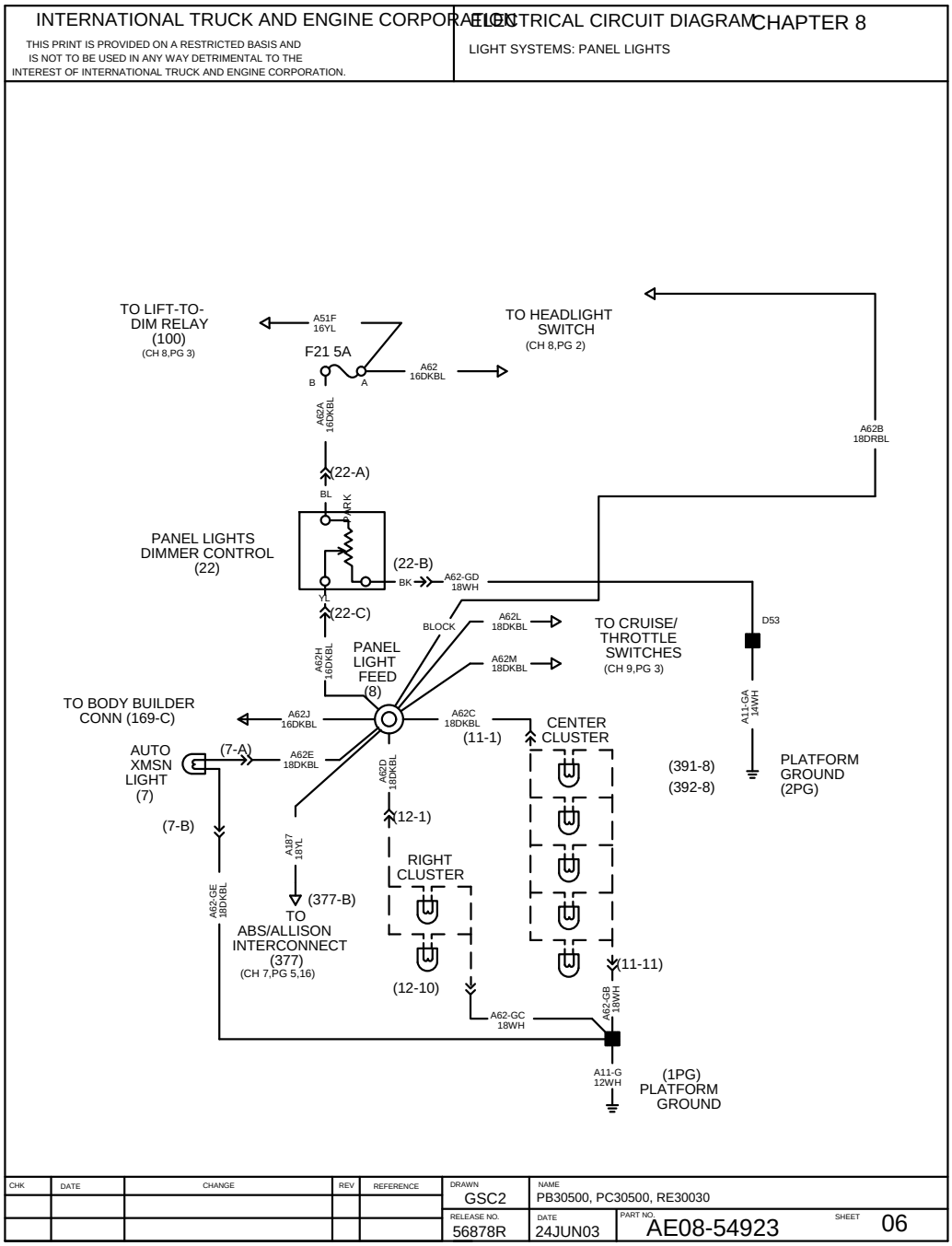

Figure 62 Panel Lights

Daytime Running Lights with Engine Running Only, p. 7

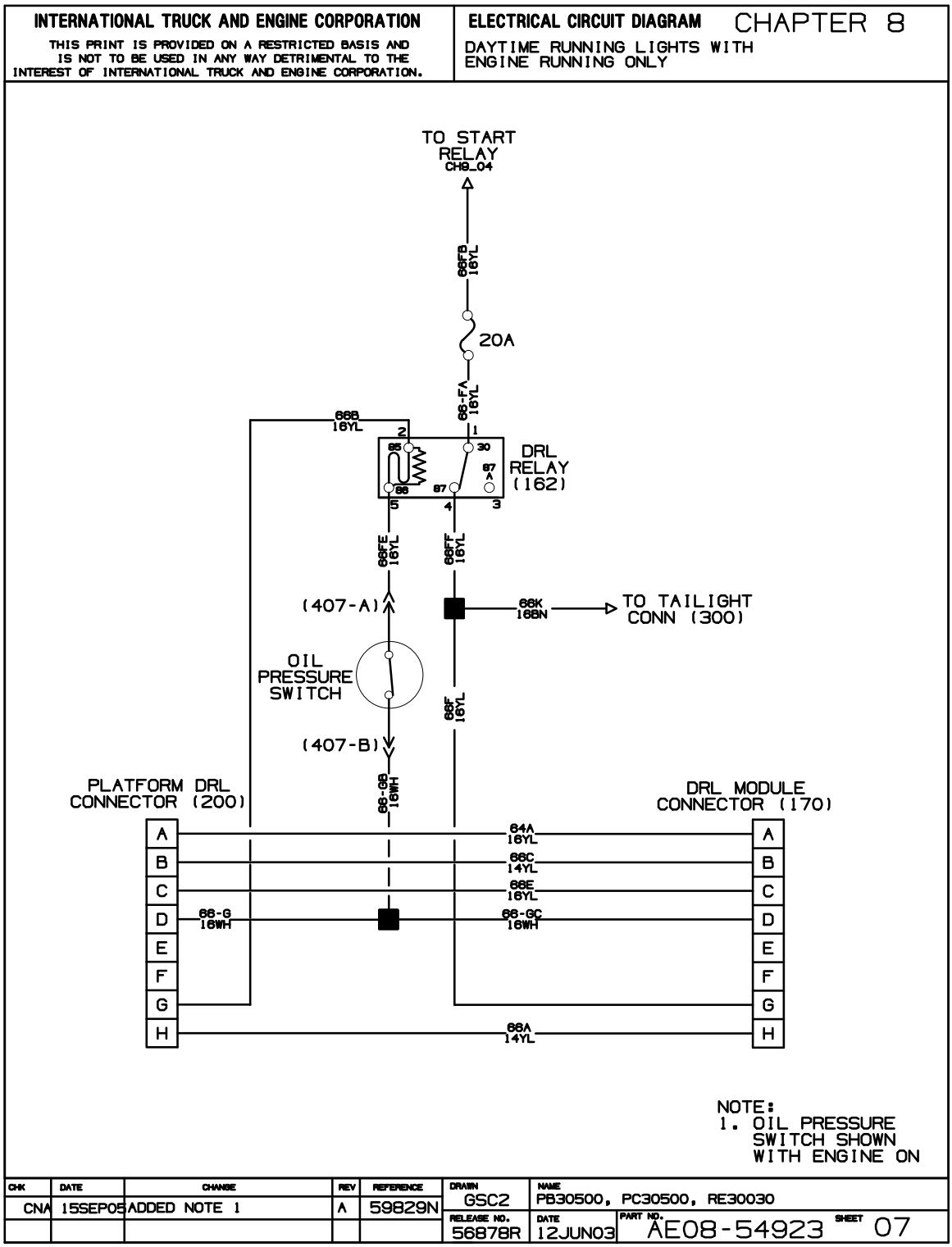

Figure 63 Daytime Running Lights with Engine Running Only

Back-Up Light System, p. 8

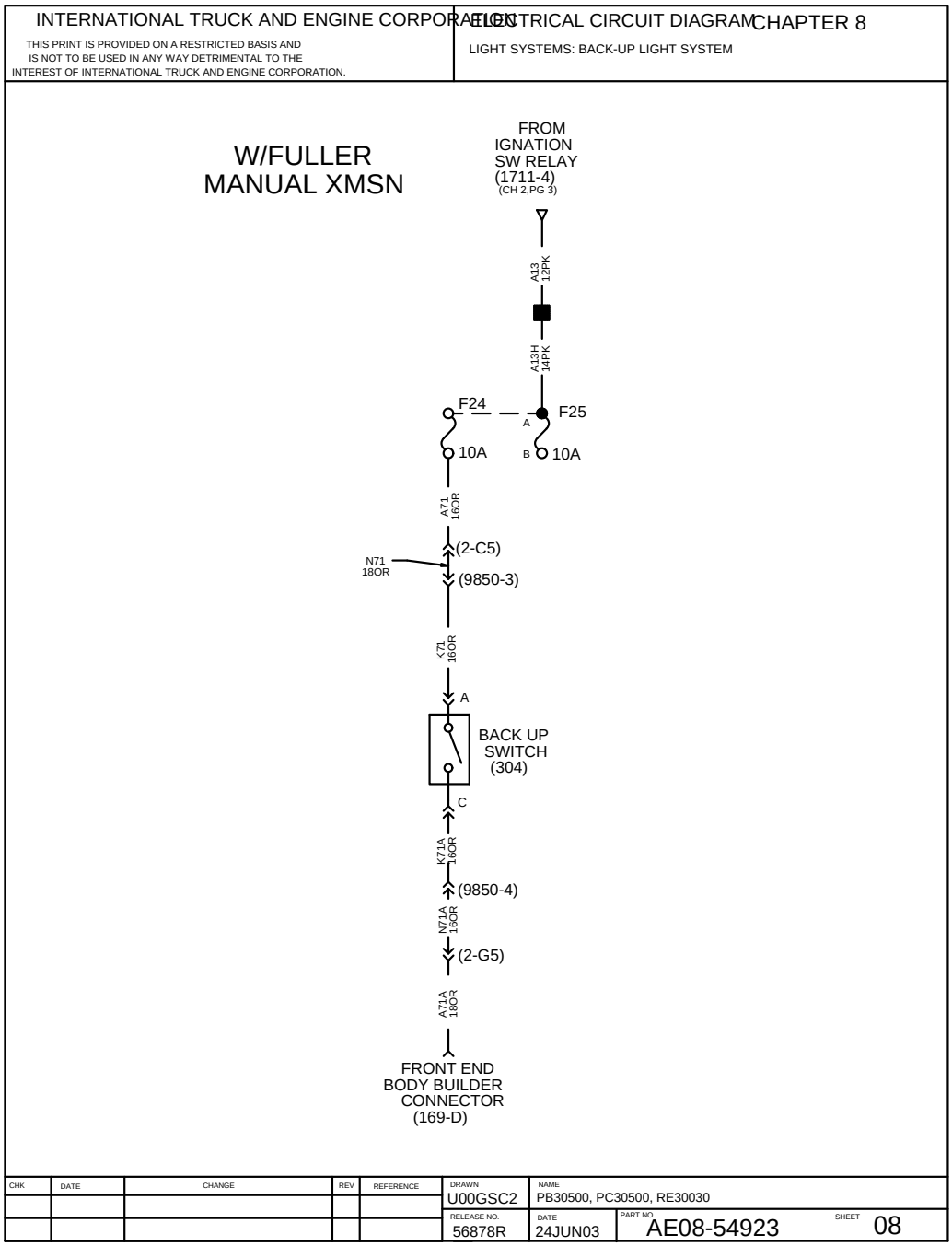

Figure 64 Back-Up Light System

Daytime Running Lights with Engine Running Only, p. 9

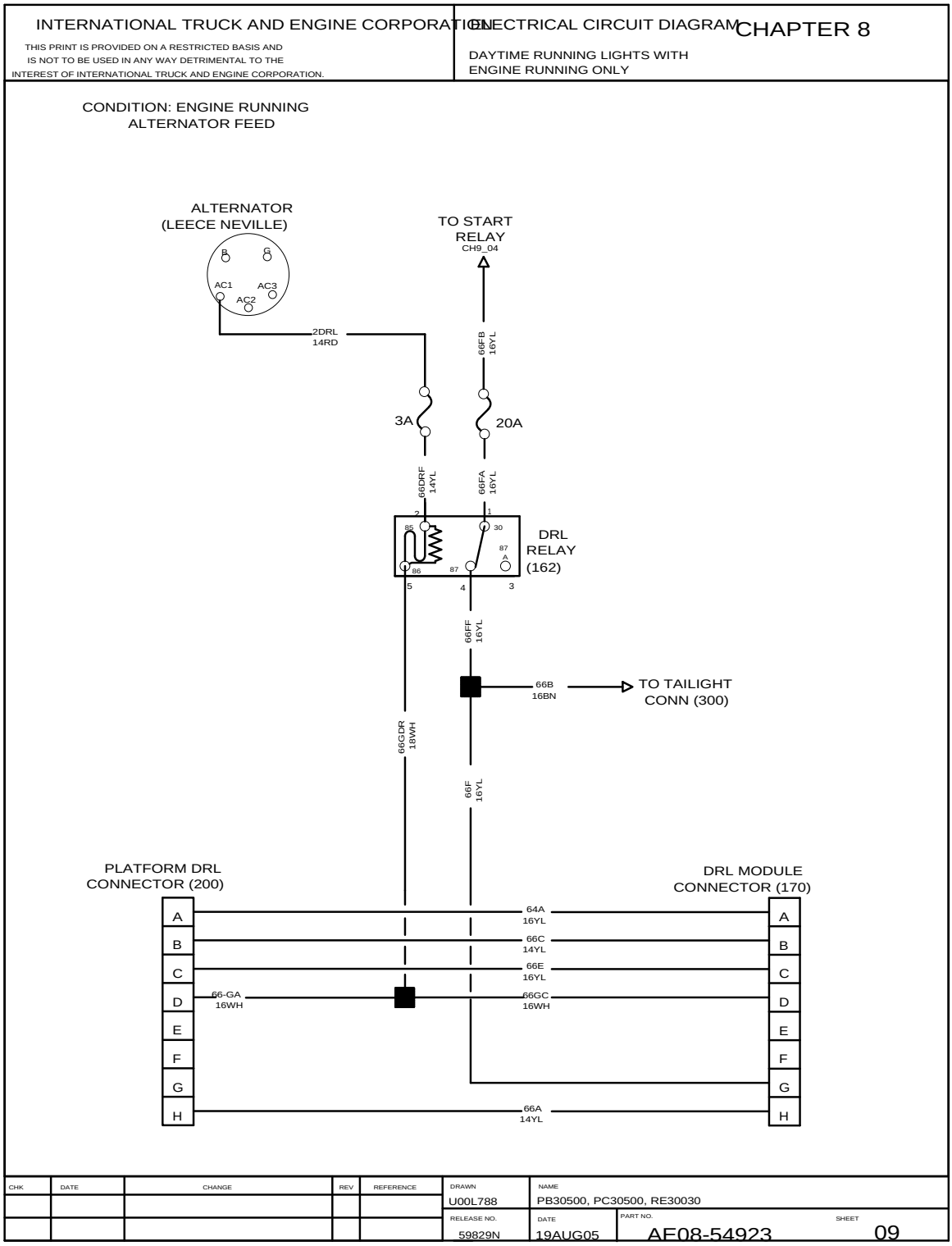

Figure 65 Daytime Running Lights with Engine Running Only

Daytime Running Lights with Engine Running Only, p. 10

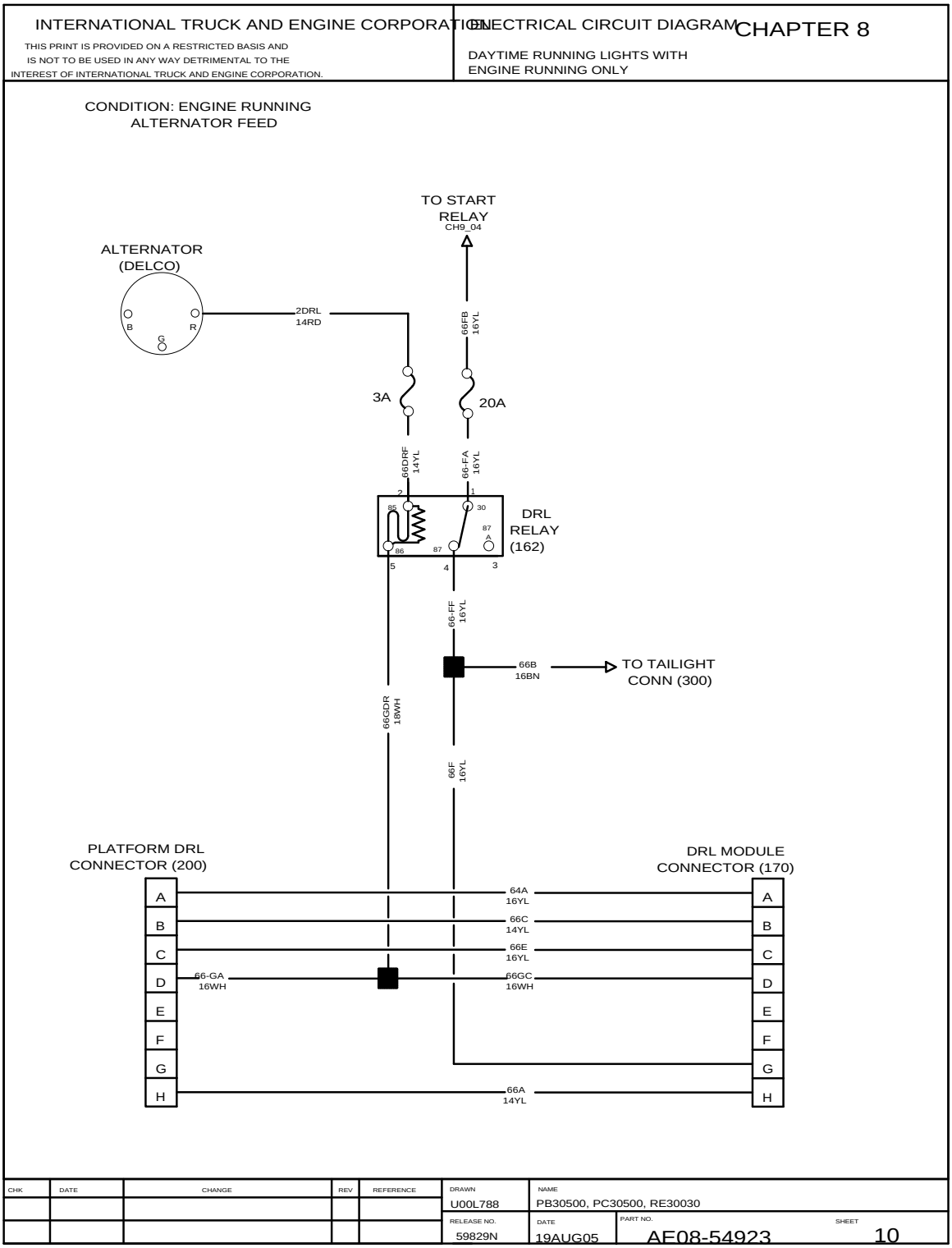

Figure 66 Daytime Running Lights with Engine Running Only

1.9. ELECTRONIC ENGINES (CHAPTER 9)

Electronic Engine Controls, p. 1

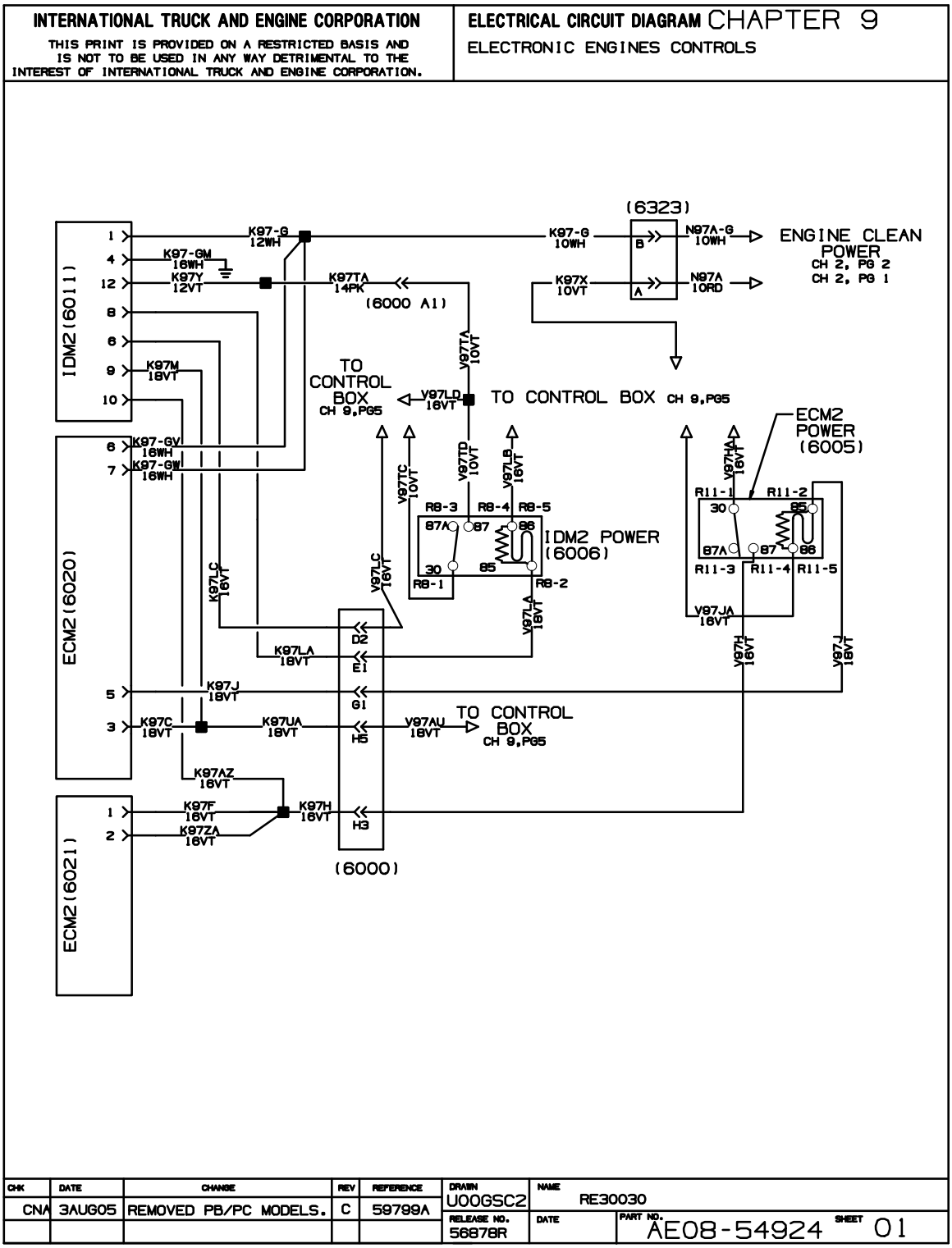

Figure 67 Electronic Engine Controls

Accelerator, BAP and ATS Systems, p. 2

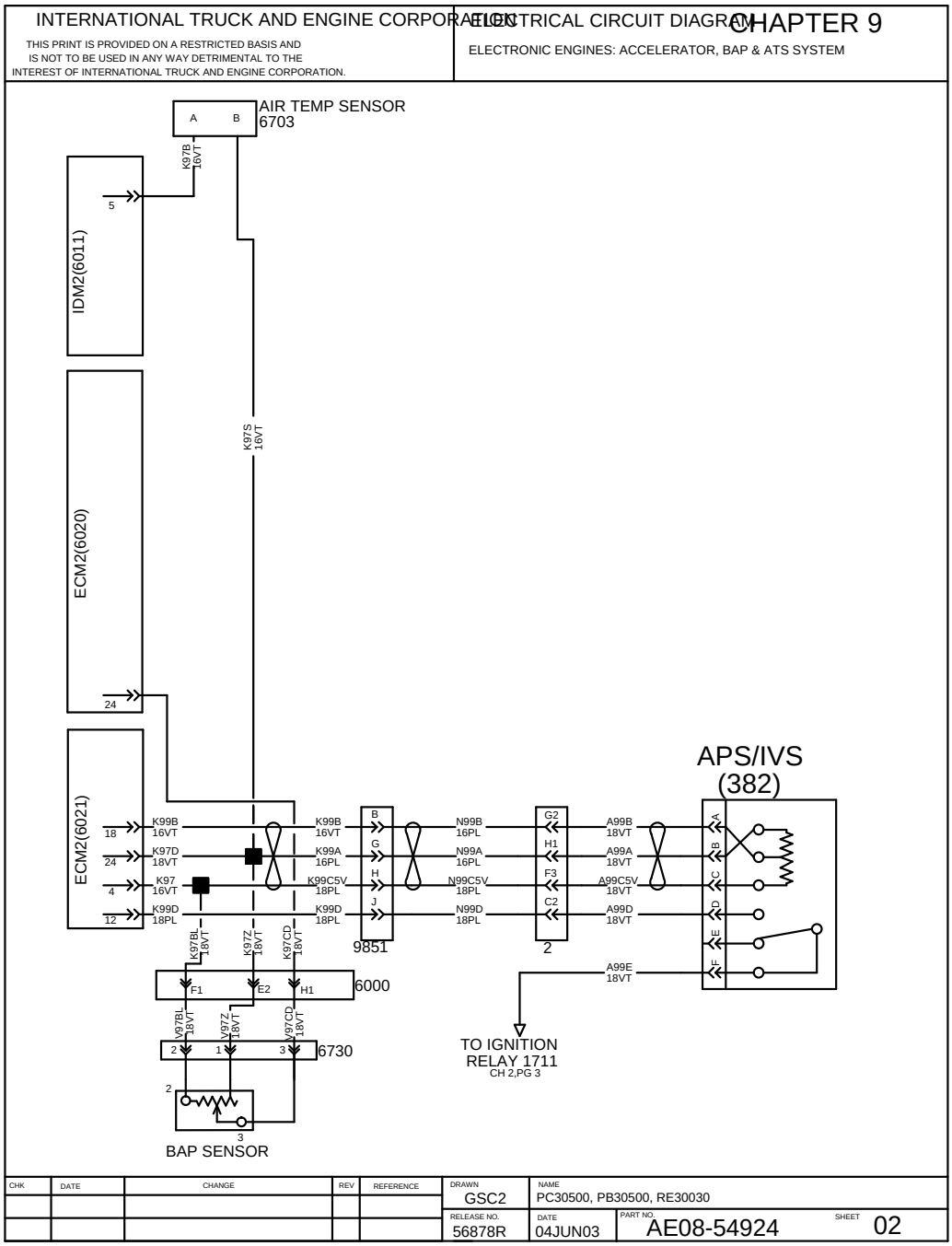

Figure 68 Accelerator, BAP and ATS Systems

Cruise Control and Electronic Hand Throttle System, p. 3

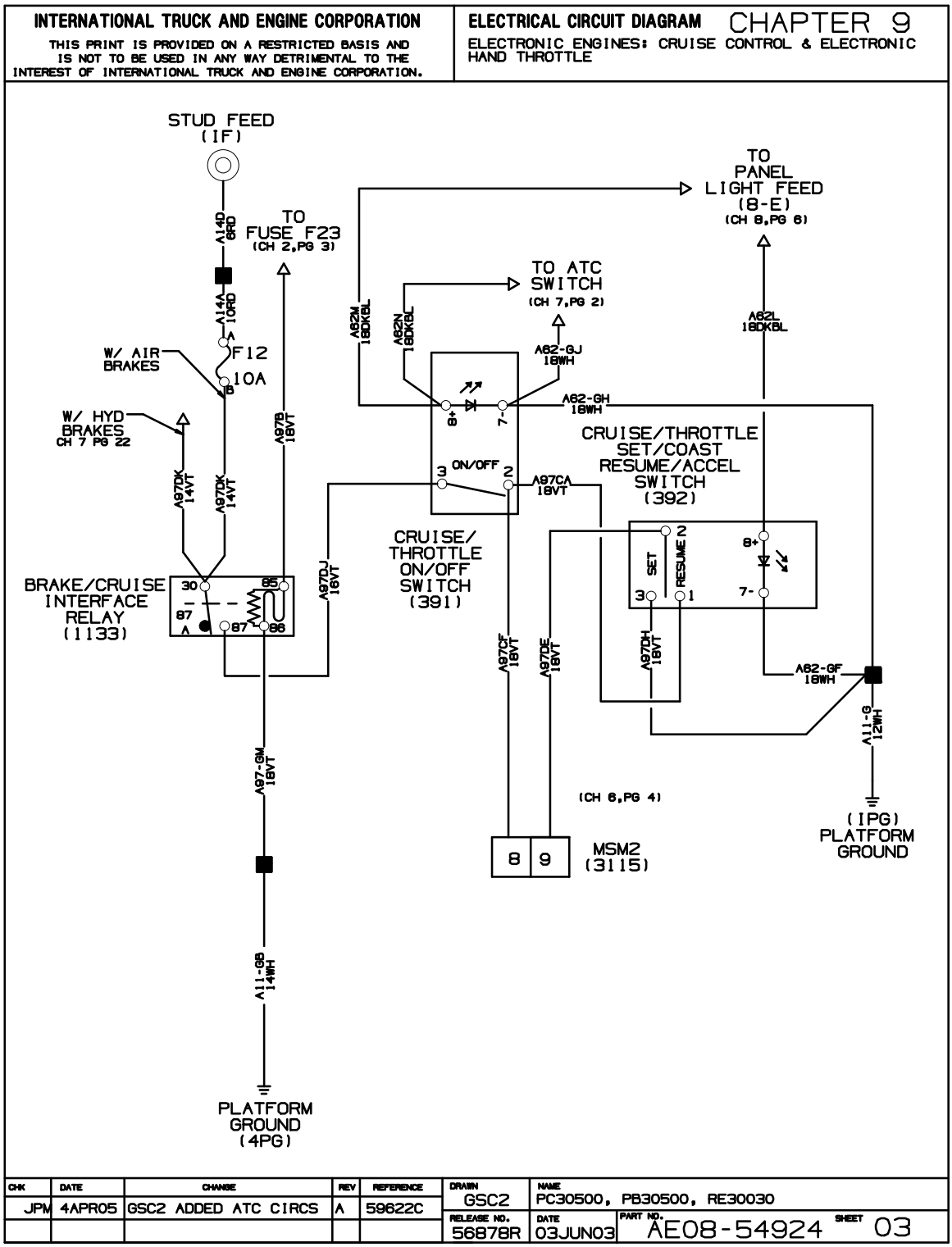

Figure 69 Cruise Control and Electronic Hand Throttle System

Control Box System with Allison 3060 and 2000, p. 4

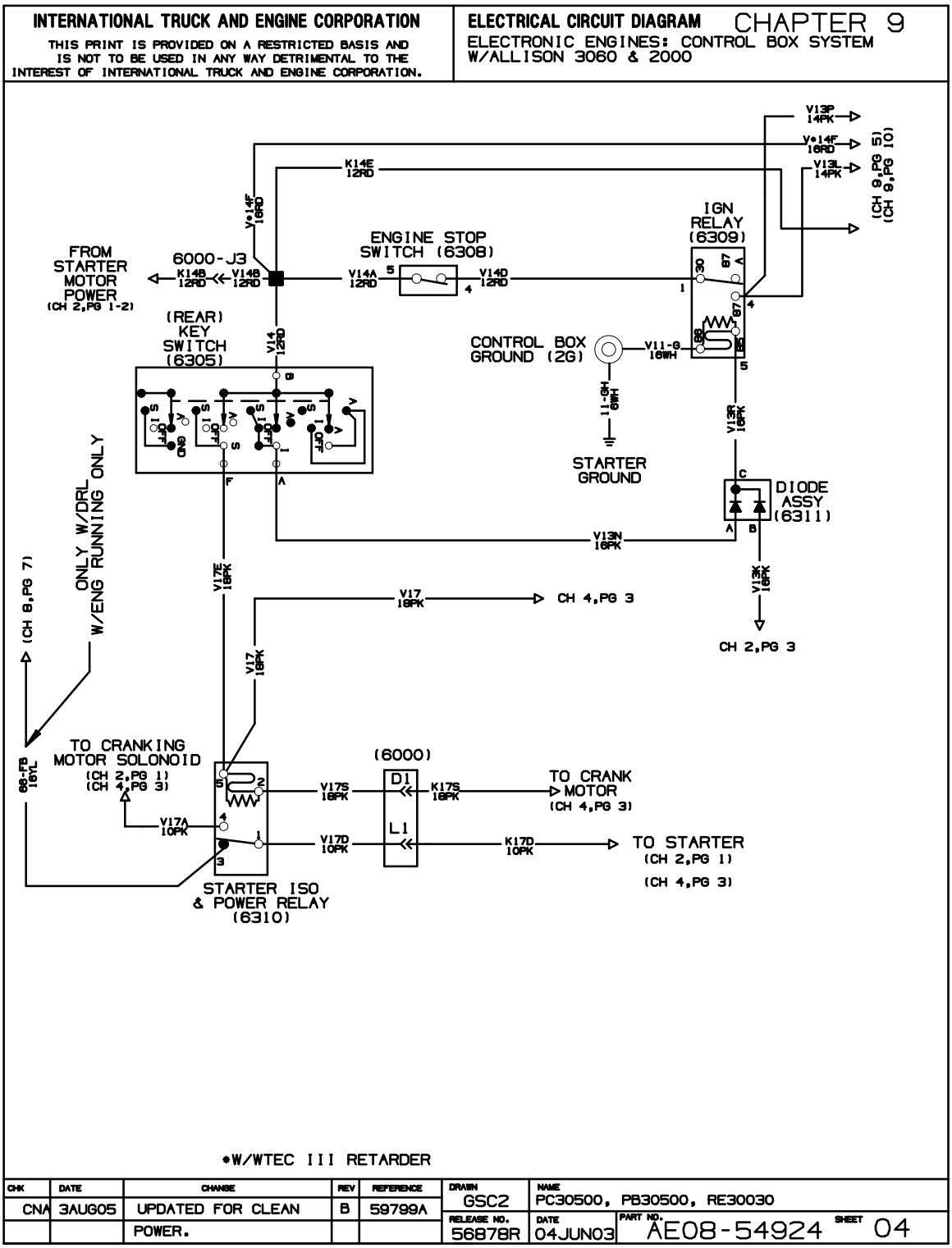

Figure 70 Control Box System with Allison 3060 and 2000

Control Box System (Cont.), p. 5

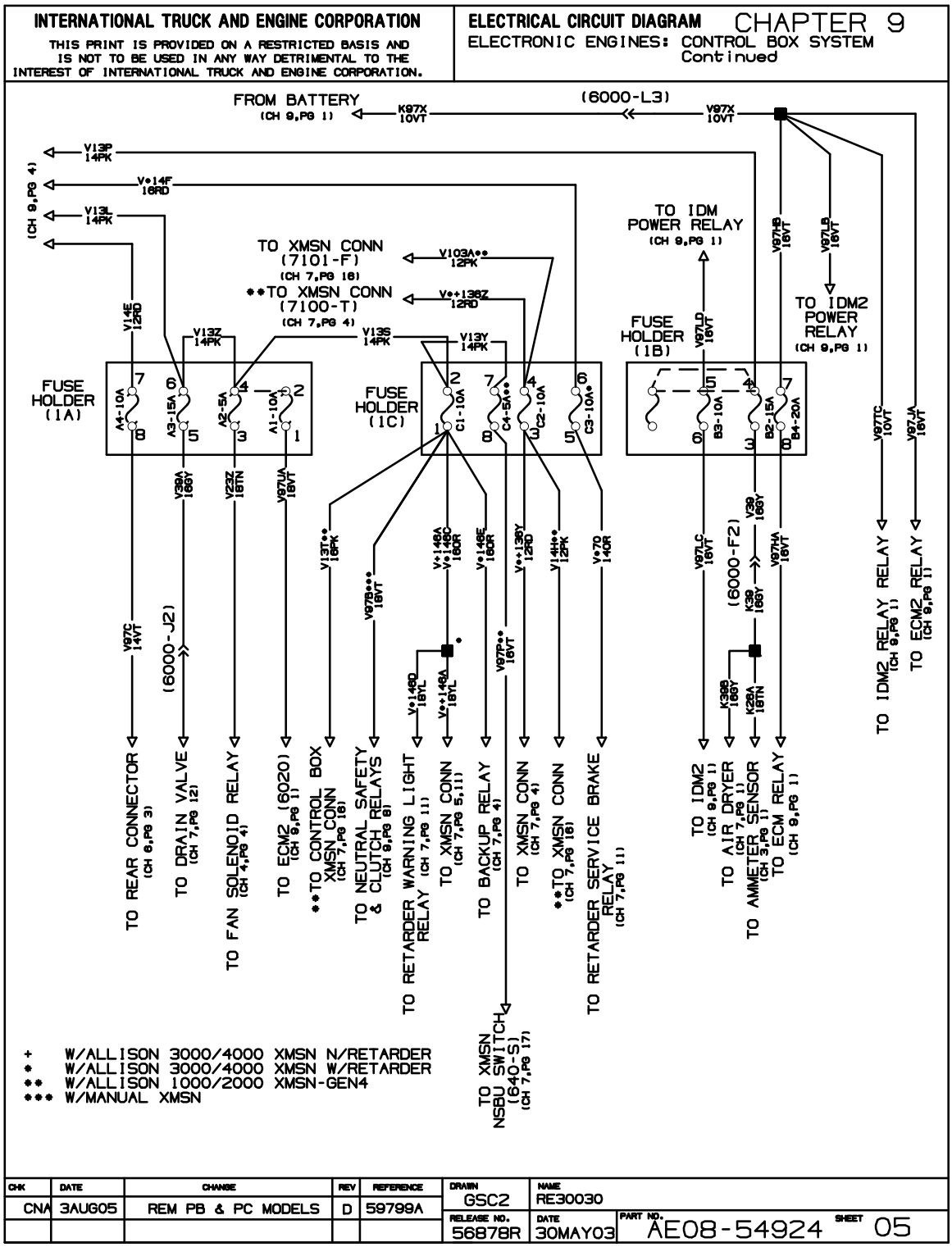

Figure 71 Control Box System (Cont.)

Engine Brakes with WTEC III Transmission and I6 Engine, p. 6

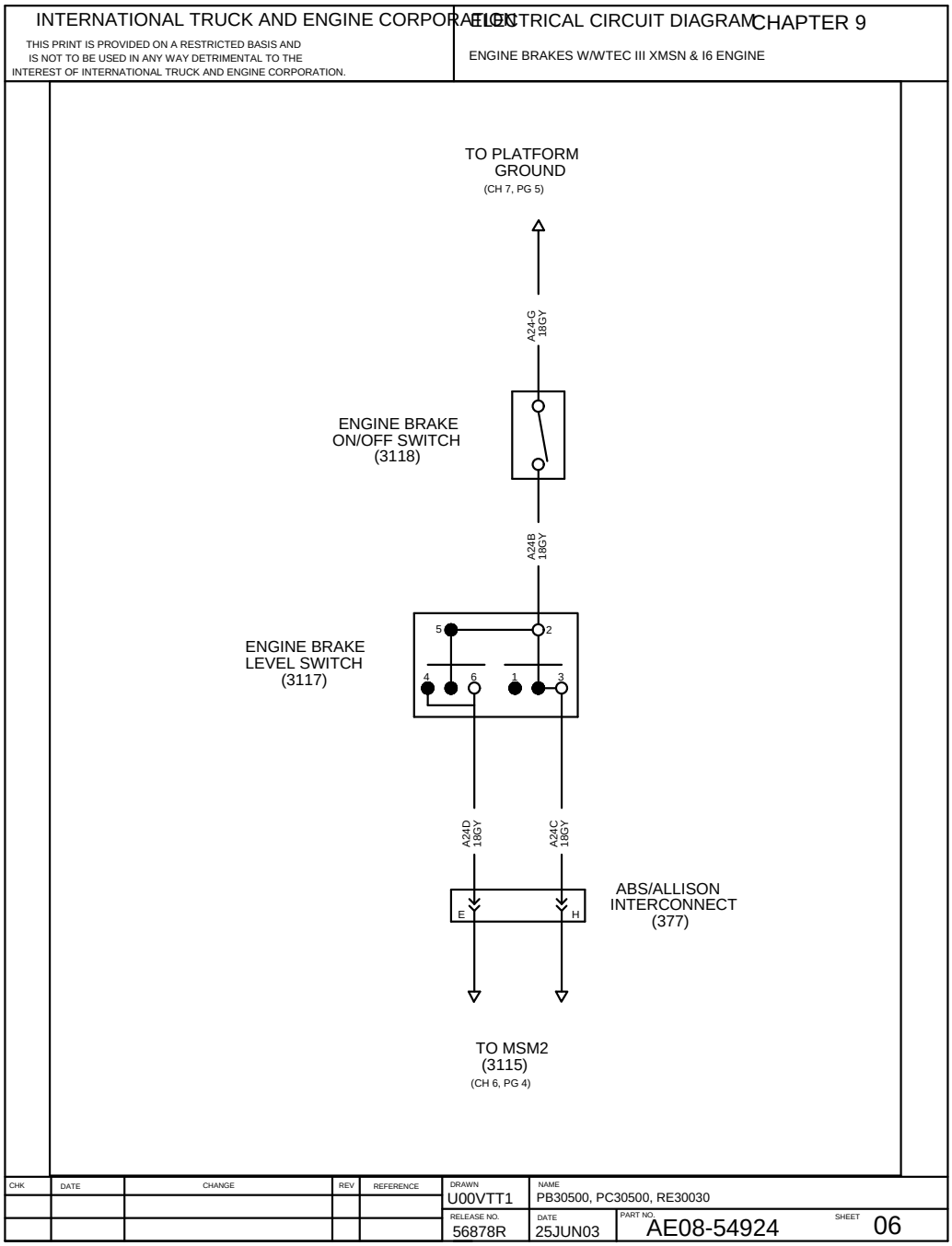

Figure 72 Engine Brakes with WTEC III Transmission and I6 Engine

Exhaust Brakes with WTEC III Transmission and I6 Engine, p. 7

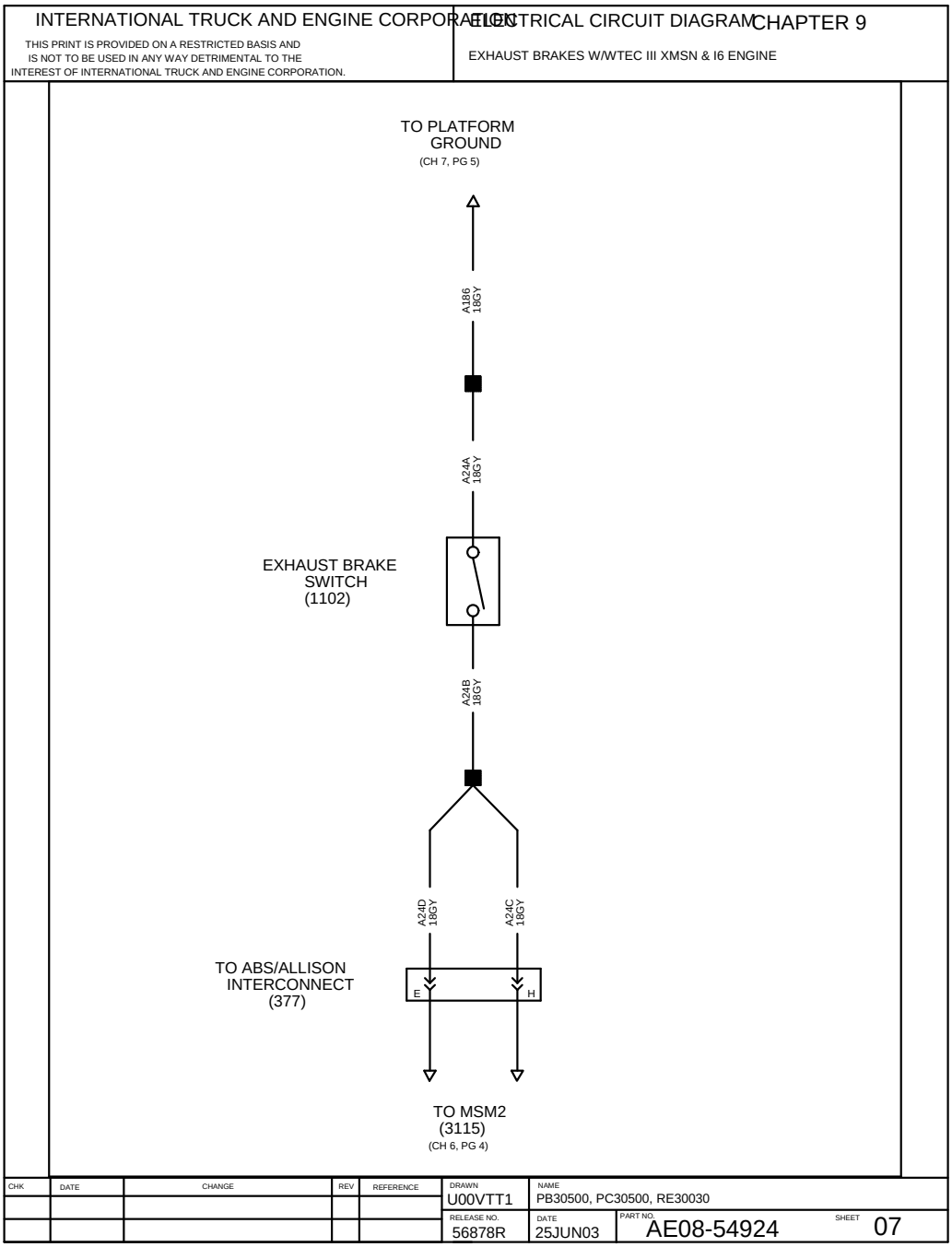

Figure 73 Exhaust Brakes with WTEC III Transmission and I6 Engine

Control Box System with Fuller Manual Transmission, p. 8

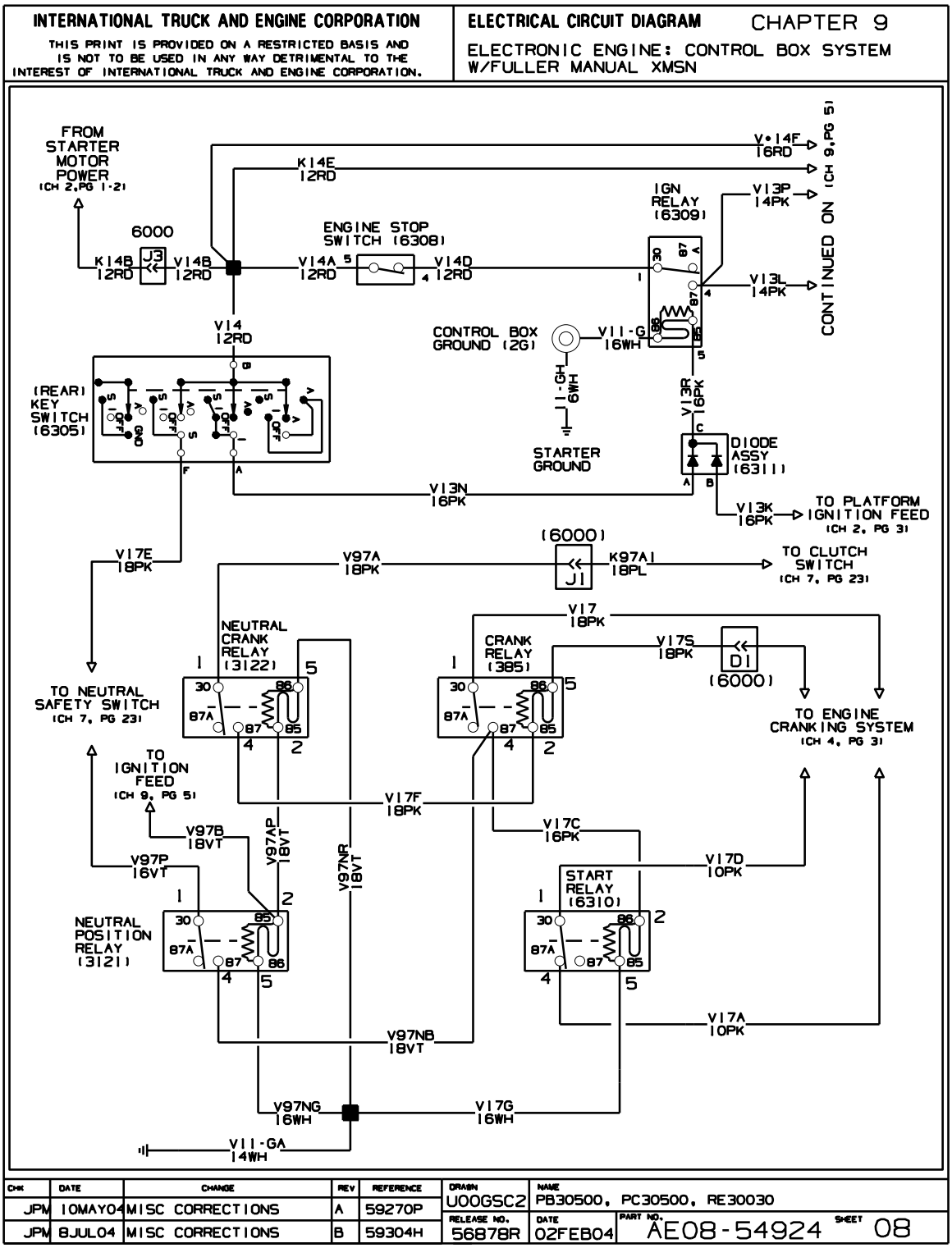

Figure 74 Control Box System with Fuller Manual Transmission

Electronic Engine Controls for Clean Power, p. 9

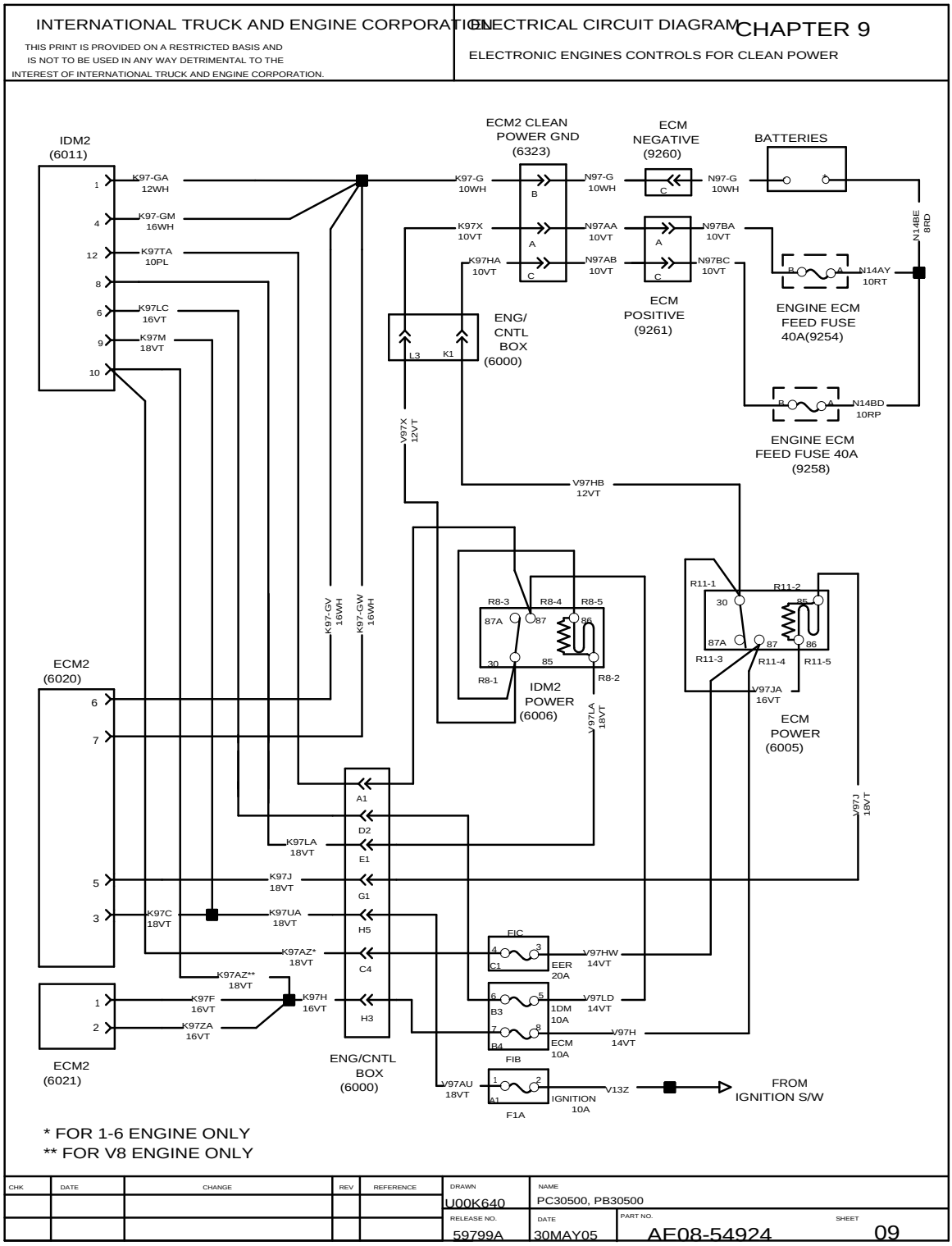

Figure 75 Electronic Engine Controls for Clean Power

Control Box System for Clean Power Allison Gen 4, p. 10

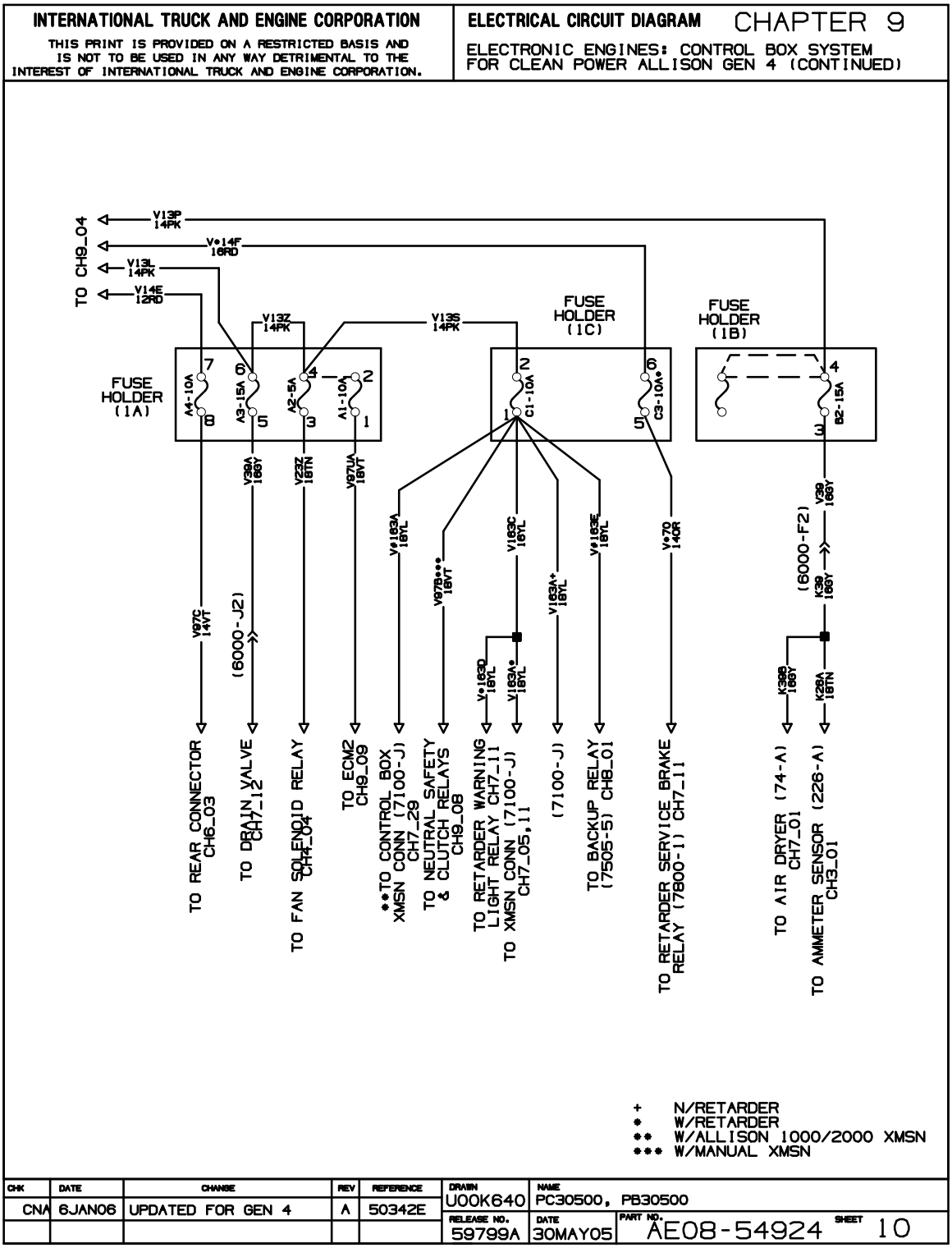

Figure 76 Control Box System for Clean Power Allison Gen 4

Increase Engine Idle Speed with AC On, p. 11

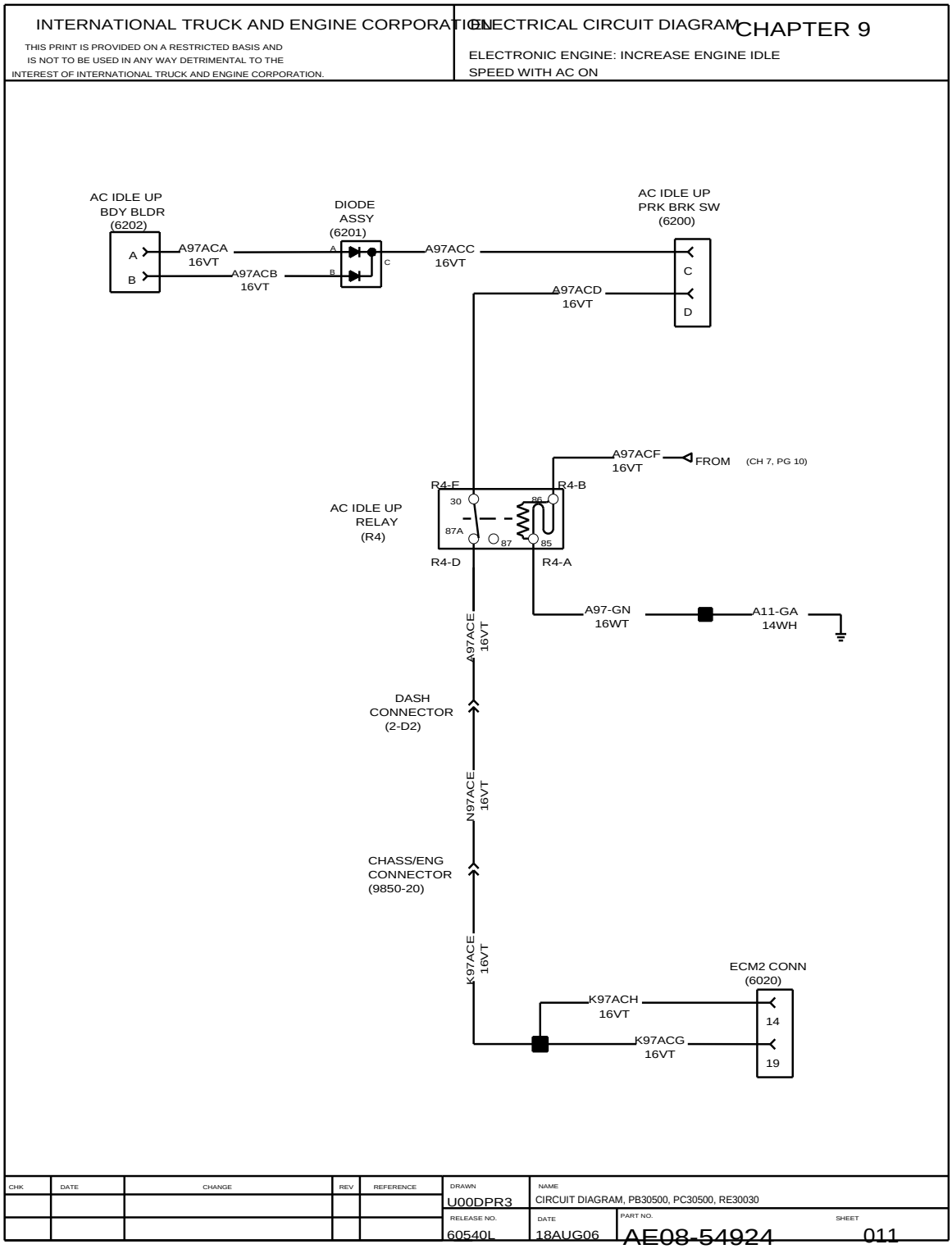

Figure 77 Control Box System for Clean Power Allison Gen 4

1.10. CONNECTOR COMPOSITES (CHAPTER 10)

Fuse Block Connections, p. 1

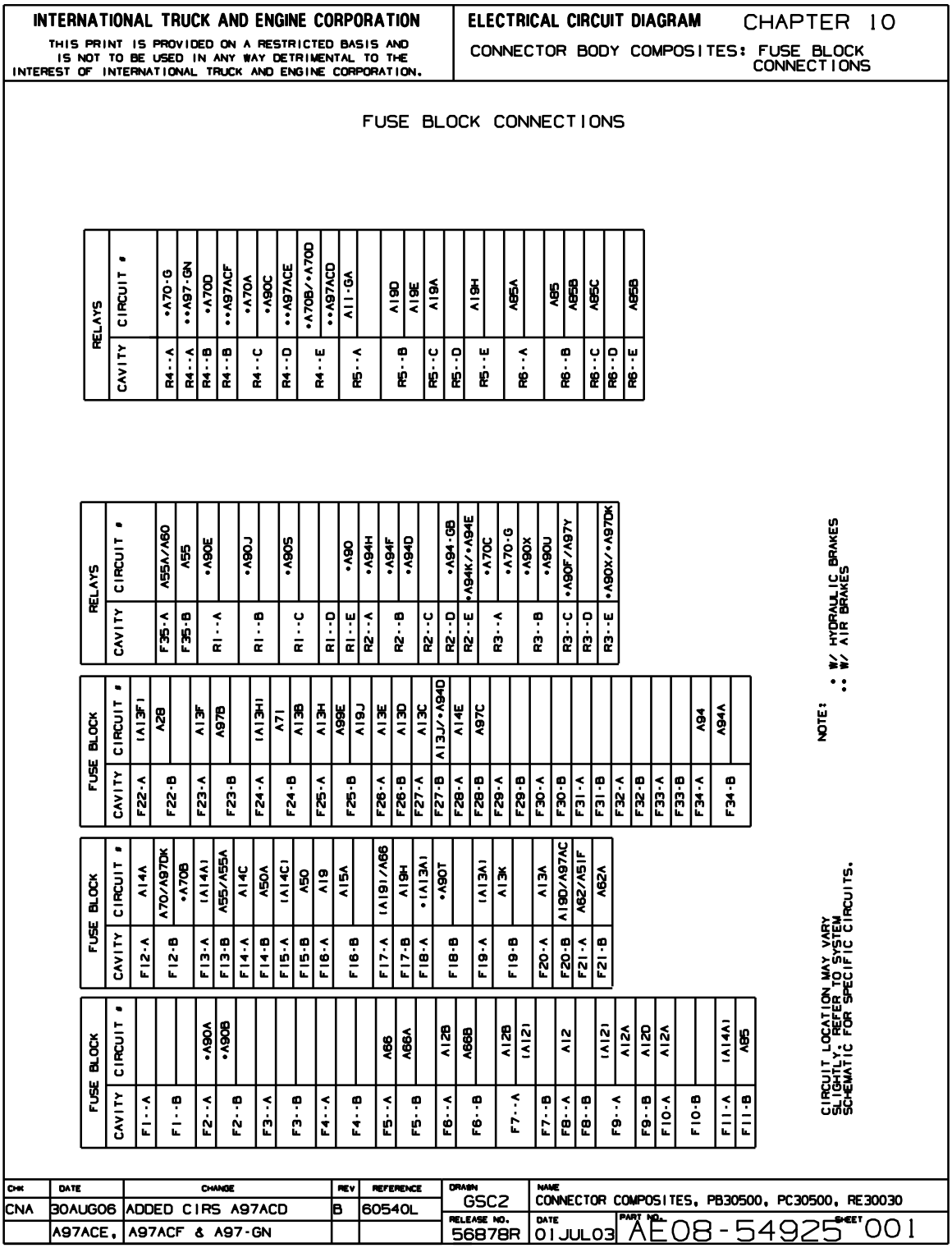

Figure 78 Fuse Block Connections

Fuse Block Connections (Cont.), p. 2

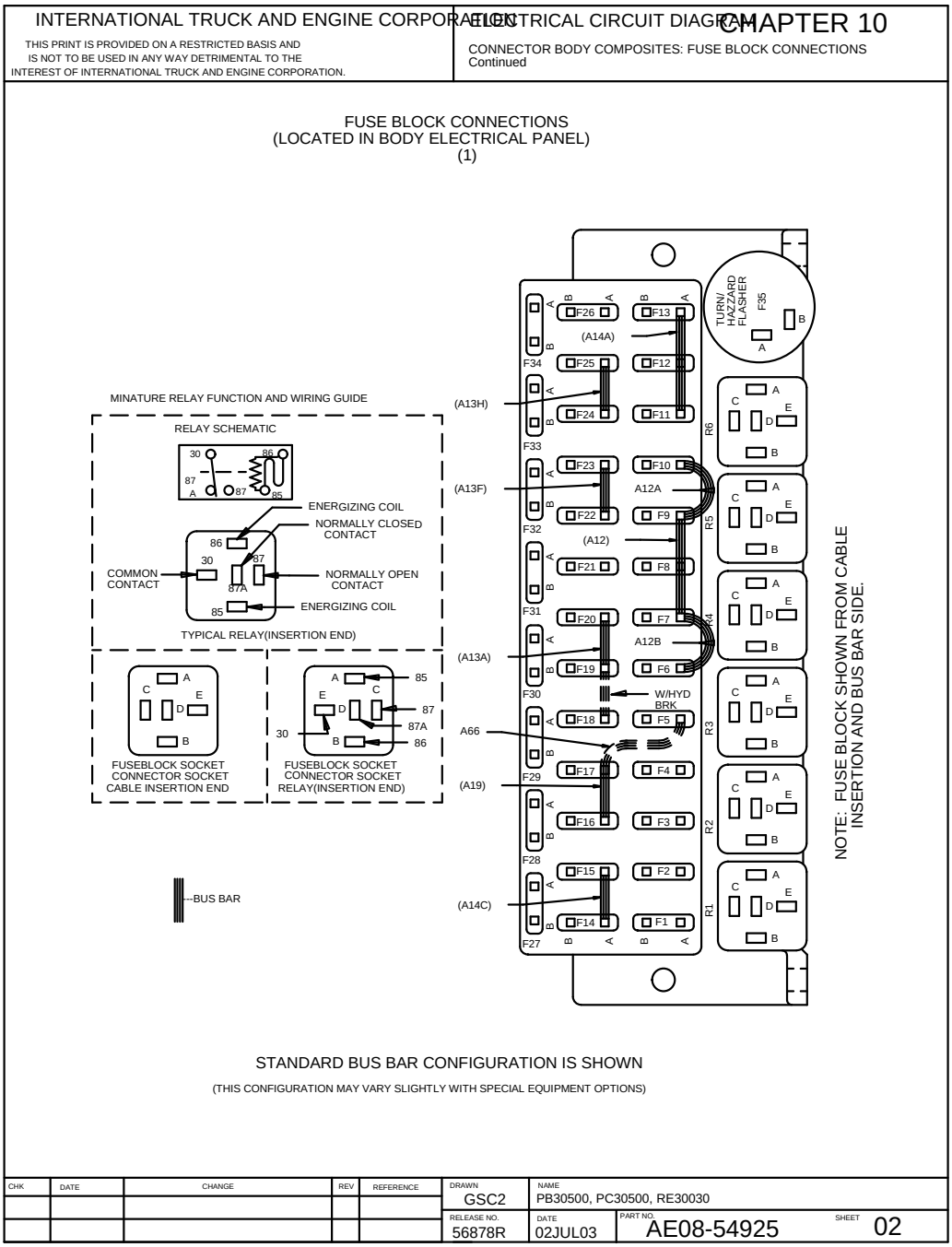

Figure 79 Fuse Block Connections (Cont.)

Fuse/Circuit Breaker Chart, p. 3

INTERNATIONAL TRUCK AND ENGINE CORPORATION

THIS PRINT IS PROVIDED ON A RESTRICTED BASIS AND IS NOT TO BE USED IN ANY WAY DETRIMENTAL TO THE INTEREST OF INTERNATIONAL TRUCK AND ENGINE CORPORATION.

ELECTRICAL CIRCUIT DIAGRAM CHAPTER 10

CONNECTOR BODY COMPOSITES: FUSE/CIRCUIT BREAKER CHART

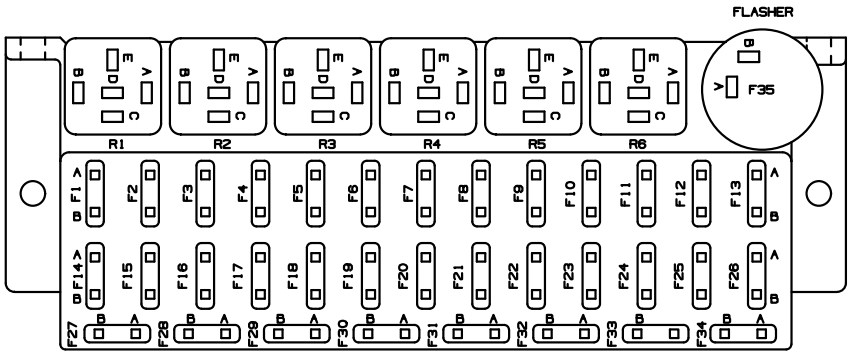

FUSEBLOCK PART NUMBER-1659650C1

LOCATION	SIZE	DESCRIPTION
F1	---	NOT USED
F2	*10 AMP	HYD BRAKE/CRUISE INTERFACE
F3	---	NOT USED
F4	---	NOT USED
F5	10 AMP	DAYTIME RUNNING LIGHTS BATT FEED
F6	10 AMP	DAYTIME RUNNING LIGHTS ACC FEED
F7	---	NOT USED
F8	---	NOT USED
F9	10 AMP	BODY BUILDER CONNECTIONS ACC FEED
F10	---	NOT USED
F11	20 AMP	HORN
F12	10 AMP	STOP LIGHTS
F13	20 AMP	TURN SIGNALS
F14	10 AMP	PANEL/MARKER LIGHTS
F15	20 AMP	HEADLIGHTS
F16	30 AMP	KEY SWITCH
F17	20 AMP	WATER IN FUEL
F18	10 AMP	HYD BRAKE PUMP/CLUTCH SWITCH
F19	15 AMP	IGN FEED REAR
F20	10 AMP	FUEL HEATER/MSM MODULE FEED
F21	5 AMP	PANEL LIGHTS
F22	5 AMP	INSTRUMENT CLUSTER
F23	10 AMP	CRUISE CONTROL
F24	10 AMP	BACKUP LIGHT SWITCH, WARNING ALARM
F25	10 AMP	ACCELERATOR POSITION SENSOR/FUEL FILTER
F26	10 AMP	BODY BUILDER CONNECTION IGN FEED
F27	10 AMP	AIR ABS IGN FEED
F28	10 AMP	DATA LINK BATT FEED
F29	---	NOT USED
F30	---	NOT USED
F31	---	NOT USED
F32	---	NOT USED
F33	---	NOT USED
F34	30 AMP	AIR ABS POWER RELAY BATT FEED
F35	N/A	FLASHER - HAZARD AND TURN

* W/HYD BRAKES

CHK	DATE	CHANGE	REV	REFERENCE	DRAWN	NAME
JPM	11FEB04	GSC2 MISC CORRECTIONS	A	56878R	GSC2	PB30500, PC30500, RE30030
					RELEASE NO. 56878R	DATE 01JUL03 / PART NO. AE08-54925 / SHEET 03

Figure 80 Fuse/Circuit Breaker Chart

Connector Composites (1A), (1B), (1C), p. 4

INTERNATIONAL TRUCK AND ENGINE CORPORATION

THIS PRINT IS PROVIDED ON A RESTRICTED BASIS AND IS NOT TO BE USED IN ANY WAY DETRIMENTAL TO THE INTEREST OF INTERNATIONAL TRUCK AND ENGINE CORPORATION.

ELECTRICAL CIRCUIT DIAGRAM CHAPTER 10

CONNECTOR BODY COMPOSITES: CONNECTOR BODY COMPOSITES (MATING END VIEW)

FUSE HOLDER (1A) (LOCATED IN CONTROL BOX)

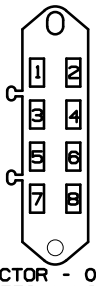

CONNECTOR - 0592951C1
* W/WTEC & LCT XMSN

CAV	CIRCUIT	GAUGE	COLOR	TERMINAL
1	V97UA	18	VT	1666118C1
2	(V13Z)	---	---	0557378C1
2	V13Y	14	PK	0557378C1
3	V23Z	18	TN	1666118C1
4	V13S*/V13Z	14	PK	0557378C1
5	V39A	16	GY	0557374C1
6	V13L	14	PK	0557375C1
7	V14E	12	RD	0557375C1
8	V97C	14	VT	0557374C1

FUSE HOLDER (1B) (LOCATED IN CONTROL BOX)

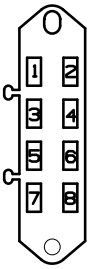

CONNECTOR - 0592951C1

CAV	CIRCUIT	GAUGE	COLOR	TERMINAL
1	---	---	---	---
2	---	---	---	---
3	V39	16	GY	0557374C1
4	V13P	14	PK	0557374C1
5	V97LD	14	VT	0557374C1
6	V97LC	16	VT	0557374C1
7	V97HY	16	VT	0557374C1
8	V97H	14	VT	0557374C1

FUSE HOLDER (1C) (LOCATED IN CONTROL BOX)

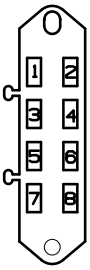

CONNECTOR - 0592951C1

CAV	CIRCUIT	GAUGE	COLOR	TERMINAL
1	V13T @@	16	PK	0557374C1
1	V146A/V146E **	18	YL	0557375C1
1	V146C/V146E *	16	OR	0557375C1
1	V146E *	16	OR	0557375C1
1	V163A/V163E &	18	YL	3515897C1
1	V163E/V163C	18	YL	0557375C1
2	V13S	14	PK	0557374C1
3	V97HW	14	VT	0557374C1
4	V97HX	14	VT	0557374C1
5	V14F	16	RD	0557374C1
6	V70	14	OR	0557374C1
7	V13Y	14	PK	0557374C1
8	V97P	16	VT	0557374C1

* W/WTEC XMSN W/RETARDER
** W/WTEC XMSN
@ W/WTEC GEN IV W/RETARDER
@@ W/LCT XMSN
& ALLISON GEN IV

CHK	DATE	CHANGE	REV	REFERENCE	DRAWN	NAME
CNA	6JAN06	ADDED CLEAN POWER	A	50342E	GSC2	PB30500, PC30500, RE30030
		AND GEN4 EFFECTS			RELEASE NO. 56878R	DATE 01JUL03 / PART NO. AE08-54925 / SHEET 04

Figure 81 Connector Composites (1A), (1B), (1C)

Connector Composite (2A), p. 5

INTERNATIONAL TRUCK AND ENGINE CORPORATION

THIS PRINT IS PROVIDED ON A RESTRICTED BASIS AND IS NOT TO BE USED IN ANY WAY DETRIMENTAL TO THE INTEREST OF INTERNATIONAL TRUCK AND ENGINE CORPORATION.

ELECTRICAL CIRCUIT DIAGRAM CHAPTER 10

CONNECTOR BODY COMPOSITES: CONNECTOR BODY COMPOSITES (MATING END VIEW) Continued

DASH CONNECTOR (2A)

(LOCATED ON RIGHT SIDE OF PLATFORM)

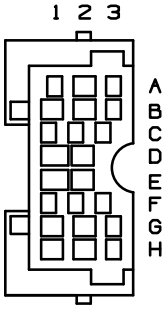

CONNECTOR - 1661195C1
CONNECTOR BODY LOCK - 1661206C1

CAV	CIRCUIT	GAUGE	COLOR	TERMINAL
A1	N13K	18	PK	1661212C1
A2	N94W	18	GY	1661220C1
A3	N97AF	18	VT	1661212C1
B1	N90B *	12	GY	3541022C1
B1	N94K **	10	GY	1661627C1
B1	N94K ⊛	12	GY	3541022C1
B2	N90C *	12	GY	3541022C1
B2	N94KG **	16	GY	1661222C1
B3	N3BA+	18	DK BL	1661212C1
C1	N3BA-	18	GY	1661212C1
C2	N99D	18	PL	1661212C1
C3	---	---	---	---
D1	N90J	18	GY	1661229C1
D2	N90L	18	GY	1661220C1
D3	---	---	---	---
E1	N44	18	GY	1661229C1
E1	N97A	14	VT	1661231C1
E2	N44-GA *	18	WH	1661220C1
E2	N97L **	14	VT	1661222C1
E3	---	---	---	---
F1	N97DH	18	VT	1661212C1
F2	N97DE	18	VT	1661212C1
F3	N99C5V	18	PL	1661212C1
G1	---	---	---	---
G2	N99B	18	PL	1661220C1
G3	N97CF	18	PL	1661212C1
H1	N99A	18	PL	1661220C1
H2	---	---	---	---
H3	N97T	18	VT	1661212C1

* W/HYD BRAKES
** W/AIR BRAKES
⊛ W/ABS6 AIR BRAKES

CHK	DATE	CHANGE	REV	REFERENCE	DRAWN	NAME
CNA	6JAN06	ADDED GEN4 EFFECTS	A	50342E	GSC2	PB30500, PC30500, RE30030
					RELEASE NO. 56878R	DATE 01JUL03 / PART NO. AE08-54925 / SHEET 05

Figure 82 Connector Composite (2A)

Connector Composite (2F), p. 5A

INTERNATIONAL TRUCK AND ENGINE CORPORATION

THIS PRINT IS PROVIDED ON A RESTRICTED BASIS AND IS NOT TO BE USED IN ANY WAY DETRIMENTAL TO THE INTEREST OF INTERNATIONAL TRUCK AND ENGINE CORPORATION.

ELECTRICAL CIRCUIT DIAGRAM CHAPTER 10

CONNECTOR BODY COMPOSITES: CONNECTOR BODY COMPOSITES (MATING END VIEW) Continued

DASH CONNECTOR
(2F)

(LOCATED ON RIGHT
SIDE OF PLATFORM)

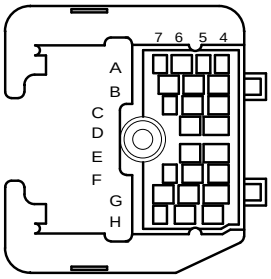

CONNECTOR - 1661194C91
CONNECTOR
BODY LOCK - 1661207C1

* W/HYD BRAKES
** W/AIR BRAKES

CAV	CIRCUIT	GAUGE	COLOR	TERMINAL
A4	N40	18	GY	1661212C1
A5	N90F *	16	GY	1661212C1
A5	N94CT **	16	GY	1661212C1
A6	N90D	12	GY	3541022C1
A7	N90E *	16	GY	1661212C1
A7	N94FT **	16	GY	1661212C1
B4	N97Y	18	VT	1661220C1
B5	N90H	18	GY	1661220C1
B6	N97AE	18	PL	1661220C1
B7	---	---	---	---
C4	N85C	16	GY	1661222C1
C5	N71	18	OR	1661220C1
C6	N36	18	TN	1661212C1
C7	---	---	---	---
D4	N97N	18	PL	1661229C1
D5	N24	18	GY	1661220C1
D6	---	---	---	---
D7	---	---	---	---
E4	---	---	---	---
E5	N94H *	18	GY	1661220C1
E5	N94H **	16	GY	1661222C1
E6	---	---	---	---
E7	---	---	---	---
F4	N31A	18	TN	1661220C1
F5	N26	16	TN	1661222C1
F6	N94U	18	GY	1661212C1
F7	---	---	---	---
G4	N90P	18	GY	1661229C1
G5	N71A	16	OR	1661222C1
G6	N17	18	PK	1661220C1
G7	---	---	---	---
H4	---	---	---	---
H5	N19A	16	GY	1661220C1
H6	N19C	18	GY	1661212C1
H7	---	---	---	---

CHK	DATE	CHANGE	REV	REFERENCE	DRAWN	NAME		
					U00K640	PB30500, PC30500, RE30030		
					RELEASE NO. 50342E	DATE 12DEC05	PART NO. AE08-54925	SHEET 05A

Figure 83 Connector Composite (2F)

Connector Composites (4), (6), (7), (8), (9), (11), (12), p. 6

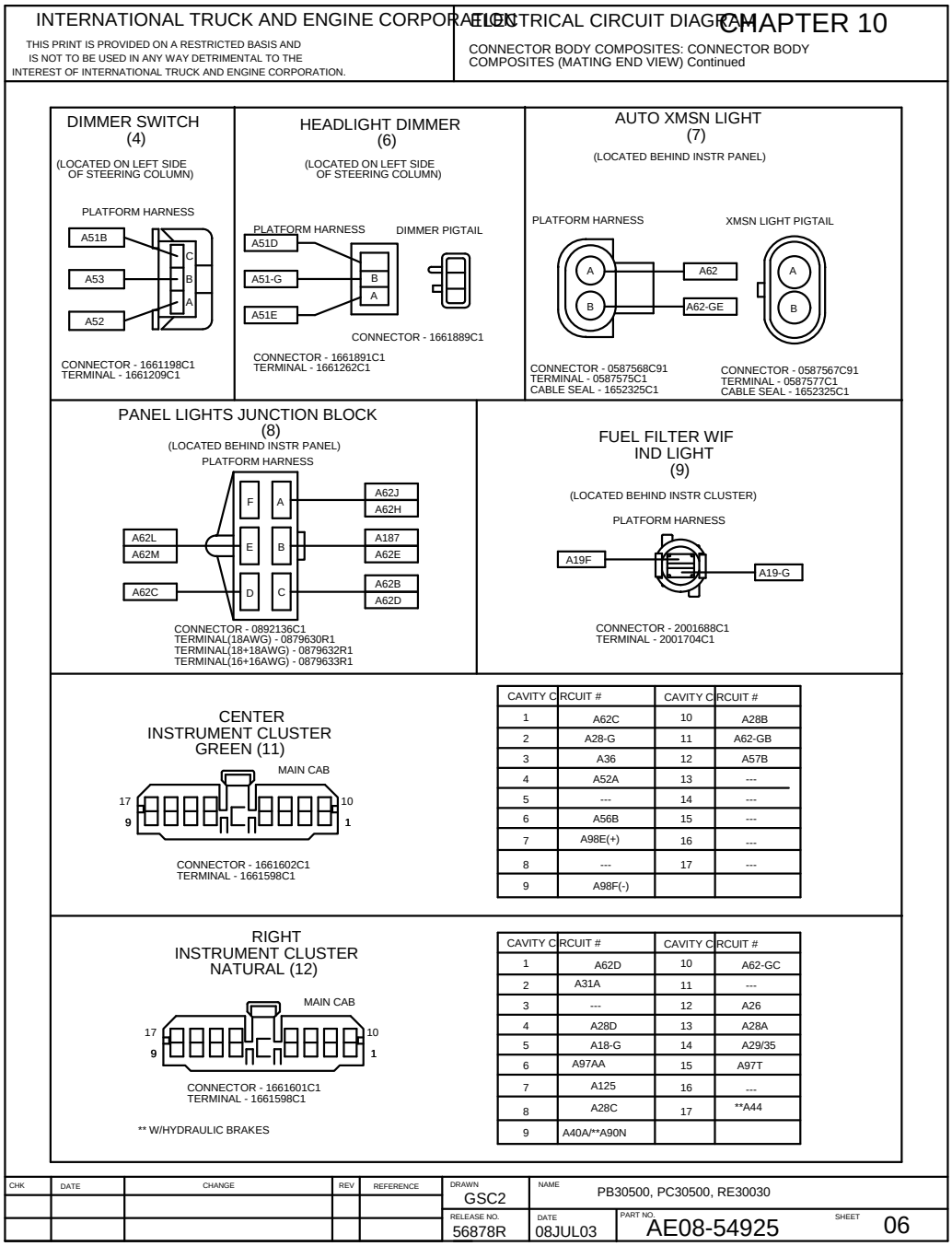

CAVITY	CIRCUIT #	CAVITY	CIRCUIT #
1	A62C	10	A28B
2	A28-G	11	A62-GB
3	A36	12	A57B
4	A52A	13	---
5	---	14	---
6	A56B	15	---
7	A98E(+)	16	---
8	---	17	---
9	A98F(-)		

CAVITY	CIRCUIT #	CAVITY	CIRCUIT #
1	A62D	10	A62-GC
2	A31A	11	---
3	---	12	A26
4	A28D	13	A28A
5	A18-G	14	A29/35
6	A97AA	15	A97T
7	A125	16	---
8	A28C	17	**A44
9	A40A/**A90N		

Figure 84 Connector Composites (4), (6), (7), (8), (9), (11), (12)

Connector Composites (13), (20), (22), (23), (25), p. 7

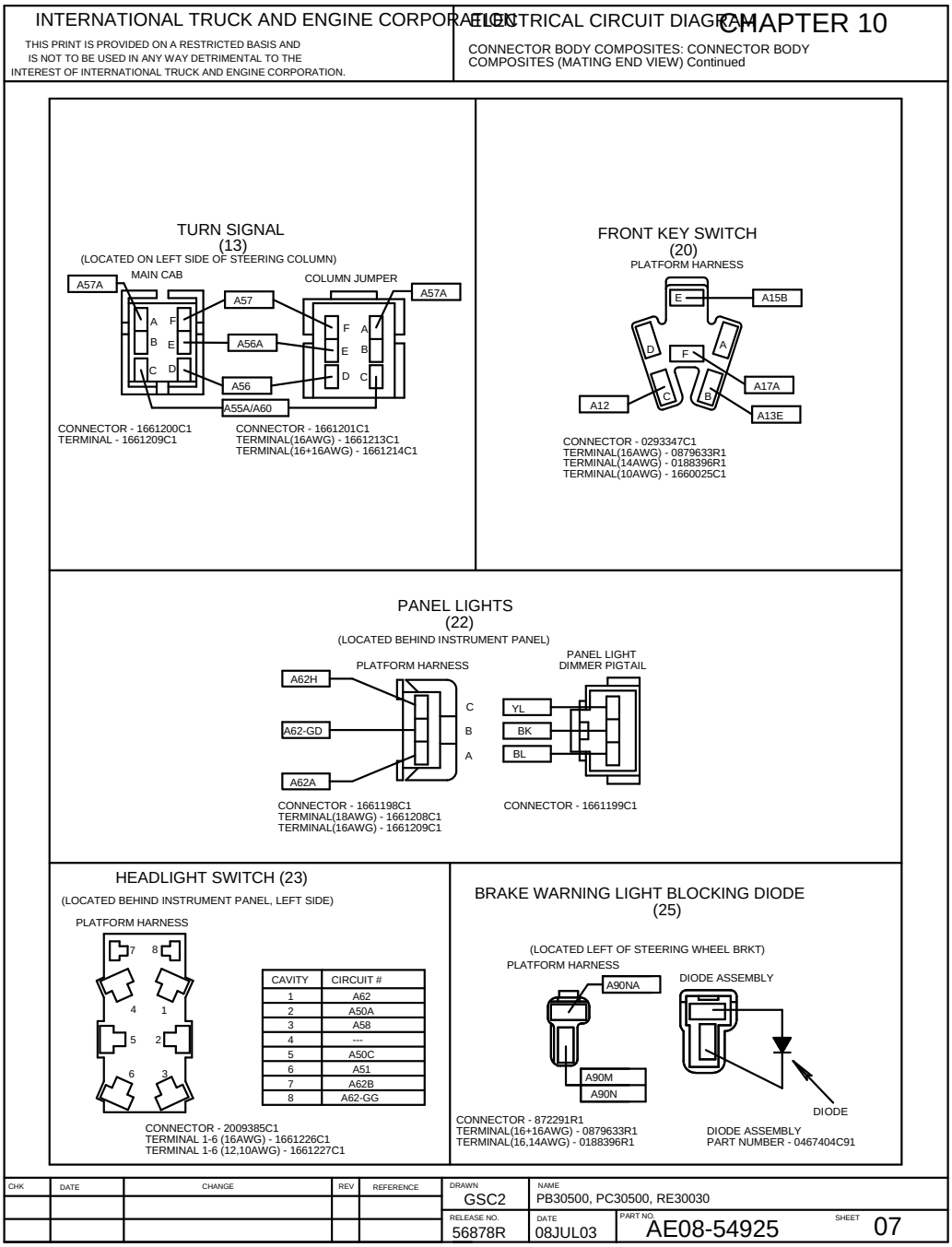

CAVITY	CIRCUIT #
1	A62
2	A50A
3	A58
4	---
5	A50C
6	A51
7	A62B
8	A62-GG

Figure 85 Connector Composites (13), (20), (22), (23), (25)

Connector Composites (37), (37F), (42), (43), (43M), p. 8

INTERNATIONAL TRUCK AND ENGINE CORPORATION

THIS PRINT IS PROVIDED ON A RESTRICTED BASIS AND IS NOT TO BE USED IN ANY WAY DETRIMENTAL TO THE INTEREST OF INTERNATIONAL TRUCK AND ENGINE CORPORATION.

ELECTRICAL CIRCUIT DIAGRAM CHAPTER 10

CONNECTOR BODY COMPOSITES: CONNECTOR BODY COMPOSITES (MATING END VIEW) Continued

ABS6 ECU
(37)
FUEL SENDER
CABLE ASSY
(LOCATED ON
LEFT FRAME RAIL)

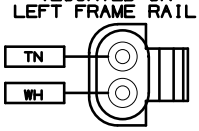

FUEL SENDER
(37F)

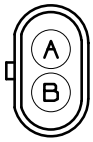

CAV	CIRCUIT	GAUGE	COLOR	TERMINAL	SEAL/SLEEVE
A	N36	18	TN	0587578C1	1652325C1
B	N36-G	18	WH	0587578C1	1652325C1

CONNECTOR - 0587568C91 CONNECTOR - 0587567C91
TERMINAL - 0587575C1
CABLE SEAL- 1652325C1

DRAIN VALVE
(42)
(LOCATED ON BOTTOM
OF AIR TANK)

DRAIN VALVE
CABLE ASSY.

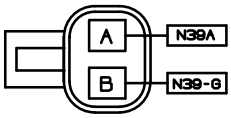

CONNECTOR - 1671610C1
TERMINAL(14AWG) - 2033816C1

VALVE
PIGTAIL

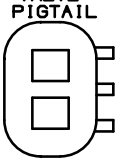

CONNECTOR - 1671611C1
TERMINAL(14AWG) - 2033912C1

DRAIN VALVE
(43)
DRAIN VALVE
CABLE ASSY
(LOCATED ON AIR TANK)

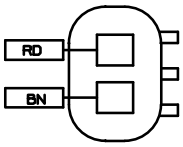

CONNECTOR - 1671611C1

DRAIN VALVE
(43M)

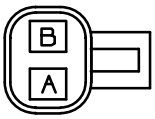

CAV	CIRCUIT	GAUGE	COLOR	TERMINAL	SEAL/SLEEVE
A	N39A	14	GY	2033816C1	0589391C1
B	N39-G	14	WH	2033816C1	0589391C1

CONNECTOR - 1671610C1
CONNECTOR
BODY LOCK - 1671608C1

CHK	DATE	CHANGE	REV	REFERENCE	DRAWN	NAME		
CNA	6JAN06	ADDED GEN4 EFFECTS	A	50342E	GSC2	PB30500, PC30500, RE30030		
					RELEASE NO. 56878R	DATE 08JUL03	PART NO. AE08-54925	SHEET 08

Figure 86 Connector Composites (37), (37F), (42), (43), (43M)

Connector Composites (64), (69), (74F), p. 8A

INTERNATIONAL TRUCK AND ENGINE CORPORATION

THIS PRINT IS PROVIDED ON A RESTRICTED BASIS AND IS NOT TO BE USED IN ANY WAY DETRIMENTAL TO THE INTEREST OF INTERNATIONAL TRUCK AND ENGINE CORPORATION.

ELECTRICAL CIRCUIT DIAGRAM CHAPTER 10

CONNECTOR BODY COMPOSITES: CONNECTOR BODY COMPOSITES (MATING END VIEW) Continued

RECTIFIER ASSY
(64)
(LOCATED ABOVE ACCELERATOR PEDAL)

WARNING LIGHT HARNESS

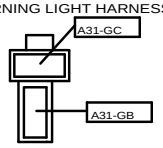

CONNECTOR - 0872291R1
TERMINAL(18AWG) - 0879630R1

RECTIFIER DIODE ASSY

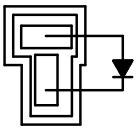

DIODE ASSY - 0467404C91

FUEL FILTER WARN LIGHT
(LOCATED IN CLUSTER
(69)

(LOCATED IN CLUSTER)

PLATFORM HARNESS

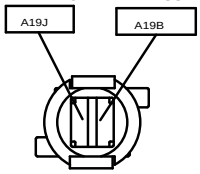

CONNECTOR - 2001688C1
TERMINAL - 2001704C1

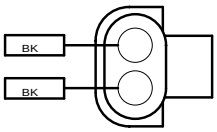

CONNECTOR - 0587568C91
TERMINAL(14AWG) - 0587575C1

AIR DRYER
CONNECTOR
(74F)

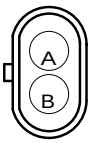

CONNECTOR - 0587567C91

CAV	CIRCUIT	GAUGE	COLOR	TERMINAL	SEAL/SLEEVE
A	K39B	16	GY	0587577C1	1652325C1
B	K39-GA	16	WH	0587577C1	1652325C1

CHK	DATE	CHANGE	REV	REFERENCE	DRAWN	NAME		
					U00K640	PB30500, PC30500, RE30030		
					RELEASE NO. 50342E	DATE 12DEC05	PART NO. AE08-54925	SHEET 08A

Figure 87 Connector Composites (64), (69), (74F)

Connector Composites (75), (78), (79), (80), (82), (86), p. 9

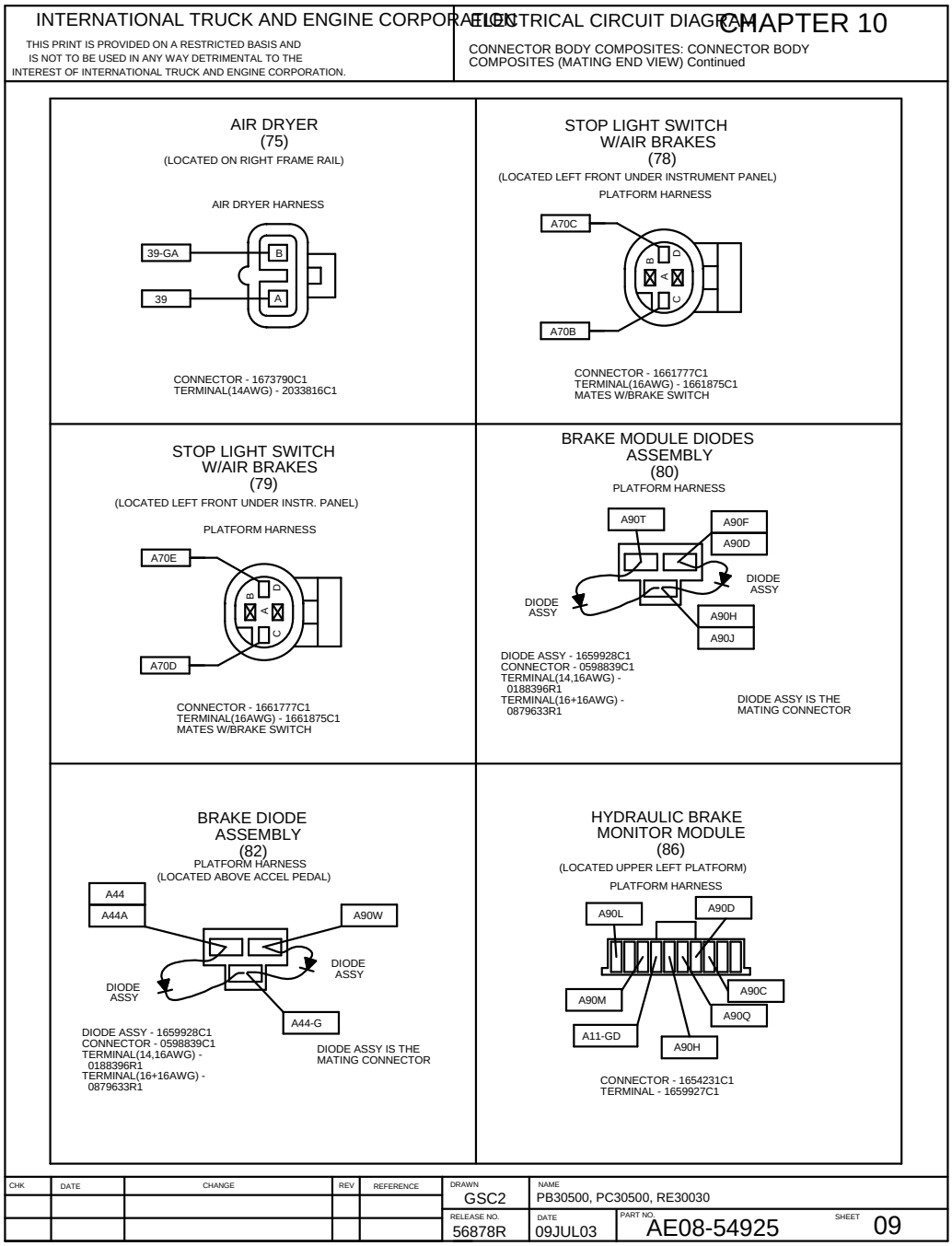

Figure 88 Connector Composites (75), (78), (79), (80), (82), (86)

Connector Composites (88), (89), (90), (91), (94), (100), p. 10

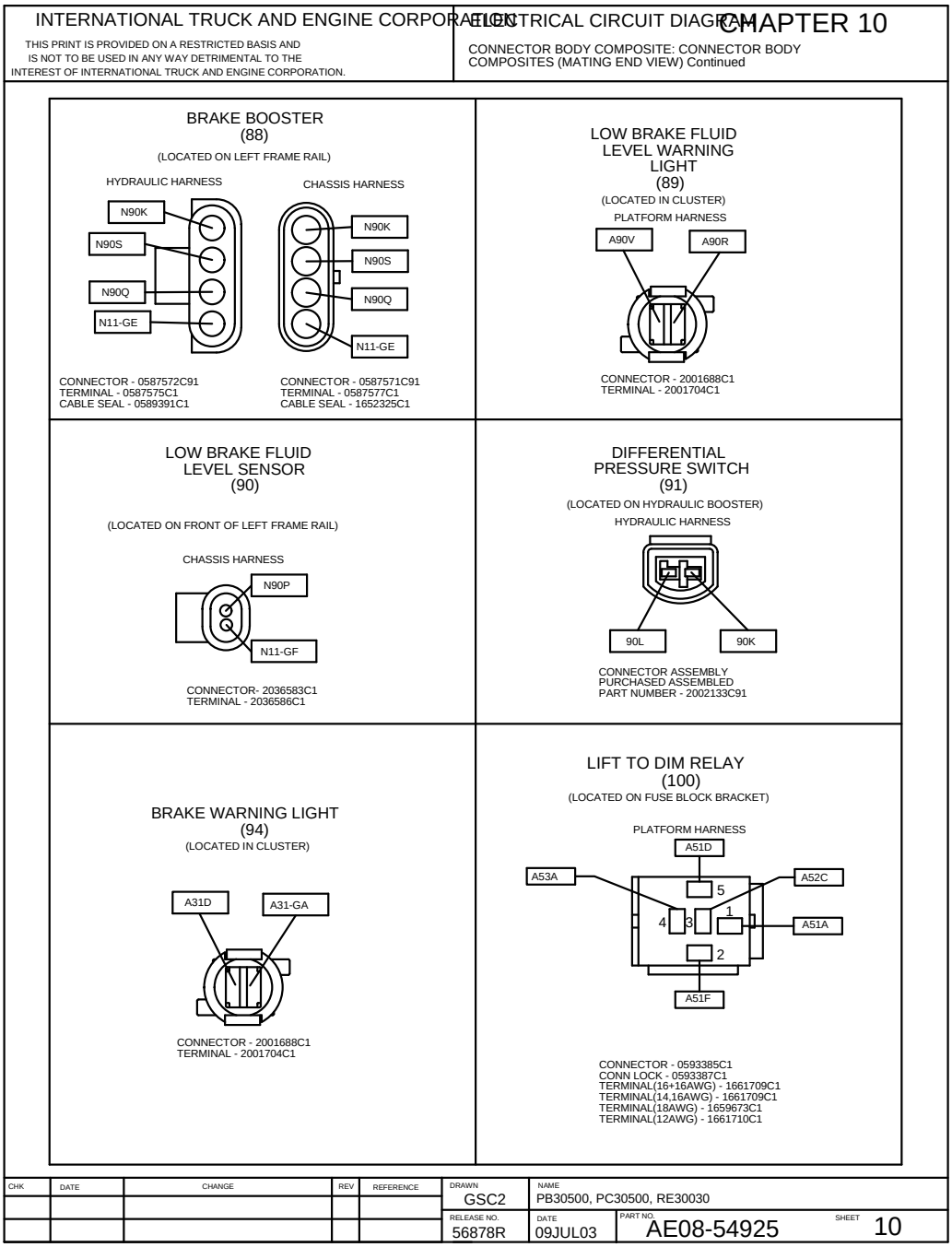

Figure 89 Connector Composites (88), (89), (90), (91), (94), (100)

Connector Composites (101), (165), (169), (170), p. 11

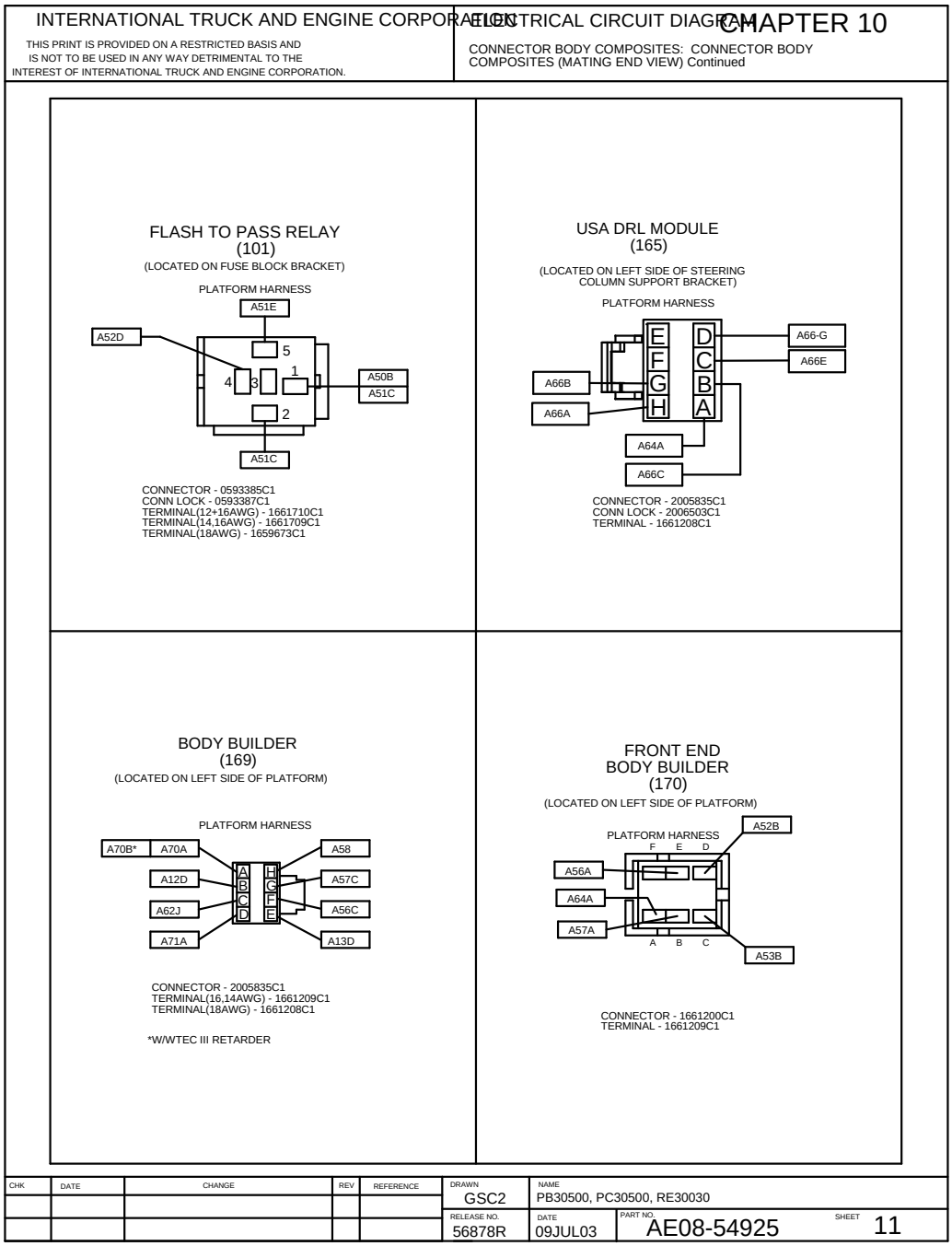

Figure 90 Connector Composites (101), (165), (169), (170)

Connector Composites (209), (211), p. 12

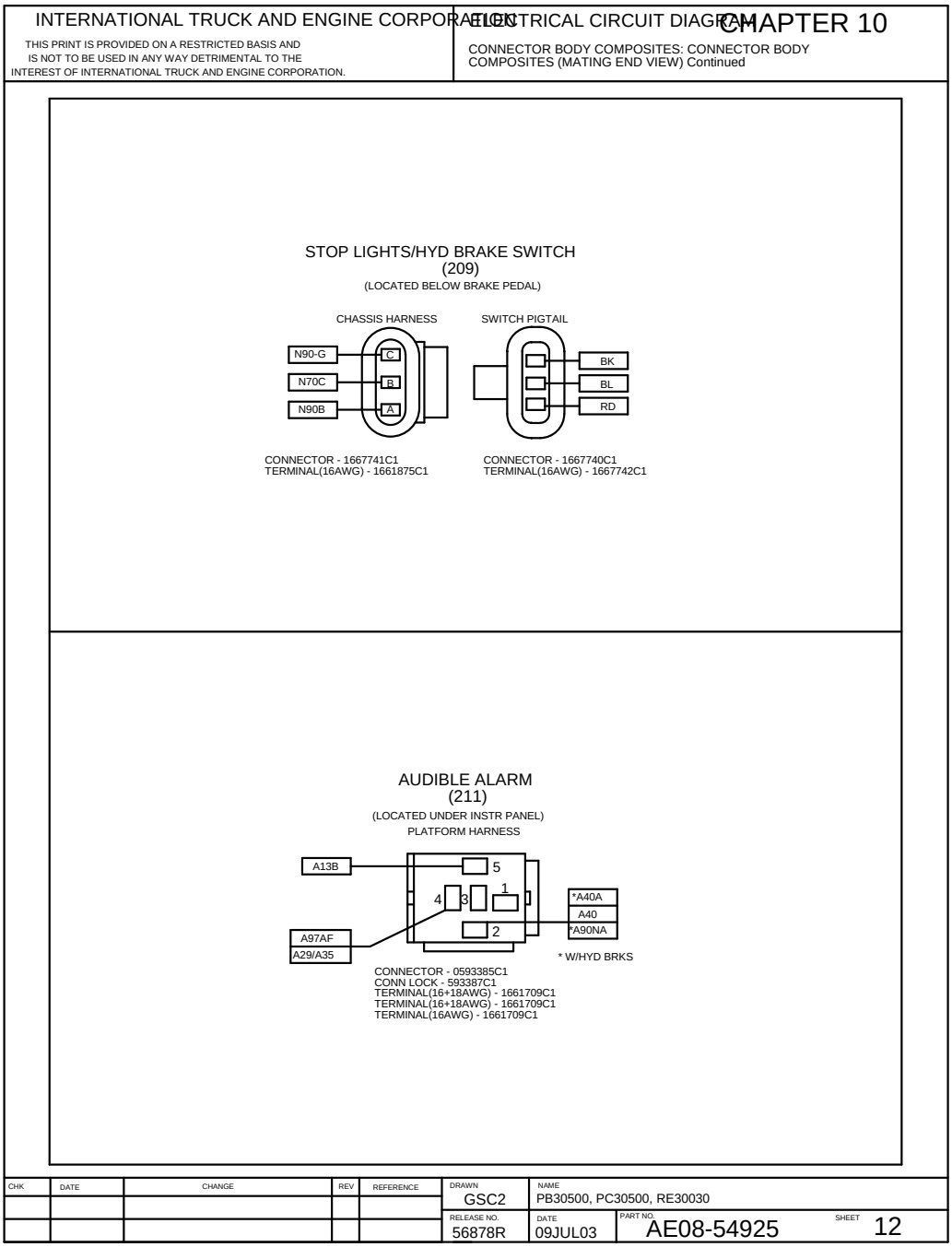

Figure 91 Connector Composites (209), (211)

Connector Composites (218), (258), (279), (283), (284), (288), p. 13

INTERNATIONAL TRUCK AND ENGINE CORPORATION

THIS PRINT IS PROVIDED ON A RESTRICTED BASIS AND IS NOT TO BE USED IN ANY WAY DETRIMENTAL TO THE INTEREST OF INTERNATIONAL TRUCK AND ENGINE CORPORATION.

ELECTRICAL CIRCUIT DIAGRAM CHAPTER 10

CONNECTOR BODY COMPOSITE: CONNECTOR BODY COMPOSITES (MATING END VIEW) Continued

PARK BRAKE SWITCH (218)

(LOCATED ON LEFT SIDE OF PLATFORM)
PLATFORM HARNESS

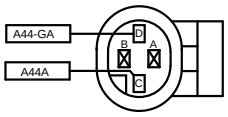

CONNECTOR - 1661777C1
TERMINAL(16AWG) - 1661875C1
MATES W/PRESSURE SWITCH

W/HYD BRAKES

HYD ABS MODULE BATTERY AND GROUND CONN (258)

CHASSIS HARNESS

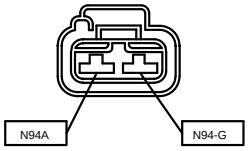

CONNECTOR - 3524332C1
TERMINAL - 3524333C1
SEAL - 3524334C1

HYDRAULIC ANTILOCK BRAKE MODULE CONN (279)

CHASSIS HARNESS

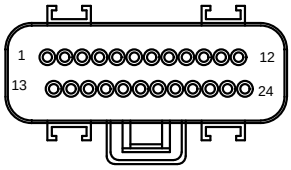

CONNECTOR - 3524330C1
TERMINAL - 3524331C1

CAVITY	CIRCUIT	CAVITY	CIRCUIT
1	N94K	13	---
2	N94J	14	N94F
3	---	15	N94C
4	---	16	---
5	N98P(+)	17	---
6	---	18	---
7	N94H	19	---
8	N94RR(H)	20	N94RR(L)
9	N94LR(H)	21	N94LR(L)
10	N94RF(H)	22	N94RF(L)
11	N94LF(H)	23	N94LF(L)
12	---	24	---

AIR ABS POWER RELAY (283)

ABS PLATFORM OVERLAY

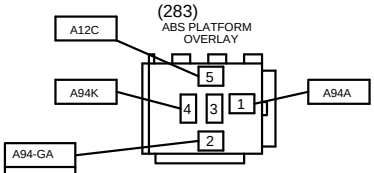

CONNECTOR - 593385C1
CONNECTOR LOCK - 593387C1
TERMINAL(14,16AWG)- 1661709C1
TERMINAL(10 AWG)-1661710C1

* W/ALLISON WTEC & LCT XMSNS

AIR ABS WARNING LIGHT RELAY (284)

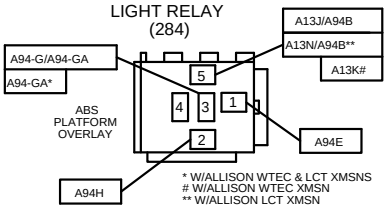

* W/ALLISON WTEC & LCT XMSNS
# W/ALLISON WTEC XMSN
** W/ALLISON LCT XMSN

CONNECTOR - 593385C1
CONNECTOR LOCK - 593387C1
TERMINAL(16AWG)- 1661709C1
TERMINAL(16+16AWG)-1661710C1

AIR ABS ECU (288)

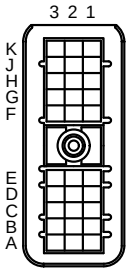

CONNECTOR - 1687787C1
TERMINAL - 1651943C1
PLUG - 1687788C1

CAVITY	CIRCUIT	CAVITY	CIRCUIT	CAVITY	CIRCUIT
A1	N94-GB	E1	VT/WTS	J1	GY/WTS
A2	N94-GC	E2	PLUG	J2	OR/WTS
A3	N94-GD	E3	N94H	J3	PLUG
B1	N94KA	F1	BK/WTS	K1	PLUG
B2	PLUG	F2	PLUG	K2	N94KB
B3	PLUG	F3	PLUG	K3	N94KC
C1	LTGN/WTS	G1	BN/WTS		
C2	PLUG	G2	N3BB+		
C3	N5DB+	G3	N3BB-		
D1	LTBL/WTS	H1	RD/WTS		
D2	PLUG	H2	DKBL/WTS		
D3	N5DB-	H3	YL/WTS		

CHK	DATE	CHANGE	REV	REFERENCE	DRAWN	NAME	
					GSC2	PB30500, PC30500, RE30030	
					RELEASE NO. 56878R	DATE 14JUL03	PART NO. AE08-54925 SHEET 13

Figure 92 Connector Composites (218), (258), (279), (283), (284), (288)

Connector Composites (288), (288X1), p. 13A

INTERNATIONAL TRUCK AND ENGINE CORPORATION

THIS PRINT IS PROVIDED ON A RESTRICTED BASIS AND IS NOT TO BE USED IN ANY WAY DETRIMENTAL TO THE INTEREST OF INTERNATIONAL TRUCK AND ENGINE CORPORATION.

ELECTRICAL CIRCUIT DIAGRAM CHAPTER 10

CONNECTOR BODY COMPOSITE: CONNECTOR BODY COMPOSITES (MATING END VIEW) Continued

ABS ECU
(288)

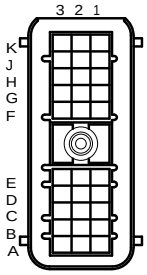

CONNECTOR - 3554087C1

@ W/AIR BRAKES & W/ TRACTION CONTROL

CAV	CIRCUIT	GAUGE	COLOR	TERMINAL
A1	N94-GB	16	WH	3554090C1
A2	N94-GC	16	WH	3554090C1
A3	N94-GD	16	WH	3554090C1
B1	N94KA	16	GY	3554090C1
B2	PLUG	---	---	3554386C1
B3	PLUG	---	---	3554386C1
C1	LTGN/WTS	16	LT GN	3554090C1
C2	N94CT @	16	GY	3554090C1
C3	N5DB+	18	YL	3565443C1
D1	LTBL/WTS	16	LT BL	3554090C1
D2	PLUG	---	---	3554386C1
D3	N5DB-	18	GN	3565443C1
E1	VT/WTS	16	VT	3554090C1
E2	PLUG	---	---	3554386C1
E3	N94H	16	GY	3554090C1
F1	BK/WTS	16	BK	3554090C1
F2	N94FT @	16	GY	3554090C1
F3	PLUG	---	---	3554386C1
G1	BN/WTS	16	BN	3554090C1
G2	N3BB+	18	DK BL	3565443C1
G3	N3BB-	18	GY	3565443C1
H1	RD/WTS	16	RD	3554090C1
H2	DKBL/WTS	16	DK BL	3554090C1
H3	YL/WTS	16	YL	3554090C1
J1	GY/WTS	16	GY	3554090C1
J2	OR/WTS	16	OR	3554090C1
J3	PLUG	---	---	3554386C1
K1	PLUG	---	---	3554386C1
K2	N94KB	16	GY	3554090C1
K3	N94KC	16	GY	3554090C1

ABS6 ECU
(288X1)

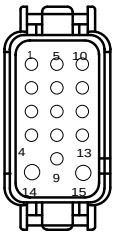

CONNECTOR - 3598469C1

CAV	CIRCUIT	GAUGE	COLOR	TERMINAL
1	N3BB-	18	GY	1680205C1
2	N5DB-	18	GN	1680205C1
3	OR/WTS	16	OR	1680205C1
4	YL/WTS	16	YL	1680205C1
5	N3BB+	18	DK BL	1680205C1
6	N5DB+	18	YL	1680205C1
7	GY/WTS	16	GY	1680205C1
8	DKBL/WTS	16	DK BL	1680205C1
9	N94KG	16	GY	1680205C1
10	PLUG	---	---	0453133C1
11	PLUG	---	---	0453133C1
12	N94H	16	GY	1680205C1
13	PLUG	---	---	0453133C1
14	N94K	12	GY	3557534C1
15	N11-G	12	WH	3557534C1

W/ABS6 AIR BRAKES

CHK	DATE	CHANGE	REV	REFERENCE	DRAWN	NAME		
					U00K640	PB30500, PC30500, RE30030		
					RELEASE NO. 50342E	DATE 12DEC05	PART NO. AE08-54925	SHEET 13A

Figure 93 Connector Composites (288), (288X1)

Connector Composites (289), (290), (291), (292), p. 14

INTERNATIONAL TRUCK AND ENGINE CORPORATION

THIS PRINT IS PROVIDED ON A RESTRICTED BASIS AND IS NOT TO BE USED IN ANY WAY DETRIMENTAL TO THE INTEREST OF INTERNATIONAL TRUCK AND ENGINE CORPORATION.

ELECTRICAL CIRCUIT DIAGRAM CHAPTER 10

CONNECTOR BODY COMPOSITES: CONNECTOR BODY COMPOSITES (MATING END VIEW) Continued

LEFT FRONT WHEEL SENSOR (289)

CONNECTOR - 1684261C1
CONNECTOR BODY LOCK - 1684263C1

CAV	CIRCUIT	GAUGE	COLOR	TERMINAL
1	GY/WTS	16	GY	3572625C1
2	OR/WTS	16	OR	3572625C1

HYD ABS LEFT FRONT WHEEL SPEED SENSOR (289)

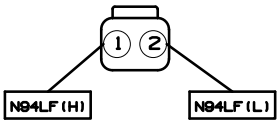

CONNECTOR - 3539777C1
CONN LOCK - 3539784C1
TERMINAL - 1651969C1

LEFT FRONT MODULER VALVE (290)

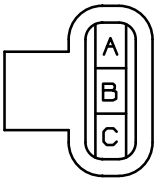

CAV	CIRCUIT	GAUGE	COLOR	TERMINAL	SEAL/SLEEVE
A	BK/WTS	16	BK	2033819C1	1652325C1
B	RD/WTS	16	RD	2033819C1	1652325C1
C	BN/WTS	16	BN	2033819C1	1652325C1

CONNECTOR - 1686834C1
CONNECTOR BODY LOCK - 1664408C1

RIGHT FRONT MODULER VALVE (291)

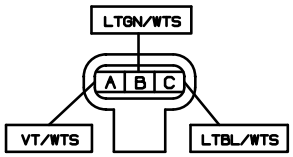

CAV	CIRCUIT	GAUGE	COLOR	TERMINAL	SEAL/SLEEVE
A	VT/WTS	16	VT	2033819C1	1652325C1
B	LTGN/WTS	16	LT GN	2033819C1	1652325C1
C	LTBL/WTS	16	LT BL	2033819C1	1652325C1

CONNECTOR - 1686834C1
CONNECTOR BODY LOCK - 1664408C1

RIGHT FRONT WHEEL SENSOR (292)

CAV	CIRCUIT	GAUGE	COLOR	TERMINAL
1	DKBL/WTS	16	DK BL	3572625C1
2	YL/WTS	16	YL	3572625C1

CONNECTOR - 1684261C1
CONNECTOR BODY LOCK - 1684263C1

CHK	DATE	CHANGE	REV	REFERENCE	DRAWN	NAME
CNA	6JAN06	ADDED GEN4 EFFECTS	A	50342E	GSC2	PB30500, PC30500, RE30030
					RELEASE NO. 56878R	DATE 14JUL03 / PART NO. AE08-54925 / SHEET 14

Figure 94 Connector Composites (289), (290), (291), (292)

Connector Composites (292), (293), (295), (297), (350), p. 14A

INTERNATIONAL TRUCK AND ENGINE CORPORATION

THIS PRINT IS PROVIDED ON A RESTRICTED BASIS AND IS NOT TO BE USED IN ANY WAY DETRIMENTAL TO THE INTEREST OF INTERNATIONAL TRUCK AND ENGINE CORPORATION.

ELECTRICAL CIRCUIT DIAGRAM CHAPTER 10

CONNECTOR BODY COMPOSITES: CONNECTOR BODY COMPOSITES (MATING END VIEW) Continued

HYD ABS RIGHT FRONT WHEEL SPEED SENSOR (292)

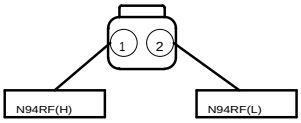

CONNECTOR - 3539777C1
CONN LOCK - 3539784C1
TERMINAL - 1651969C1

CAV	CIRCUIT	GAUGE	COLOR	TERMINAL
1	DKBL/WTS	16	DK BL	3572625C1
2	YL/WTS	16	YL	3572625C1

HYD ABS LEFT REAR WHEEL SPEED SENSOR (293)

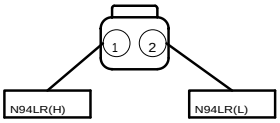

CONNECTOR - 3539777C1
CONN LOCK - 3539784C1
TERMINAL - 1651969C1

HYD ABS RIGHT REAR WHEEL SPEED SENSOR (295)

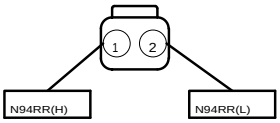

CONNECTOR - 3539777C1
CONN LOCK - 3539784C1
TERMINAL - 1651965C1

AIR OR HYD ABS WARNING LIGHT (297)

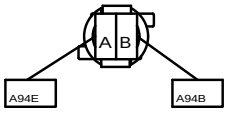

CONNECTOR - 2001688C1
TERMINAL - 2001704C1

ABS ECU (350)

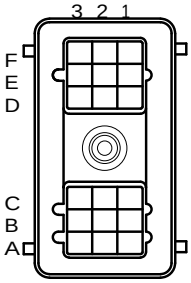

CONNECTOR - 3554088C1

CAV	CIRCUIT	GAUGE	COLOR	TERMINAL
A1	LTGN/WH	16	LT GN	3554090C1
A2	N97Z	16	OR	3554090C1
A3	PLUG	---	---	3554386C1
B1	LTBL/WH	16	LT BL	3554090C1
B2	PLUG	---	---	3554386C1
B3	PLUG	---	---	3554386C1
C1	VT/WH	16	VT	3554090C1
C2	PLUG	---	---	3554386C1
C3	PLUG	---	---	3554386C1
D1	BK/WH	16	BK	3554090C1
D2	PK/WH	16	PK	3554090C1
D3	TN/WH	16	TN	3554090C1
E1	BN/WH	16	BN	3554090C1
E2	YL/WH	16	YL	3554090C1
E3	DKBL/WH	16	DK BL	3554090C1
F1	RD/WH	16	RD	3554090C1
F2	OR/WH	16	OR	3554090C1
F3	GY/WH	16	GY	3554090C1

CHK	DATE	CHANGE	REV	REFERENCE	DRAWN	NAME		
					U00K640	PB30500, PC30500, RE30030		
					RELEASE NO. 50342E	DATE 12DEC05	PART NO. AF08-54925	SHEET 14A

Figure 95 Connector Composites (292), (293), (295), (297), (350)

Connector Composites (350X2), (351), (352), (353), p. 15

INTERNATIONAL TRUCK AND ENGINE CORPORATION

THIS PRINT IS PROVIDED ON A RESTRICTED BASIS AND IS NOT TO BE USED IN ANY WAY DETRIMENTAL TO THE INTEREST OF INTERNATIONAL TRUCK AND ENGINE CORPORATION.

ELECTRICAL CIRCUIT DIAGRAM CHAPTER 10

CONNECTOR BODY COMPOSITES: CONNECTOR BODY COMPOSITES (MATING END VIEW) Continued

ABS6 ECU
(350X2)

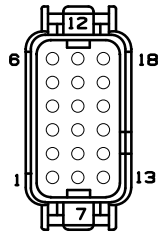

CONNECTOR - 3597379C1

CAV	CIRCUIT	GAUGE	COLOR	TERMINAL
1	OR/WH	16	OR	1680205C1
2	GY/WH	16	GY	1680205C1
3	YL/WH	16	YL	1680205C1
4	DKBL/WH	16	DK BL	1680205C1
5	PLUG	---	---	0453233C1
6	PLUG	---	---	0453233C2
7	BN/WTS	16	BN	1680205C1
8	BK/WTS	16	BK	1680205C1
9	LTBL/WTS	16	LT BL	1680205C1
10	VT/WTS	16	VT	1680205C1
11	BN/WH	16	BN	1680205C1
12	BK/WH	16	BK	1680205C1
13	RD/WTS	16	RD	1680205C1
14	LTGN/WTS	16	LT GN	1680205C1
15	RD/WH	16	RD	1680205C1
16	LTGN/WH	16	LT GN	1680205C1
17	LTBL/WH	16	LT BL	1680205C1
18	VT/WH	16	VT	1680205C1

W/ABS6 AIR BRAKES

LEFT REAR
WHEEL SENSOR
(351)

CONNECTOR - 1684261C1
CONNECTOR
BODY LOCK - 1684263C1

CAV	CIRCUIT	GAUGE	COLOR	TERMINAL
1	GY/WH	16	GY	3572625C1
2	OR/WH	16	OR	3572625C1

RIGHT REAR
WHEEL SENSOR
(352)

CONNECTOR - 1684261C1
CONNECTOR
BODY LOCK - 1684263C1

CAV	CIRCUIT	GAUGE	COLOR	TERMINAL
1	DKBL/WH	16	DK BL	3572625C1
2	YL/WH	16	YL	3572625C1

LEFT REAR
MODULER VALVE
(353)

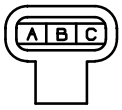

CONNECTOR - 1686834C1
CONNECTOR
BODY LOCK - 1664408C1

CAV	CIRCUIT	GAUGE	COLOR	TERMINAL	SEAL/SLEEVE
A	BK/WH	16	BK	2033819C1	1652325C1
B	RD/WH	16	RD	2033819C1	1652325C1
C	BN/WH	16	BN	2033819C1	1652325C1

CHK	DATE	CHANGE	REV	REFERENCE	DRAWN	NAME	
CNA	6JAN06	ADDED GEN4 EFFECTS	A	50342E	GSC2	PB30500, PC30500, RE30030	
					RELEASE NO. 56878R	DATE 15JUL03	PART NO. AE08-54925 SHEET 15

Figure 96 Connector Composites (350X2), (351), (352), (353)

Connector Composites (354), (373), (374), (377), p. 16

INTERNATIONAL TRUCK AND ENGINE CORPORATION

THIS PRINT IS PROVIDED ON A RESTRICTED BASIS AND IS NOT TO BE USED IN ANY WAY DETRIMENTAL TO THE INTEREST OF INTERNATIONAL TRUCK AND ENGINE CORPORATION.

ELECTRICAL CIRCUIT DIAGRAM CHAPTER 10

CONNECTOR BODY COMPOSITES: CONNECTOR BODY COMPOSITES (MATING END VIEW) Continued

RIGHT REAR MODULER VALVE (354)

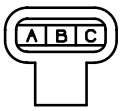

CONNECTOR - 1686834C1
CONNECTOR BODY LOCK - 1664408C1

CAV	CIRCUIT	GAUGE	COLOR	TERMINAL	SEAL/SLEEVE
A	VT/WH	16	VT	2033819C1	1652325C1
B	LTGN/WH	16	LT GN	2033819C1	1652325C1
C	LTBL/WH	16	LT BL	2033819C1	1652325C1

ATA(+)DATA LINK(RED) (373)

PLATFORM HARNESS

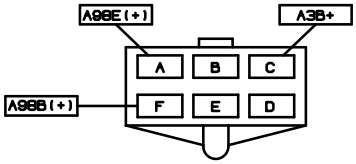

CONNECTOR - 0892136C1
TERMINAL(18AWG) - 0879630R1
TERMINAL(14AWG) - 0188396R1
CONN CAP - 1654427C1

ATA(-)DATA LINK (BLUE) (374)

PLATFORM HARNESS

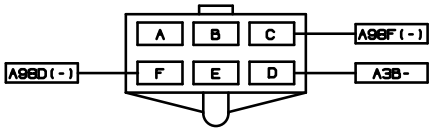

CONNECTOR - 0892136C1
TERMINAL(18AWG) - 0879630R1
TERMINAL(14AWG) - 0188396R1
CONN CAP - 1654426C1

AIR ABS/ALLISON TRANSMISSION INTERCONNECT(377)

PLATFORM HARNESS

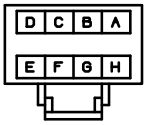

CAVITY	CIRCUIT # AIR BRKS	CIRCUIT # HYD BRKS
A	A186	A186
B	A187	A187
C	A125	A125
D	---	A94J
E	A24D	A24D
F	A13J	A13J
G	A70F	---
H	A24C	A24C

CONNECTOR - 2005835C1
CONN COVER - 2005836C1
TERMINAL - 1661209C1 (16AWG)
TERMINAL - 1661208C1 (18AWG)
TERMINAL - 1661211C1 (12AWG)
CONN LOCK - 2006503C1

PLATFORM OVERLAY HARNESS

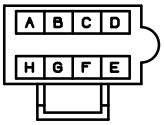

CAVITY	CIRCUIT # AIR BRKS	CIRCUIT # HYD BRKS
A	A186	92-G
B	A187	187,92A*
C	A125	115,125*
D	---	94J,113A*
E	---	---
F	A13J	13J
G	A70F	---
H	---	---

CONNECTOR - 2005836C1
CONN LOCK - 2006504C1
TERMINAL(18AWG) - 1661212C1
TERMINAL(16,14AWG) - 1661213C1

* W/ALLISON LCT XMSN

CHK	DATE	CHANGE	REV	REFERENCE	DRAWN	NAME
CNA	6JAN06	ADDED GEN4 EFFECTS	A	50342E	GSC2	PB30500, PC30500, RE30030
					RELEASE NO. 56878R	DATE 15JUL03 · PART NO. AE08-54925 · SHEET 16

Figure 97 Connector Composites (354), (373), (374), (377)

Connector Composites (382), (384), (391), (392), p. 17

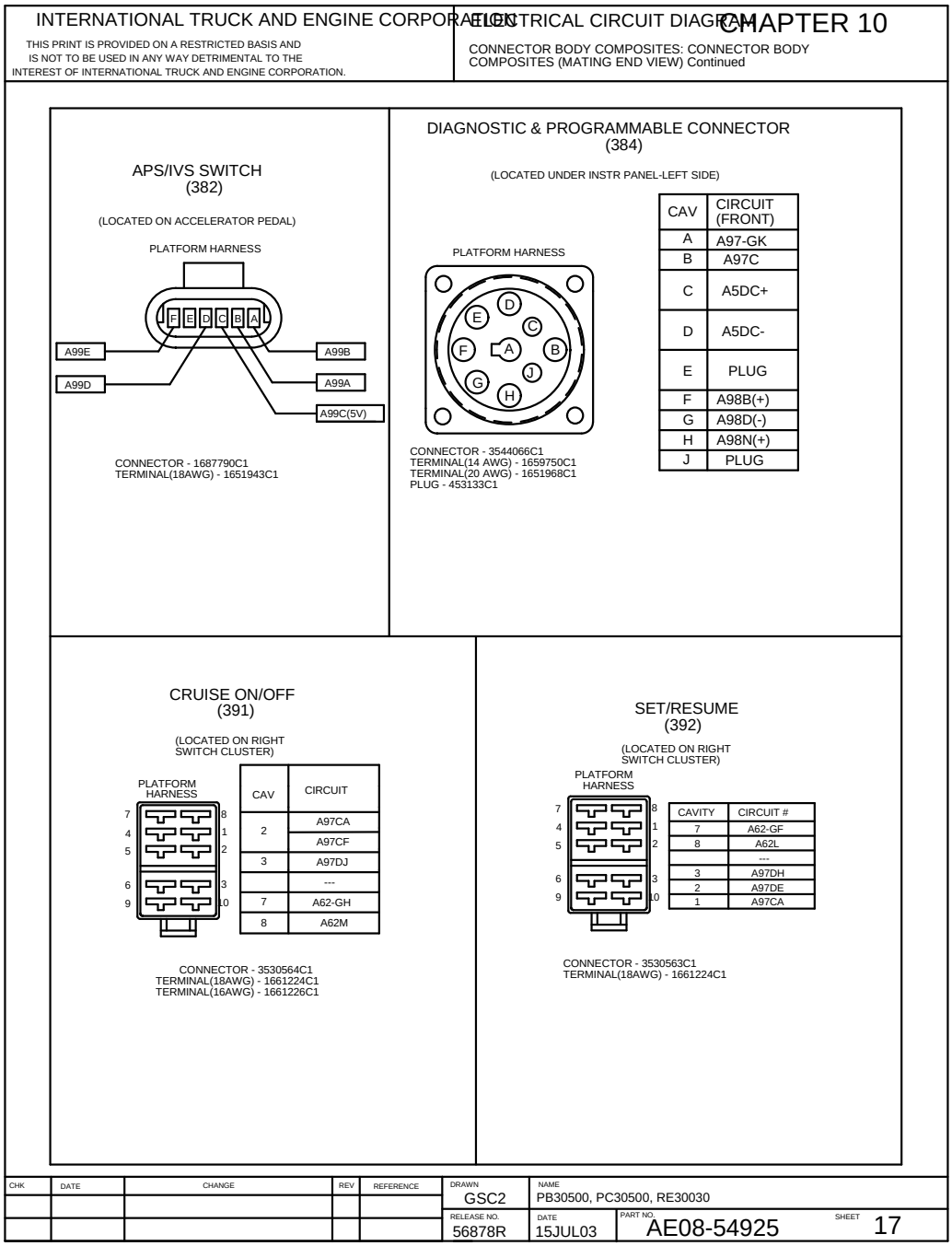

Figure 98 Connector Composites (382), (384), (391), (392)

Connector Composites (412), (420), (426), (523), p. 18

INTERNATIONAL TRUCK AND ENGINE CORPORATION

THIS PRINT IS PROVIDED ON A RESTRICTED BASIS AND IS NOT TO BE USED IN ANY WAY DETRIMENTAL TO THE INTEREST OF INTERNATIONAL TRUCK AND ENGINE CORPORATION.

ELECTRICAL CIRCUIT DIAGRAM CHAPTER 10

CONNECTOR BODY COMPOSITES: CONNECTOR BODY COMPOSITES (MATING END VIEW) Continued

POSITIVE BATT CONN (412)

(LOCATED BY BATTERY)

STARTING HARNESS

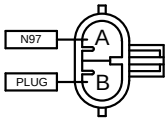

CONNECTOR - 2031520C1
CONN LOCK - 2033927C1
TERMINAL - 2025423C1

SHIFT SELECTOR CONNECTOR (420)

CHASSIS OVERLAY HARNESS

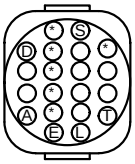

CONNECTOR ASSY-3522536C91
TERMINAL-3517243C1
CONNECTOR LOCK-3518287C1
CAVITY PLUG-3517247C1

* SEALED

CAVITY	CIRCUIT	CAVITY	CIRCUIT
A	N170	L	PLUG
B	N171	M	N175
C	N172	N	N124B
D	N173	P	N143B
E	N174	R	N136A
F	SEALED	S	N180
G	SEALED	T	N186A
H	SEALED	U	N187
J	SEALED	V	N188
K	SEALED	W	SEALED

BATTERY CONNECTION (426)

BATTERY HARNESS

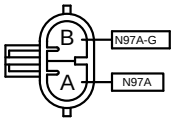

CONNECTOR - 2031520C1
CONN LOCK - 2033927C1
TERMINAL - 2025423C1

XMSN/PLATFORM HARNESS INTERCONNECT (523)

CHASSIS HARNESS OVERLAY

CONNECTOR-3522538C91
TERMINAL-3518291C1
CONNECTOR LOCK-3518289C1
PLUG-3517247C1

ENGINE HARNESS

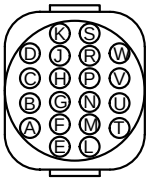

CONNECTOR-3522537C91
TERMINAL-3517243C1
CONNECTOR LOCK-3518287C1
PLUG-3517247C1

* W/WTEC III RETARDER

CAVITY	CAVITY WTEC	CAVITY LCT	CAVITY	CAVITY WTEC	CAVITY LCT
A	N170	PLUG	L	N163A	PLUG
B	N171	PLUG	M	N135*	PLUG
C	N172	PLUG	N	N164*	128E
D	N173	PLUG	P	N115	113
E	N174	PLUG	R	PLUG	PLUG
F	N175	110	S	PLUG	PLUG
G	N180	123	T	N70C*	PLUG
H	N124	125	U	N105B*	PLUG
J	N143A	PLUG	V	N92A	PLUG
K	N136A	PLUG	W	PLUG	PLUG

CHK	DATE	CHANGE	REV	REFERENCE	DRAWN	NAME		
					GSC2	PB30500, PC30500, RE30030		
					RELEASE NO. 56878R	DATE 15JUL03	PART NO. AE08-54925	SHEET 18

Figure 99 Connector Composites (412), (420), (426), (523)

Connector Composite (523), p. 18A

INTERNATIONAL TRUCK AND ENGINE CORPORATION

THIS PRINT IS PROVIDED ON A RESTRICTED BASIS AND IS NOT TO BE USED IN ANY WAY DETRIMENTAL TO THE INTEREST OF INTERNATIONAL TRUCK AND ENGINE CORPORATION.

ELECTRICAL CIRCUIT DIAGRAM CHAPTER 10

CONNECTOR BODY COMPOSITES: CONNECTOR BODY COMPOSITES (MATING END VIEW) Continued

XMSN CHASSIS CONNECTOR
(523)
ENGINE HARNESS

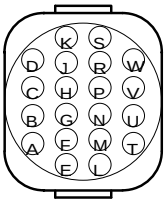

CONNECTOR - 3522537C91
CONNECTOR
BODY LOCK - 3518287C1

CAV	CIRCUIT	GAUGE	COLOR	TERMINAL
A	K#134 @,@@	18	OR	3517243C1
A	K#170 *,**	18	OR	3517243C1
B	K#163B @,@@	18	YL	3517243C1
B	K#171 *,**	18	LT GN	3517243C1
C	K#169A @,@@	18	GY	3517243C1
C	K#172 *,**	18	LT BL	3517243C1
C	K#172 *	18	DK BL	3517243C1
D	K#173 *,**	18	YL	3517243C1
E	K#174 *,**	18	TN	3517243C1
F	K#175 *,**	18	LT GN	3517243C1
G	K#180 *,**	18	DK BL	3517243C1
H	K#112B @,@@	18	PK	3517243C1
H	K#124 *,**	18	PK	3517243C1
J	K#103C @,@@	18	YL	3517243C1
J	K#143A *,**	18	GY	3517243C1
K	K#136A *,**	18	PK	3517243C1
K	K#170A @,@@	18	PK	3517243C1
L	K#161A @,@@	18	OR	3517243C1
L	K#161E *	18	YL	3517243C1
L	K#163A **	18	DK BL	3517243C1
M	K#135 *,**	18	LT GN	3517243C1
M	K#158A @@	18	LT GN	3517243C1
N	K#156 @,@@	18	YL	3517243C1
N	K#164 *,**	18	YL	3517243C1
P	K#115 *,**	18	LT GN	3517243C1
P	K#129 @,@@	18	LT GN	3517243C1
R	K#103D @,@@	18	YL	3517243C1
R	K#161E *,**	18	YL	3517243C1
R	K#178 *	18	TN	3517243C1
S	K#121A @,@@	18	LT GN	3517243C1
S	K#154A *,**	18	WH	3517243C1
T	K70C *,**,@@	18	OR	3517243C1
U	K#105B *,**	18	LT GN	3517243C1
U	K#164B @@	18	DK BL	3517243C1
V	K92H *,**,@@	18	GY	3517243C1
W	K#178A @@	18	BN	3517243C1

* W/WTEC XMSN
** W/WTEC XMSN W/RTDR
@ W/WTEC GEN IV
@@ W/WTEC GEN IV W/RTDR

NOTE:- V8 ENGINE IS N/RETARDER

CHK	DATE	CHANGE	REV	REFERENCE	DRAWN	NAME		
					UOOK640	PB30500, PC30500, RE30030		
					RELEASE NO. 50342E	DATE 12DEC05	PART NO. AF08-54925	SHEET 18A

Figure 100 Connector Composite (523)

Connector Composite (523), p. 18B

INTERNATIONAL TRUCK AND ENGINE CORPORATION

THIS PRINT IS PROVIDED ON A RESTRICTED BASIS AND IS NOT TO BE USED IN ANY WAY DETRIMENTAL TO THE INTEREST OF INTERNATIONAL TRUCK AND ENGINE CORPORATION.

ELECTRICAL CIRCUIT DIAGRAM CHAPTER 10

CONNECTOR BODY COMPOSITES: CONNECTOR BODY COMPOSITES (MATING END VIEW) Continued

XMSN CHASSIS CONNECTOR (523)

CHASSIS HARNESS OVERLAY

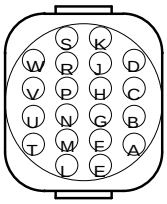

CONNECTOR - 3522538C91
CONNECTOR
BODY LOCK - 3518287C1

CAV	CIRCUIT	GAUGE	COLOR	TERMINAL
A	N134	18	OR	3518291C1
B	N163	18	YL	3518291C1
C	N169A	18	GY	3518291C1
D	PLUG	---	---	3518314C1
E	PLUG	---	---	3518314C2
F	PLUG	---	---	3518314C3
G	PLUG	---	---	3518314C4
H	N112 **	18	PK	3518291C1
J	N103C **	18	YL	3518291C1
K	N170A	18	PK	3518291C1
L	N161A **	18	OR	3518291C1
M	N158 **	18	LT GN	3518291C1
N	N156 **	18	YL	3518291C1
P	N129	18	LT GN	3518291C1
R	N103 @	18	YL	3518291C1
S	N121A @	18	LT GN	3518291C1
T	N70C **	18	OR	3518291C1
U	N164B **	18	DK BL	3518291C1
V	N92H **	18	GY	3518291C1
W	PLUG	---	---	3518314C1

* WTEC GEN IV
** WTEC XMSN W/RTDR
@ WTEC GEN IV W/RTDR

CHK	DATE	CHANGE	REV	REFERENCE	DRAWN	NAME		
					UOOK640	PB30500, PC30500, RE30030		
					RELEASE NO. 50342E	DATE 12DEC05	PART NO. AE08-54925	SHEET 18B

Figure 101 Connector Composite (523)

Connector Composites (569), (644F), (644M), (918), (919), p. 19

INTERNATIONAL TRUCK AND ENGINE CORPORATION

THIS PRINT IS PROVIDED ON A RESTRICTED BASIS AND IS NOT TO BE USED IN ANY WAY DETRIMENTAL TO THE INTEREST OF INTERNATIONAL TRUCK AND ENGINE CORPORATION.

ELECTRICAL CIRCUIT DIAGRAM CHAPTER 10

CONNECTOR BODY COMPOSITES: CONNECTOR BODY COMPOSITES(MATING END VIEW) Continued

ABS SIGNAL GROUND RELAY
W/ALLISON WTEC XMSN
(569)

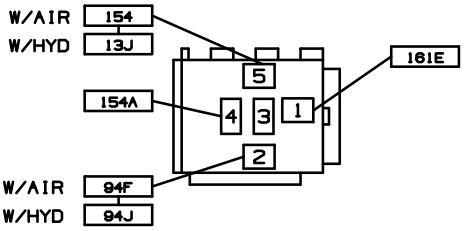

CONNECTOR - 593385C1
CONN LOCK - 593387C1
TERMINAL(16AWG) - 1661709C1
TERMINAL(18AWG) - 1659673C1

ABS SIGNAL GROUND RELAY
W/ALLISON LCT XMSN
(569)

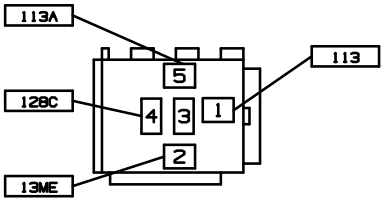

CONNECTOR - 593385C1
CONN LOCK - 593387C1
TERMINAL(16AWG) - 1661709C1
TERMINAL(18AWG) - 1659673C1

PLATFORM OVERLAY HARNESS
(644F)

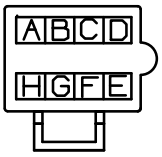

CAV	AIR 644F	HYD 644F
A	---	---
B	A187	A187
C	A125	A115
D	---	A154A
E	---	161E
F	A186A	A186
G	A163*	A188
H	A143H*	---

CONNECTOR - 2005836C1

* W/RETARDER

RETARDER OUTPUT SWITCH
(918)
(LOCATED ON DASH)

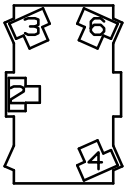

CAV	CIR
2	A24W
3	A24X
4	A24Y
6	A24Z

CONNECTOR-1687783C1
TERMINAL-1661224C1

CHASSIS OVERLAY
CONNECTOR
(644M)

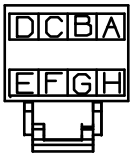

CAV	CIRCUIT	GAUGE	COLOR	TERMINAL
A	---	---	---	---
B	N62R	18	DK BL	1661208C1
C	N129	18	LT GN	1661208C1
D	N121A	18	LT GN	1661208C1
E	N103	18	YL	1661208C1
F	---	---	---	---
G	N161A	18	OR	1661208C1
H	N103C	18	YL	1661208C1

CONNECTOR - 2005835C1
CONNECTOR BODY LOCK - 2006503C1

RETARDER ON/OFF SWITCH
(919)
(LOCATED ON DASH)

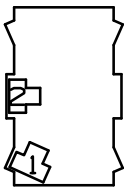

CAV	CIR
1	A163
2	A143H

CONNECTOR-1673743C1
TERMINAL-1661226C1

CHK	DATE	CHANGE	REV	REFERENCE	DRAWN	NAME
CNA	6JAN06	ADDED GEN4 EFFECTS	A	50342E	GSC2	PB30500, PC30500, RE30030
					RELEASE NO. 56878R	DATE 16JUL03 / PART NO. AE08-54925 / SHEET 19

Figure 102 Connector Composites (569), (644F), (644M), (918), (919)

Connector Composites (922), (922A), (925), (926), (1133), p. 20

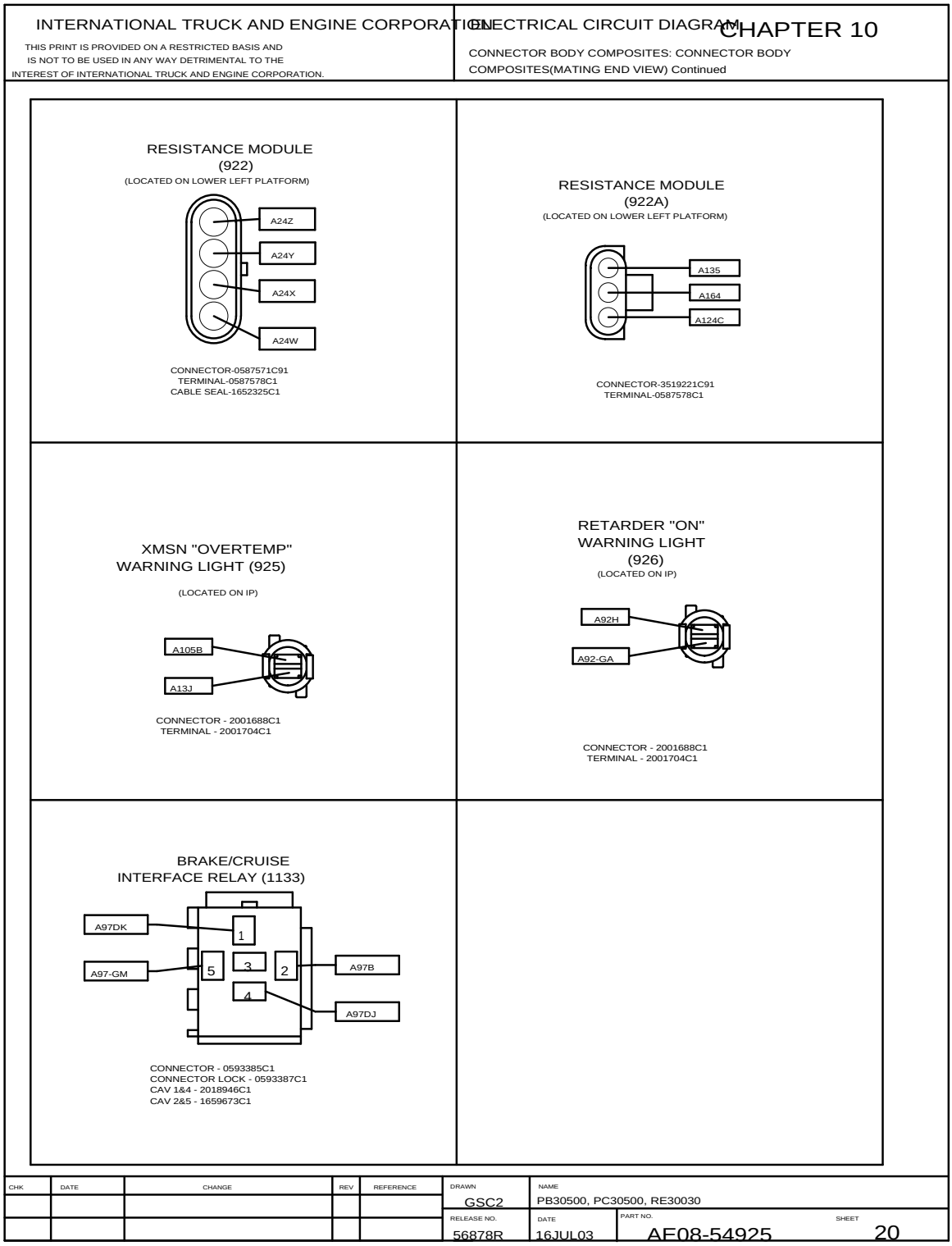

Figure 103 Connector Composites (922), (922A), (925), (926), (1133)

Connector Composites (1601F), (1601M), (1707), (1707C), (3043), p. 21

INTERNATIONAL TRUCK AND ENGINE CORPORATION

THIS PRINT IS PROVIDED ON A RESTRICTED BASIS AND IS NOT TO BE USED IN ANY WAY DETRIMENTAL TO THE INTEREST OF INTERNATIONAL TRUCK AND ENGINE CORPORATION.

ELECTRICAL CIRCUIT DIAGRAM CHAPTER 10

CONNECTOR BODY COMPOSITES: CONNECTOR BODY COMPOSITES(MATING END VIEW) Continued

CHASSIS OVERLAY CONNECTOR (1601F)

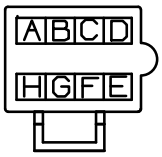

CONNECTOR - 2005836C1
CONNECTOR BODY LOCK - 2006504C1

CAV	CIRCUIT	GAUGE	COLOR	TERMINAL
A	N92H	18	GY	1661212C1
B	N164B	18	DK BL	1661212C1
C	N70F	14	OR	3534167C1
D	N158	18	LT GN	1661212C1
E	N156	18	YL	1661212C1
F	N112	18	PK	1661212C1
G	---	---	---	---
H	---	---	---	---

W/GEN IV & W/RETARDER

CHASSIS OVERLAY HARNESS (1601M)

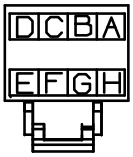

CONNECTOR - 2005835C1

TERMINATING RESISTOR ASSY 2 (PLATFORM)

MATES W/3519178C91 (RESISTOR ASSY) (1707)

J1939 HARNESS

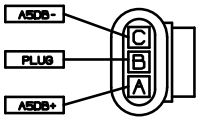

CONNECTOR - 1667741C1
CONNECTOR LOCK -1667771C1
TERMINAL - 1661875C1
CABLE SEAL - 1661872C1

TERMINATING RESISTOR ASSY (PLATFORM) (1707C)

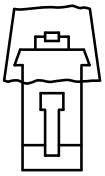

3519178C91
RESISTOR ASSY
FOR J1939
MATES W/1667741C1872C1
CONNECTOR (572A)

LCT ECONOMY MODE SWITCH (3043)
(LOCATED BEHIND SWITCH PANEL)

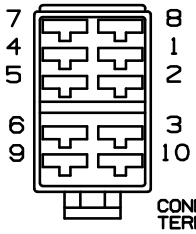

CAVITY	CIRCUIT
1	---
2	A13MG
3	---
4	---
5	A128D
6	A110
7	A186
8	A187
9	---
10	---

CONNECTOR - 3546261C1
TERMINAL - 1661224C1

CHK	DATE	CHANGE	REV	REFERENCE	DRAWN	NAME
CNA	6JAN06	ADDED GEN4 EFFECTS	A	50342E	GSC2	PB30500, PC30500, RE30030
					RELEASE NO. 56878R	DATE 16JUL03 / PART NO. AE08-54925 / SHEET 21

Figure 104 Connector Composites (1601F), (1601M), (1707), (1707C), (3043)

Connector Composites (1708), (1709), (1850), p. 21A

INTERNATIONAL TRUCK AND ENGINE CORPORATION

THIS PRINT IS PROVIDED ON A RESTRICTED BASIS AND IS NOT TO BE USED IN ANY WAY DETRIMENTAL TO THE INTEREST OF INTERNATIONAL TRUCK AND ENGINE CORPORATION.

ELECTRICAL CIRCUIT DIAGRAM CHAPTER 10

CONNECTOR BODY COMPOSITES: CONNECTOR BODY COMPOSITES(MATING END VIEW) Continued

J1939 CONNECTOR (1708)

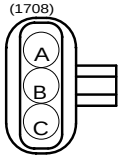

CONNECTOR - 1667740C1
CONNECTOR BODY LOCK - 1667771C1

CAV	CIRCUIT	GAUGE	COLOR	TERMINAL	SEAL/SLEEVE
A	N5DA+	18	YL	1667742C1	3568570C1
B	PLUG	---	---	2025431C1	N/A
C	N5DA-	18	GN	1667742C1	3568570C1

J1939 CONNECTOR (1709)

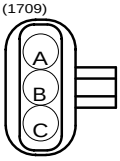

CONNECTOR - 1667740C1
CONNECTOR BODY LOCK - 1667771C1

CAV	CIRCUIT	GAUGE	COLOR	TERMINAL	SEAL/SLEEVE
A	N5DE+	18	YL	1667742C1	3568570C1
B	PLUG	---	---	2025431C1	N/A
C	N5DE-	18	GN	1667742C1	3568570C1

J1939 CONNECTOR WTEC SHIFTER (1709)

CONNECTOR - 1667741C1
CONNECTOR BODY LOCK - 1667771C1

CAV	CIRCUIT	GAUGE	COLOR	TERMINAL	SEAL/SLEEVE
A	N5DD+	18	YL	1661875C1	3568570C1
B	PLUG	---	---	2025431C1	N/A
C	N5DD-	18	GN	1661875C1	3568570C1

WTEC SHIFTER SELECTOR (1850)

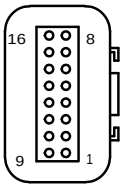

CONNECTOR - 3605446C91

CAV	CIRCUIT	GAUGE	COLOR	TERMINAL
1	PLUG	---	---	3518314C1
2	PLUG	---	---	3518314C1
3	N62R	18	DK BL	3517243C1
4	PLUG	---	---	3518314C1
5	N169A	18	GY	3517243C1
6	PLUG	---	---	3518314C1
7	PLUG	---	---	3518314C1
8	N5DE+	18	YL	3517243C1
9	PLUG	---	---	3518314C1
10	PLUG	---	---	3518314C1
11	N134	18	OR	3517243C1
12	N163	18	YL	3517243C1
13	N170A	18	PK	3517243C1
14	PLUG	---	---	3518314C1
15	N5DE-	18	GN	3517243C1
16	PLUG	---	---	3518314C1

CHK	DATE	CHANGE	REV	REFERENCE	DRAWN	NAME		
					U00K640	PB30500, PC30500, RE30030		
					RELEASE NO. 50342E	DATE 12DEC05	PART NO. AE08-54925	SHEET 21A

Figure 105 Connector Composites (1708), (1709), (1850)

Connector Composites (3114), (3115), (3116), (3117), (3118), (3119), p. 22

INTERNATIONAL TRUCK AND ENGINE CORPORATION

THIS PRINT IS PROVIDED ON A RESTRICTED BASIS AND IS NOT TO BE USED IN ANY WAY DETRIMENTAL TO THE INTEREST OF INTERNATIONAL TRUCK AND ENGINE CORPORATION.

ELECTRICAL CIRCUIT DIAGRAM CHAPTER 10

CONNECTOR BODY COMPOSITES - MATING VIEW SHOWN

MSM MODULE (3114)

(LOCATED ON DASH PANEL BELOW INSTRUMENT CLUSTER)

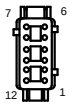

(GRAY)

CONNECTOR - 3553404C1
BODY LOCK - 3553460C1
TERMINAL - 3518963C1
PLUG - 3527276C1

CAV	CIR	GAUGE	COLOR
1	A97AF	18	VT
2	PLUG	-	-
3	PLUG	-	-
4	PLUG	-	-
5	A5DD+	18	YL
6	A5DD-	18	GN
7	A97AB	18	VT
8	A97-G	18	WH
9	A97T	18	VT
10	A18-G	18	WH
11	PLUG	-	-
12	PLUG	-	-

MSM MODULE (3115)

(LOCATED ON DASH PANEL BELOW INSTRUMENT CLUSTER)

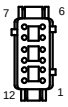

(BLACK)

CONNECTOR - 3586750C1
BODY LOCK - 3553460C1
TERMINAL - 3518963C1
PLUG - 3527276C1

CAV	CIR	GAUGE	COLOR
1	A19B	18	GY
2	A97AA	18	VT
3	A19-GD	18	WH
4	PLUG	-	-
5	PLUG	-	-
6	PLUG	-	-
7	PLUG	-	-
8	A97CF	18	VT
9	A97DE	18	VT
10	A24C	18	GY
11	A24D	18	GY
12	PLUG	-	-

WIF MODULE (3116)

(LOCATED NEAR DATA LINK CONNECTOR)

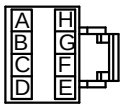

CONNECTOR - 2005835C1
BODY LOCK - 2006503C1
TERMINAL - 1661208C1

CAV	CIR	GAUGE	COLOR
A	A19E	18	GY
B	A19F	18	GY
C	A19-G	18	WH
D	A19-GC	18	WH
E	A19-GB	18	WH
F	A19C	18	GY
G	A19K	18	GY
H	A19-GD	18	WH

ENGINE BRAKE LEVEL SW (3117)

(LOCATED BELOW INSTRUMENT CLUSTER IN SWITCH PANEL)

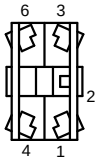

CONNECTOR - 1687783C1
TERMINAL - 1661224C1

CAV	CIR	GAUGE	COLOR
1	-	-	-
2	A24B	18	GY
3	A24C	18	GY
4	-	-	-
6	A24D	18	GY

ENGING BRAKE ON/OFF SWITCH (3118)

(LOCATED BELOW INSTRUMENT CLUSTER IN SWITCH PANEL)

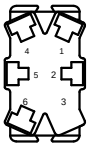

CONNECTOR - 1673743C1
TERMINAL - 1661224C1

CAV	CIR	GAUGE	COLOR
1	A24B	18	GY
2	A24-G	18	GY
4	-	-	-
5	-	-	-
6	-	-	-

CLUTCH PEDAL SW (3119)

(LOCATED ON CLUTCH PEDAL)

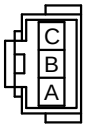

CONNECTOR - 1661199C1
TERMINAL - 1661212C1

CAV	CIR	GAUGE	COLOR
A	-	-	-
B	A97A	16	VT
C	A97PP	16	VT

CHK	DATE	CHANGE	REV	REFERENCE	DRAWN	NAME		
					U00VTT1	PB30500, PC30500, RE30030		
					RELEASE NO. 56878R	DATE 18JUN03	PART NO. AE08-54925	SHEET 22

Figure 106 Connector Composites (3114), (3115), (3116), (3117), (3118), (3119)

Connector Composites (6000F), (6000M), p. 23

INTERNATIONAL TRUCK AND ENGINE CORPORATION

THIS PRINT IS PROVIDED ON A RESTRICTED BASIS AND IS NOT TO BE USED IN ANY WAY DETRIMENTAL TO THE INTEREST OF INTERNATIONAL TRUCK AND ENGINE CORPORATION.

ELECTRICAL CIRCUIT DIAGRAM CHAPTER 10

CONNECTOR BODY COMPOSITES: CONNECTOR BODY COMPOSITES(MATING END VIEW) Continued

ENGINE HARN CONNECTOR (6000F)

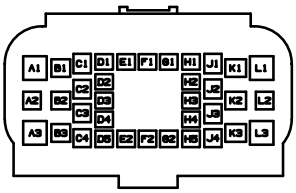

CONNECTOR - 2024626C1
CONNECTOR BODY LOCK - 2024627C1-2

CAV	CIRCUIT	GAUGE	COLOR	TERMINAL
A1	V97TA	12	VT	1661227C1
A2	---	---	---	---
A3	V17A	10	PK	1661227C1
B1	---	---	---	---
B2	---	---	---	---
B3	V98N(+)	14	BK	1661218C1
C1	V3A+	18	BK	1661208C1
C2	V3A-	18	BK	1661208C1
C3	---	---	---	---
C4	V97HX	14	VT	3566715C1
D1	V17S	18	PK	1661261C1
D2	V97LC	16	VT	1661261C1
D3	---	---	---	---
D4	V17	18	PK	1661261C1
D5	V13K	16	PK	1661261C1
E1	V97LA	18	VT	1661261C1
E2	V97Z	18	VT	1661261C1
F1	V97BL	18	VT	1661261C1
F2	V39	16	GY	1661261C1
G1	V97J	18	VT	1661261C1
G2	V23	18	TN	1661261C1
H1	V97CD	18	VT	1661261C1
H2	V5+	18	YL	1661261C1
H3	V97HY	16	VT	1661261C1
H4	V23A	18	TN	1661261C1
H5	V97UA	18	VT	1661261C1
J1	---	---	---	---
J2	V39A	16	GY	1661209C1
J3	V14B	12	RD	3566715C1
J4	V5-	18	GN	1661208C1
K1	V97HB	12	VT	1661219C1
K2	---	---	---	---
K3	---	---	---	---
L1	V17D	10	PK	1661227C1
L2	---	---	---	---
L3	V97X	12	VT	1661227C1

CONTROL BOX ENGINE (6000M)

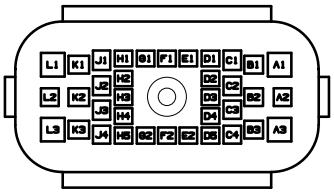

CONNECTOR - 2024625C1
CONNECTOR BODY LOCK - 2024627C1-2

CAV	CIRCUIT	GAUGE	COLOR	TERMINAL	SEAL/SLEEVE
A1	K97TA	10	PL	2025425C1	1667735C1
A2	PLUG	---	---	0587579C1	N/A
A3	K17A	10	PK	2025425C1	1667735C1
B1	PLUG	---	---	0587579C1	N/A
B2	PLUG	---	---	0587579C1	N/A
B3	K98N(+)*	16	BK	2025421C1	2025429C1
C1	K3A+	18	DK BL	2033911C1	1652325C1
C2	K3A-	18	GY	2033911C1	1652325C1
C3	PLUG	---	---	0587579C1	N/A
C4	K97AZ**	14	VT	2033912C1	0589391C1
D1	K17S	18	PK	1667742C1	1661872C1
D2	K97LC	16	VT	1667742C1	1661872C1
D3	PLUG	---	---	0587579C1	N/A
D4	K17	18	PK	1667742C1	1661872C1
D5	K13K	16	PK	1667742C1	1661872C1
E1	K97LA	18	VT	1667742C1	1661872C1
E2	K97Z	18	VT	1667742C1	1661872C1
F1	K97BL	18	VT	1667742C1	1661872C1
F2	K39	16	GY	1667742C1	1661872C1
G1	K97J	18	VT	1667742C1	1661872C1
G2	K23	18	TN	1667742C1	1661872C1
H1	K97CD	18	VT	1667742C1	1661872C1
H2	K5+	18	YL	1667742C1	3568570C1
H2	K5A+	18	YL	1667742C1	3568570C1
H3	K97H	16	VT	1667742C1	1661872C1
H4	K23A	18	TN	1667742C1	1661872C1
H5	K97UA	18	VT	1667742C1	1661872C1
J1	PLUG	---	---	0587579C1	N/A
J2	K39A	16	GY	2033911C1	1652325C1
J3	K14B	12	RD	2033912C1	0589390C1
J4	K5-	18	GN	2033911C1	3517771C1
J4	K5A-	18	GN	2033911C1	3517771C1
K1	K97HA	10	VT	2025423C1	2025427C1
K2	PLUG	---	---	0587579C1	N/A
K3	PLUG	---	---	0587579C1	N/A
L1	K17D	10	PK	2025425C1	1667735C1
L2	PLUG	---	---	0587579C1	N/A
L3	K97X	10	VT	2025425C1	1667735C1

* V8 ENGINE W/LCT,W/WTEC,W/LCT GEN IV & W/WTEC GEN IV
**6NGINE W/WTEC & LCT,W/RTDR,W/WETC & LCT GEN IV
NOTE-CAVITIES THAT MARKED WITH
* & ** ARE COMMON FOR V8 & I6 ENGINE

CHK	DATE	CHANGE	REV	REFERENCE	DRAWN	NAME	
CNA	6JAN06	ADDED CLEAN POWER	A	50342E	GSC2	PB30500, PC30500, RE30030	
		AND GEN4 EFFECTS			RELEASE NO. 56878R	DATE 01JUL03	PART NO. AE08-54925 SHEET 23

Figure 107 Connector Composites (6000F), (6000M)

Connector Composites (6005), (6006), p. 24

INTERNATIONAL TRUCK AND ENGINE CORPORATION

THIS PRINT IS PROVIDED ON A RESTRICTED BASIS AND IS NOT TO BE USED IN ANY WAY DETRIMENTAL TO THE INTEREST OF INTERNATIONAL TRUCK AND ENGINE CORPORATION.

ELECTRICAL CIRCUIT DIAGRAM CHAPTER 10

CONNECTOR BODY COMPOSITES: CONNECTOR BODY COMPOSITES(MATING END VIEW) Continued

ECM2 POWER RELAY (6005)

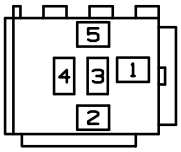

CAV	CIRCUIT	GAUGE	COLOR	TERMINAL
1	V97HB	12	VT	1661710C1
1	V97JA	16	VT	1661710C1
2	V97J	18	VT	1659673C1
3	---	---	---	---
4	V97H	14	VT	1661710C1
4	V97HW	14	VT	1661710C1
5	V97JA	16	VT	1661709C1

CONNECTOR - 0593385C1
CONNECTOR BODY LOCK - 0593387C1

IDM2 POWER RELAY (6006)

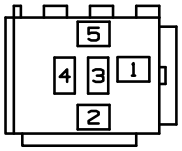

CAV	CIRCUIT	GAUGE	COLOR	TERMINAL
1	V97TC	16	VT	1661710C1
1	V97X	12	VT	1661710C1
3	---	---	---	---
2	V97LA	18	VT	1659673C1
4	V97LD	14	VT	1661710C1
4	V97TA	12	VT	1661710C1
5	V97TC	16	VT	1661709C1

CONNECTOR - 0593385C1
CONNECTOR BODY LOCK - 0593387C1

CHK	DATE	CHANGE	REV	REFERENCE	DRAWN	NAME	
CNA	6JAN06	ADDED CLEAN POWER	A	50342E	GSC2	PB30500, PC30500, RE30030	
		AND GEN4 EFFECTS			RELEASE NO. 56878R	DATE 16JUL03	PART NO. AE08-54925 SHEET 24

Figure 108 Connector Composites (6005), (6006)

Connector Composites (6010), (6011), p. 24A

INTERNATIONAL TRUCK AND ENGINE CORPORATION

THIS PRINT IS PROVIDED ON A RESTRICTED BASIS AND IS NOT TO BE USED IN ANY WAY DETRIMENTAL TO THE INTEREST OF INTERNATIONAL TRUCK AND ENGINE CORPORATION.

ELECTRICAL CIRCUIT DIAGRAM CHAPTER 10

CONNECTOR BODY COMPOSITES: CONNECTOR BODY COMPOSITES(MATING END VIEW) Continued

DATA LINK
(6010)

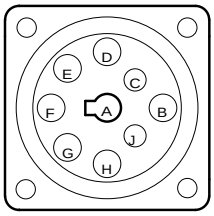

CONNECTOR - 3544066C1

CAV	CIRCUIT	GAUGE	COLOR	TERMINAL
A	K18	6	PK	0373756C2
A	V97-GK	14	WH	1659750C1
B	V97C	14	VT	1659750C1
C	V5A+	18	YL	1651968C1
D	V5A-	18	GN	1651968C1
E	---	---	---	---
F	V3+	14	BK	1659750C1
G	V3-	14	BK	1659750C1
H	V98N(+)	14	BK	1659750C1
J	---	---	---	---

TRUCK/MELROSE
CONNECTOR
(6011)

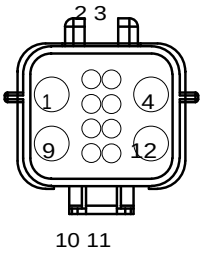

CONNECTOR - 3549412C1
CONNECTOR
BODY LOCK - 364169C1

CAV	CIRCUIT	GAUGE	COLOR	TERMINAL
1	K97-GA	12	WH	3549415C1
2	K3AB+	18	DK BL	3549418C1
3	K3AB-	18	GY	3549418C1
4	K97-GM	16	WH	3549416C1
5	K97B	16	VT	3549417C1
6	K97LC	16	VT	3549417C1
7	K97YB	18	VT	3549418C1
8	K97LA	18	VT	3549418C1
9	K97M	18	VT	3574277C1
10	K97AZ *	14	VT	3549417C1
10	K97AZ **	16	VT	3549417C1
10	K97AZ @	18	VT	3549418C1
11	K97YC	18	VT	3549418C1
12	K97TA	10	PL	3549415C1

* I6 ENGINE W/LCT & WTEC XMSN, W/WTEC & LCT GEN IV, W/RETARDER
** V8 ENGINE W/LCT GEN IV & W/LCT
@ V8 ENGINE W/LCT & WTEC W/LCT & WTEC GEV IV

CHK	DATE	CHANGE	REV	REFERENCE	DRAWN	NAME		
					U00K640	PB30500, PC30500, RE30030		
					RELEASE NO. 50342E	DATE 12DEC05	PART NO. AE08-54925	SHEET 24A

Figure 109 Connector Composites (6010), (6011)

Connector Composites (6012), (6012C), (6020), p. 25

INTERNATIONAL TRUCK AND ENGINE CORPORATION

THIS PRINT IS PROVIDED ON A RESTRICTED BASIS AND IS NOT TO BE USED IN ANY WAY DETRIMENTAL TO THE INTEREST OF INTERNATIONAL TRUCK AND ENGINE CORPORATION.

ELECTRICAL CIRCUIT DIAGRAM CHAPTER 10

CONNECTOR BODY COMPOSITES: CONNECTOR BODY COMPOSITES(MATING END VIEW) Continued

J1939
(6012)

CONNECTOR - 1667741C1
CONNECTOR
BODY LOCK -1667771C1

CAV	CIRCUIT	GAUGE	COLOR	TERMINAL	SEAL/SLEEVE
A	V5B+	18	YL	1661875C1	3568570C1
B	PLUG	---	---	2025431C1	N/A
C	V5B-	18	GN	1661875C1	3568570C1

TERMINATING
RESISTOR ASSY
(CONTROL BOX)
(6012C)

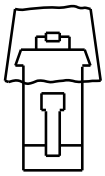

3519178C91
RESISTOR ASSY
FOR J1939
MATES W/1667741C1
CONNECTOR (6012)

ECM2 CONNECTOR
GROUND
(6020)

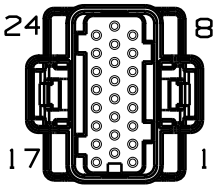

CONNECTOR - 3562311C1

CAV	CIRCUIT	GAUGE	COLOR	TERMINAL
1	PLUG	---	---	3562316C1
2	PLUG	---	---	3562316C2
3	K97C	18	VT	3562314C1
4	K34A	18	TN	3562314C1
5	K97J	18	VT	3562314C1
6	K97-GV	16	WH	3562315C1
7	K97-GW	16	WH	3562315C1
8	K#123 •	18	TN	3562314C1
8	K#141 ••	18	TN	3562314C1
8	K97AU ◎	18	PL	3562314C1
9	PLUG	---	---	3562316C1
10	PLUG	---	---	3562316C1
11	PLUG	---	---	3562316C1
12	K5A+ #	18	YL	3562314C1
12	K5AA+ #	18	YL	3562314C1
13	K5A-	18	GN	3562314C1
13	K5AA-	18	GN	3562314C1
14	K97ACH ##	16	VT	3562315C1
15	PLUG	---	---	3562316C1
16	PLUG	---	---	3562316C1
17	PLUG	---	---	3562316C1
18	PLUG	---	---	3562316C1
19	K97ACG ##	16	VT	3562315C1
20	PLUG	---	---	3562316C1
21	PLUG	---	---	3562316C1
22	PLUG	---	---	3562316C1
23	K17L	18	PK	3562314C1
24	K97CD	18	VT	3562314C1

• 16 ENGINE W/WTEC XMSN; W/WTEC W/RETARDER & V8 ENGINE W/WTEC
•• 16 ENGINE W/LCT GEN IV, W/WTEC GEN IV, W/WTEC GEN IV W/RTDR & V8 ENGINE W/LCT GEN IV & W/WTEC GEN IV
◎ 16 ENGINE W/LCT XMSN & V8 ENGINE W/LCT XMSN
V8 ENGINE W/WTEC
16 ENGINE W/1 GAUGE CHARGING CIRCUIT

CHK	DATE	CHANGE	REV	REFERENCE	DRAWN	NAME
CNA	30AUG06	ADDED CIRCUITS K97ACH AND K97ACG.	B	60540L	GSC2	CONNECTOR COMPOSITES, PB30500, PC30500, RE30030
					RELEASE NO. 56878R	DATE 16JUL03 PART NO. AE08-54925 SHEET 025

Figure 110 Connector Composites (6012), (6012C), (6020)

Connector Composites (6021), (6120), p. 26

INTERNATIONAL TRUCK AND ENGINE CORPORATION

THIS PRINT IS PROVIDED ON A RESTRICTED BASIS AND IS NOT TO BE USED IN ANY WAY DETRIMENTAL TO THE INTEREST OF INTERNATIONAL TRUCK AND ENGINE CORPORATION.

ELECTRICAL CIRCUIT DIAGRAM CHAPTER 10

CONNECTOR BODY COMPOSITES: CONNECTOR BODY COMPOSITES(MATING END VIEW) Continued

ECM2 CONNECTOR
GROUND
(6021)

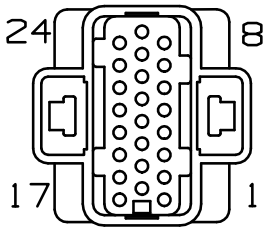

CONNECTOR - 3562312C1

CAV	CIRCUIT	GAUGE	COLOR	TERMINAL
1	K97F	16	VT	3562315C1
2	K97ZA	16	VT	3562315C1
3	PLUG	---	---	3562316C1
4	K97 *	16	VT	3562315C1
4	K97 **	18	VT	3562314C1
5	PLUG	---	---	3562316C1
6	PLUG	---	---	3562316C1
7	PLUG	---	---	3562316C1
8	PLUG	---	---	3562316C1
9	PLUG	---	---	3562316C1
10	K#125 @	18	TN	3562314C1
10	K#125W @@	18	TN	3562314C1
10	K#126W &	18	GY	3562314C1
10	K#157 &&	18	GY	3562314C1
11	PLUG	---	---	3562316C1
12	K99D	18	PL	3562314C1
13	PLUG	---	---	3562316C1
14	K23A	18	TN	3562314C1
15	PLUG	---	---	3562316C1
16	PLUG	---	---	3562316C1
17	PLUG	---	---	3562316C1
18	K99B	16	VT	3562315C1
18	K99B	16	PL	3562315C1
19	PLUG	---	---	3562316C1
20	K3AA+	18	DK BL	3562314C1
21	K3AA-	18	GY	3562314C1
22	PLUG	---	---	3562316C1
23	PLUG	---	---	3562316C1
24	K97D	18	VT	3562314C1

@ W/WTEC GEN IV & W/WTEC GEN IV W/RTDR
@@ I6 & V8 ENGINE W/LCT GEN IV XMSN
& I6 & V8 ENGINE W/LCT XMSN
&& I6 & V8 ENGINE W/WTEC AND W/WTEC RETARDER
* I6 ENGINE W/LCT XMSN & W/LCT GEN IV
** I6 ENGINE N/LCT & N/LCT GEN IV

NOTE: RETARDER IS NOT VALID FOR V8 ENGINES

AMMETER
(6120)

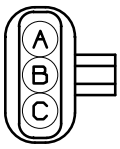

CONNECTOR - 1667740C1
CONNECTOR
BODY LOCK - 1667771C1

CAV	CIRCUIT	GAUGE	COLOR	TERMINAL	SEAL/SLEEVE
A	K26B	18	TN	1667742C1	1661872C1
B	K26-G	16	WH	1667742C1	1661872C1
C	K26	18	TN	1667742C1	1661872C1

AMMETER
(6120)

CONNECTOR - 1667741C1
CONNECTOR
BODY LOCK - 1667771C1

CAV	CIRCUIT	GAUGE	COLOR	TERMINAL	SEAL/SLEEVE
A	K26B	18	TN	1661875C1	1661872C1
B	K26-G	16	WH	1661875C1	1661872C1
C	K26	18	TN	1661875C1	1661872C1

CHK	DATE	CHANGE	REV	REFERENCE	DRAWN	NAME		
CNA	6JAN06	ADDED CLEAN POWER	A	50342E	GSC2	PB30500, PC30500, RE30030		
		AND GEN4 EFFECTS			RELEASE NO. 56878R	DATE 16JUL03	PART NO. AE08-54925	SHEET 26

Figure 111 Connector Composites (6021), (6120)

Connector Composites (6200), (6201), (6202), (6305), (6308), (6309), p. 26A

INTERNATIONAL TRUCK AND ENGINE CORPORATION

THIS PRINT IS PROVIDED ON A RESTRICTED BASIS AND IS NOT TO BE USED IN ANY WAY DETRIMENTAL TO THE INTEREST OF INTERNATIONAL TRUCK AND ENGINE CORPORATION.

ELECTRICAL CIRCUIT DIAGRAM CHAPTER 10

CONNECTOR BODY COMPOSITES: CONNECTOR BODY COMPOSITES(MATING END VIEW) Continued

AC IDLE UP PARK BRAKE SWITCH (6200)

PLATFORM HARNESS

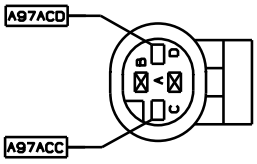

CONNECTOR - 1661777C1
TERMINAL(16AWG) - 1661875C1
MATES W/BRAKE PRESSURE SWITCH

AC IDLE UP ISO DIODE (6201)

PLATFORM HARNESS

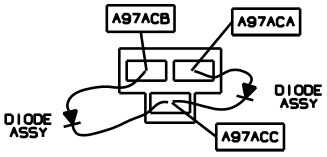

DIODE ASSY - 1659928C1
CONNECTOR - 0598839C1
TERMINAL(16AWG) - 0333733C1

DIODE ASSY IS THE MATING CONNECTOR

AC IDLE UP BODY BUILDER (6202)

PLATFORM HARNESS

CONNECTOR - 1661196C1

CAV	CIRCUIT	GAUGE	COLOR	TERMINAL
A	A97ACA	16	VT	1661209C1
B	A97ACB	16	VT	1661209C1

KEY SWITCH (6305)

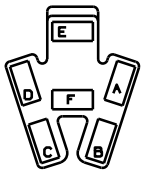

CONNECTOR - 0293347C1

CAV	CIRCUIT	GAUGE	COLOR	TERMINAL
A	V13N	16	PK	0188396R1
B	---	---	---	NA
C	---	---	---	NA
D	---	---	---	NA
E	V14	12	RD	1660577C1
F	V17E	18	PK	0879630R1

STOP SWITCH (6308)

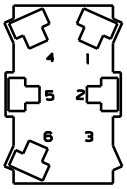

CONNECTOR - 1661256C1

CAV	CIRCUIT	GAUGE	COLOR	TERMINAL
1	---	---	---	NA
2	---	---	---	NA
3	---	---	---	NA
4	V14D	12	RD	1661227C1
5	V14A	12	RD	1661227C1
6	---	---	---	---

IGNITION RELAY (6309)

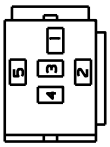

CONNECTOR - 0593385C1
CONNECTOR BODY LOCK - 0593387C1

CAV	CIRCUIT	GAUGE	COLOR	TERMINAL
1	V14D	12	RD	1661710C1
2	V11-G	16	WH	1659673C1
3	---	---	---	NA
4	V13L	14	PK	1661710C1
4	V13P	14	PK	1661710C1
5	V13R	16	PK	1661709C1

CHK	DATE	CHANGE	REV	REFERENCE
CNA	30AUG06	ADDED REF CONNECTORS	A	60540L
	6200, 6201 & 6202.			

DRAWN U00K640 — NAME CONNECTOR COMPOSITES, PB30500, PC30500, RE30030
RELEASE NO. 50342E — DATE 12DEC05 — PART NO. AE08-54925 — SHEET 26A

Figure 112 Connector Composites (6200), (6201), (6202), (6305), (6308), (6309)

Connector Composites (6310), (6311), (6323), p. 27

INTERNATIONAL TRUCK AND ENGINE CORPORATION

THIS PRINT IS PROVIDED ON A RESTRICTED BASIS AND IS NOT TO BE USED IN ANY WAY DETRIMENTAL TO THE INTEREST OF INTERNATIONAL TRUCK AND ENGINE CORPORATION.

ELECTRICAL CIRCUIT DIAGRAM CHAPTER 10

CONNECTOR BODY COMPOSITES: CONNECTOR BODY COMPOSITES(MATING END VIEW) Continued

STARTER ISO AND POWER RELAY (6310)

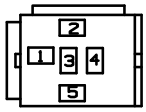

CONNECTOR - 0593385C1
CONNECTOR BODY LOCK - 0593387C1

CAV	CIRCUIT	GAUGE	COLOR	TERMINAL
1	V17D	10	PK	1661710C1
2	V17S	18	PK	1659673C1
3	---	---	---	---
4	V17A	10	PK	1661710C1
5	V17	18	PK	1661709C1
5	V17E	18	PK	1661709C1

DIODE ASSY (6311)

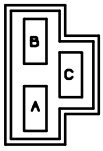

CONNECTOR - 0598839C1

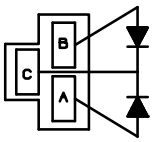

RECT ASSY - 1659928C1

CAV	CIRCUIT	GAUGE	COLOR	TERMINAL
A	V13N	16	PK	0333733C1
B	V13K	16	PK	0333733C1
C	V13R	16	PK	0333733C1

ECM CLEAN POWER & GND (6323)

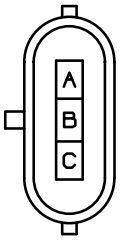

CONNECTOR - 1667732C1
CONNECTOR BODY LOCK - 1667734C1

CAV	CIRCUIT	GAUGE	COLOR	TERMINAL	SEAL/SLEEVE
A	K97X	10	VT	2025425C1	1667735C1
B	K97-G	10	WH	2025425C1	1667735C1
C	K97HA	10	VT	2025425C1	1667735C1

CHK	DATE	CHANGE	REV	REFERENCE	DRAWN	NAME	
CNA	6JAN06	ADDED CLEAN POWER	A	50342E	GSC2	PB30500, PC30500, RE30030	
		AND GEN4 EFFECTS			RELEASE NO. 56878R	DATE 16JUL03	PART NO. AE08-54925 SHEET 27

Figure 113 Connector Composites (6310), (6311), (6323)

Connector Composites (6323F), (6323M), (6331), p. 27A

INTERNATIONAL TRUCK AND ENGINE CORPORATION

THIS PRINT IS PROVIDED ON A RESTRICTED BASIS AND IS NOT TO BE USED IN ANY WAY DETRIMENTAL TO THE INTEREST OF INTERNATIONAL TRUCK AND ENGINE CORPORATION.

ELECTRICAL CIRCUIT DIAGRAM CHAPTER 10

CONNECTOR BODY COMPOSITES: CONNECTOR BODY COMPOSITES(MATING END VIEW) Continued

ECM CLEAN
POWER & GROUND
(6323F)

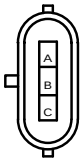

CONNECTOR - 1667732C1
CONNECTOR
BODY LOCK - 1667734C1

CAV	CIRCUIT	GAUGE	COLOR	TERMINAL	SEAL/SLEEVE
A	K97X	10	VT	2025425C1	1667735C1
B	K97-G	10	WH	2025425C1	1667735C1
C	K97HA	10	VT	2025425C1	1667735C1

ENGINE HARN CONN.
BATTERY CONNECTOR
(6323M)

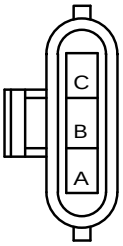

CONNECTOR - 1667733C1
CONNECTOR
BODY LOCK - 1667734C1

CAV	CIRCUIT	GAUGE	COLOR	TERMINAL	SEAL/SLEEVE
A	N97AA	10	VT	1667737C1	1667735C1
B	N97-G	10	WH	1667737C1	1667735C1
C	N97AB	10	VT	1667737C1	1667735C1

BATT PWR/GND CONN
(6331)

WTEC XMSN
HARNESS

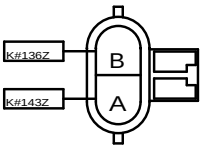

CONNECTOR - 2031520C1
CONN LOCK - 2033927C1
TERMINAL - 2031531C1

CHK	DATE	CHANGE	REV	REFERENCE	DRAWN	NAME		
					U00K640	PB30500, PC30500, RE30030		
					RELEASE NO. 50342E	DATE 12DEC05	PART NO. AF08-54925	SHEET 27A

Figure 114 Connector Composites (6323F), (6323M), (6331)

Connector Composites (6400), (6405), (6406), p. 27B

INTERNATIONAL TRUCK AND ENGINE CORPORATION

THIS PRINT IS PROVIDED ON A RESTRICTED BASIS AND IS NOT TO BE USED IN ANY WAY DETRIMENTAL TO THE INTEREST OF INTERNATIONAL TRUCK AND ENGINE CORPORATION.

ELECTRICAL CIRCUIT DIAGRAM CHAPTER 10

CONNECTOR BODY COMPOSITES: CONNECTOR BODY COMPOSITES(MATING END VIEW) Continued

LOW COOLANT SENSOR (6400)

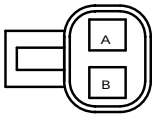

CAV	CIRCUIT	GAUGE	COLOR	TERMINAL	SEAL/SLEEVE
A	K34A	18	TN	2033819C1	1652325C1
B	K34-G	16	WH	2033819C1	1652325C1

CONNECTOR - 1671610C1
CONNECTOR
BODY LOCK - 1671608C1

ENGINE FAN RELAY (6405)

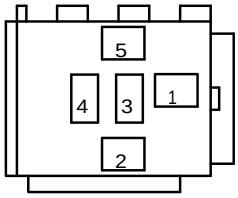

CAV	CIRCUIT	GAUGE	COLOR	TERMINAL
1	V23Y	18	TN	1661709C1
1	V23Z	18	TN	1661709C1
2	V23A	18	TN	1659673C1
3	---	---	---	NA
4	V23	18	TN	1659673C1
5	V23Y	18	TN	1659673C1

CONNECTOR - 0593385C1
CONNECTOR
BODY LOCK - 0593387C1

FAN SOLENOID (6406)

SOLENOID PIGTAIL

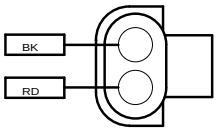

ENGINE HARNESS

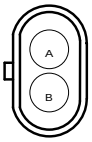

CONNECTOR - 0587567C91

CAV	CIRCUIT	GAUGE	COLOR	TERMINAL	SEAL/SLEEVE
A	K23-G	16	WH	0587577C1	1652325C1
B	K23	18	TN	0587578C1	1652325C1

CHK	DATE	CHANGE	REV	REFERENCE	DRAWN	NAME		
					U00K640	PB30500, PC30500, RE30030		
					RELEASE NO. 50342E	DATE 12DEC05	PART NO. AE08-54925	SHEET 27B

Figure 115 Connector Composites (6400), (6405), (6406)

Connector Composites (6702), (6703), (6704), p. 28

INTERNATIONAL TRUCK AND ENGINE CORPORATION

THIS PRINT IS PROVIDED ON A RESTRICTED BASIS AND IS NOT TO BE USED IN ANY WAY DETRIMENTAL TO THE INTEREST OF INTERNATIONAL TRUCK AND ENGINE CORPORATION.

ELECTRICAL CIRCUIT DIAGRAM CHAPTER 10

CONNECTOR BODY COMPOSITES: CONNECTOR BODY COMPOSITES(MATING END VIEW) Continued

BAP SENSOR
(6702)

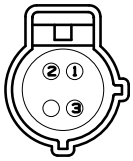

CONNECTOR - 2016703C1
CONNECTOR BODY LOCK - 2056704C1

CAV	CIRCUIT	GAUGE	COLOR	TERMINAL
1	V97Z	18	VT	2003343C1
2	V97BL	18	VT	2003343C1
3	V97CD	18	VT	2003343C1
4	---	---	---	---

AIR INTAKE TEMP
(6703)

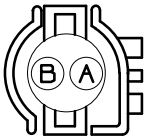

CONNECTOR - 1689462C1
CONNECTOR BODY LOCK - 1689463C1

CAV	CIRCUIT	GAUGE	COLOR	TERMINAL
A	K97B	16	VT	1689464C1
B	K97S	16	VT	1689464C1

FUEL FILTER
(6704)

CONNECTOR - 3562853C1

CAV	CIRCUIT	GAUGE	COLOR	TERMINAL	SEAL/SLEEVE
1	K19A	16	GY	3561584C1	3536868C1
2	K19C	16	GY	3561584C1	3536868C1

CHK	DATE	CHANGE	REV	REFERENCE	DRAWN	NAME		
CNA	6JAN06	ADDED CLEAN POWER	A	50342E	GSC2	PB30500, PC30500, RE30030		
		AND GEN4 EFFECTS			RELEASE NO. 56878R	DATE 16JUL03	PART NO. AE08-54925	SHEET 28

Figure 116 Connector Composites (6702), (6703), (6704)

Connector Composites (6705), (6706), (6708), (6741), p. 28A

INTERNATIONAL TRUCK AND ENGINE CORPORATION

THIS PRINT IS PROVIDED ON A RESTRICTED BASIS AND IS NOT TO BE USED IN ANY WAY DETRIMENTAL TO THE INTEREST OF INTERNATIONAL TRUCK AND ENGINE CORPORATION.

ELECTRICAL CIRCUIT DIAGRAM CHAPTER 10

CONNECTOR BODY COMPOSITES: CONNECTOR BODY COMPOSITES(MATING END VIEW) Continued

AIR DRYER
(6705)

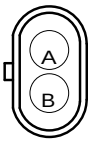

CONNECTOR - 0587567C91

CAV	CIRCUIT	GAUGE	COLOR	TERMINAL	SEAL/SLEEVE
A	K39B	16	GY	0587577C1	1652325C1
B	K39-G	16	WH	0587577C1	1652325C1
B	K39-GA *	16	WH	0587577C1	1652325C1

* V8 ENGINE W/LCT & W/LCT GEN IV

FUEL FILTER
PREHEATER
(6706)

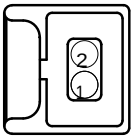

CONNECTOR - 1689462C1

FUEL FILTER
PREHEATER
(6708)

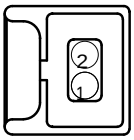

CONNECTOR - 3578645C1

CAV	CIRCUIT	GAUGE	COLOR	TERMINAL	SEAL/SLEEVE
1	K19A	14	GY	3559035C1	3575783C1
2	K19-GZ	14	WH	3559035C1	3575783C1

XMSN OIL
TEMP SENSOR
(6741)

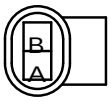

CONNECTOR - 2036584C1

CAV	CIRCUIT	GAUGE	COLOR	TERMINAL
A	K31A	18	TN	2036586C1
B	K31-G	18	WH	2036586C1

CHK	DATE	CHANGE	REV	REFERENCE	DRAWN	NAME		
					U00K640	PB30500, PC30500, RE30030		
					RELEASE NO. 50342E	DATE 12DEC05	PART NO. AE08-54925	SHEET 28A

Figure 117 Connector Composites (6705), (6706), (6708), (6741)

Connector Composites (7100F), (7100M), p. 29

INTERNATIONAL TRUCK AND ENGINE CORPORATION

THIS PRINT IS PROVIDED ON A RESTRICTED BASIS AND IS NOT TO BE USED IN ANY WAY DETRIMENTAL TO THE INTEREST OF INTERNATIONAL TRUCK AND ENGINE CORPORATION.

ELECTRICAL CIRCUIT DIAGRAM CHAPTER 10

CONNECTOR BODY COMPOSITES: CONNECTOR BODY COMPOSITES(MATING END VIEW) Continued

CONTROL BOX
XMSN
(7100F)

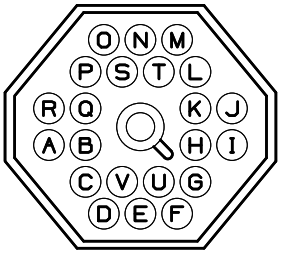

CONNECTOR - 0598332C1
CONNECTOR BODY LOCK - 0598333C1

● V8 ENGINE W/WTEC XMSN
●● V8 ENGINE W/LCT GEN IV
(I6 AND V8 ENGINE) W/LCT GEN IV
N/V8 ENGINE & WTEC XMSN
& N/V8 ENGINE & LCT GEN IV
&& N/I6 AND V8 ENGINE LCT GEN IV
* I6 GEN IV W/RETARDER

CAV	CIRCUIT	GAUGE	COLOR	TERMINAL	SEAL/SLEEVE
A	K#113 ●	18	WH	0587578C1	3517771C1
A	K#165 ##	18	TN	0587578C1	3517771C1
B	K71A &	16	OR	0587577C1	1652325C1
B	K71A ●●	18	OR	0587578C1	3517771C1
C	K71 &&	16	OR	0587577C1	1652325C1
C	K71 #	18	OR	0587578C1	3517771C1
D	PLUG	---	---	0587579C1	N/A
E	PLUG	---	---	0587579C1	N/A
F	PLUG	---	---	0587579C1	N/A
G	K#142 ●	18	WH	0587578C1	3517771C1
H	K#151 ●	18	DK BL	0587578C1	3517771C1
I	PLUG	---	---	0587579C1	N/A
J	K#163A #	16	YL	0587577C1	1652325C1
J	K#163A &	18	YL	0587578C1	3517771C1
K	K70C ●,*	18	OR	0587578C1	3517771C1
L	K92H ●,*	18	GY	0587578C1	3517771C1
M	PLUG	---	---	0587579C1	N/A
N	PLUG	---	---	0587579C1	N/A
O	PLUG	---	---	0587579C1	N/A
P	PLUG	---	---	0587579C1	N/A
Q	K#124A *	18	WH	0587578C1	3517771C1
Q	K#124A *	18	WH	0587578C1	1652325C1
Q	K#125A ●	18	WH	0587578C1	3517771C1
R	PLUG	---	---	0587579C1	N/A
S	PLUG	---	---	0587579C1	N/A
T	PLUG	---	---	0587579C1	N/A
U	K#146B ●	18	YL	0587578C1	3517771C1
V	PLUG	---	---	0587579C1	N/A

CONTROL BOX
GROUND
(7100M)

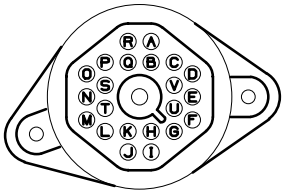

CONNECTOR - 0593389C1

● W/WTEC XMSN & W/WTEC & RETARDER
●● W/GEN IV & (W/WTEC GEN IV & RETARDER)
W/WTEC XMSN
W/WTEC GEN IV & RETARDER

CAV	CIRCUIT	GAUGE	COLOR	TERMINAL	SEAL/SLEEVE
A	V113	18	WH	0587576C1	1652325C1
A	V165	18	TN	0587576C1	1652325C1
B	V71A	16	OR	0587575C1	1652325C1
C	V71	16	OR	0587575C1	1652325C1
D	PLUG	---	---	0587579C1	N/A
E	PLUG	---	---	0587579C1	N/A
F	PLUG	---	---	0587579C1	N/A
G	K#142 ●	18	WH	0587576C1	1652325C1
H	K#151 ●	18	LT BL	0587576C1	1652325C1
I	PLUG	---	---	0587579C1	N/A
J	V163A ●●	18	YL	0587576C1	1652325C1
K	V70C ●●	14	OR	0587575C1	0589391C1
L	V92H ●●	16	TN	0587575C1	1652325C1
M	PLUG	---	---	0587579C1	N/A
N	PLUG	---	---	0587579C1	N/A
O	PLUG	---	---	0587579C1	N/A
P	PLUG	---	---	0587579C1	N/A
Q	V124A ##	18	WH	0587576C1	1652325C1
Q	V125A #	18	WH	0587576C1	1652325C1
R	PLUG	---	---	0587579C1	N/A
S	PLUG	---	---	0587579C1	N/A
T	PLUG	---	---	0587579C1	N/A
U	V146A ●	18	YL	0587576C1	1652325C1
V	PLUG	---	---	0587579C1	N/A

CHK	DATE	CHANGE	REV	REFERENCE	DRAWN	NAME
CNA	6JAN06	ADDED CLEAN POWER AND GEN4 EFFECTS	A	50342E	GSC2	PB30500, PC30500, RE30030
					RELEASE NO. 56878R	DATE 16JUL03 · PART NO. AE08-54925 · SHEET 29

Figure 118 Connector Composites (7100F), (7100M)

Connector Composites (7101F), (7101M), p. 29A

INTERNATIONAL TRUCK AND ENGINE CORPORATION

THIS PRINT IS PROVIDED ON A RESTRICTED BASIS AND IS NOT TO BE USED IN ANY WAY DETRIMENTAL TO THE INTEREST OF INTERNATIONAL TRUCK AND ENGINE CORPORATION.

ELECTRICAL CIRCUIT DIAGRAM CHAPTER 10

CONNECTOR BODY COMPOSITES: CONNECTOR BODY COMPOSITES(MATING END VIEW) Continued

CONTROL BOX XMSN
(7101F)

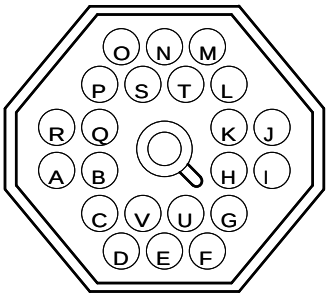

CONNECTOR - 0598332C1
CONNECTOR
BODY LOCK - 0598333C1

@ I6 ENGINE W/WTEC, W/WTEC & RETARDER
* (I6 & V8 ENGINE) W/LCT XMSN

CAV	CIRCUIT	GAUGE	COLOR	TERMINAL	SEAL/SLEEVE
A	K#113 @	18	WH	0587578C1	3517771C1
B	K71A @	16	OR	0587577C1	1652325C1
C	K71 @	16	OR	0587577C1	1652325C1
D	K97P *	18	GY	0587578C1	3517771C1
E	PLUG	---	---	0587579C1	N/A
F	PLUG	---	---	0587579C1	N/A
G	K#142 @	18	WH	0587578C1	3517771C1
H	K#151 @	18	DK BL	0587578C1	3517771C1
I	PLUG	---	---	0587579C1	N/A
J	K13T *	16	PK	0587577C1	1652325C1
K	K70C @	18	OR	0587578C1	3517771C1
L	K92H @	18	GY	0587578C1	3517771C1
M	PLUG	---	---	0587579C1	N/A
N	PLUG	---	---	0587579C1	N/A
O	PLUG	---	---	0587579C1	N/A
P	PLUG	---	---	0587579C1	N/A
Q	K#125A @	18	WH	0587578C1	1652325C1
R	PLUG	---	---	0587579C1	N/A
S	PLUG	---	---	0587579C1	N/A
T	PLUG	---	---	0587579C1	N/A
U	K#146A @	18	YL	0587578C1	3517771C1
V	PLUG	---	---	0587579C1	N/A

XMSN HORN CONNECTOR
(7101M)

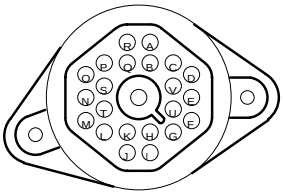

CONNECTOR - 0593389C1

*W/LCT XMSN

CAV	CIRCUIT	GAUGE	COLOR	TERMINAL	SEAL/SLEEVE
A	PLUG	---	---	0587579C1	N/A
B	PLUG	---	---	0587579C1	N/A
C	PLUG	---	---	0587579C1	N/A
D	V97P	16	VT	0587575C1	1652325C1
E	PLUG	---	---	0587579C1	N/A
F	PLUG	---	---	0587579C1	N/A
G	PLUG	---	---	0587579C1	N/A
H	PLUG	---	---	0587579C1	N/A
I	PLUG	---	---	0587579C1	N/A
J	V13T	16	PK	0587575C1	1652325C1
K	PLUG	---	---	0587579C1	N/A
L	PLUG	---	---	0587579C1	N/A
M	PLUG	---	---	0587579C1	N/A
N	PLUG	---	---	0587579C1	N/A
O	PLUG	---	---	0587579C1	N/A
P	PLUG	---	---	0587579C1	N/A
O	PLUG	---	---	0587579C1	N/A
R	PLUG	---	---	0587579C1	N/A
S	PLUG	---	---	0587579C1	N/A
T	PLUG	---	---	0587579C1	N/A
U	PLUG	---	---	0587579C1	N/A
V	PLUG	---	---	0587579C1	N/A

CHK	DATE	CHANGE	REV	REFERENCE	DRAWN	NAME		
					U00K640	PB30500, PC30500, RE30030		
					RELEASE NO. 50342E	DATE 12DEC05	PART NO. AE08-54925	SHEET 29A

Figure 119 Connector Composites (7101F), (7101M)

Connector Composites (7104F), (7104M), (7105), (7106), p. 29B

INTERNATIONAL TRUCK AND ENGINE CORPORATION

THIS PRINT IS PROVIDED ON A RESTRICTED BASIS AND IS NOT TO BE USED IN ANY WAY DETRIMENTAL TO THE INTEREST OF INTERNATIONAL TRUCK AND ENGINE CORPORATION.

ELECTRICAL CIRCUIT DIAGRAM CHAPTER 10

CONNECTOR BODY COMPOSITES: CONNECTOR BODY COMPOSITES(MATING END VIEW) Continued

XMSN CLEAN POWER & GROUND
(7104F)

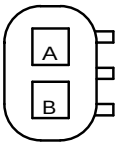

CONNECTOR - 1671611C1
CONNECTOR
BODY LOCK - 1671608C1

CAV	CIRCUIT	GAUGE	COLOR	TERMINAL	SEAL/SLEEVE
A	K#103A *	10	PK	1687848C1	0589390C1
A	K#136Y **	10	PK	1687848C1	0589390C1
A	K92 &	18	TN	2033911C1	3517771C1
A	K92 ##	10	TN	1687848C1	0589390C1
A	K92A *	10	TN	1687848C1	0589390C1
B	K92-G	10	WH	1687848C1	0589390C1

I6 ENGINE W/WTEC GEN IV AND V8 ENGINE W/WTEC
GEN IV AND I6 ENGINE W/WTEC GEN IV W/RTDR
& I6 W/WTEC W/RETARDER
# (I6 & V8 ENIGNE) W/LCT GEN IV
* (I6 & V8 ENGINE) W/LCT XMSN
** (I6 & V8 ENGINE) W/WTEC XMSN, W/WTEC AND W/RTDR

TRANSMISSION POWER
(7104M)

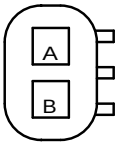

CONNECTOR - 1671610C1
CONNECTOR
BODY LOCK - 1671608C1

CAV	CIRCUIT	GAUGE	COLOR	TERMINAL	SEAL/SLEEVE
A	N92A	10	TN	1687847C1	0589390C1
B	N92-G	10	WH	1687847C1	0589390C1

J1707(-) J1708(-)
(7105)

CONTROL BOX HARNESS

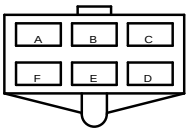

CONNECTOR - 0892136C1

CAV	CIRCUIT	GAUGE	COLOR	TERMINAL
A	V3-	14	BK	0188396R1
B	V3A-	18	BK	0879630R1
C	K#151	18	LT BL	0879630R1
D	---	---	---	---
E	---	---	---	---
F	---	---	---	---

J1707(+) J1707(+)
(7106)

CONTROL BOX HARNESS

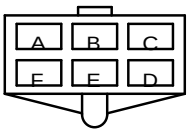

CONNECTOR - 0892136C1

CAV	CIRCUIT	GAUGE	COLOR	TERMINAL
A	V3+	14	BK	0188396R1
B	V3A+	18	BK	0879630R1
C	K#142	18	WH	0879630R1
D	---	---	---	---
E	---	---	---	---
F	---	---	---	---

CHK	DATE	CHANGE	REV	REFERENCE	DRAWN	NAME		
					U00K640	PB30500, PC30500, RE30030		
					RELEASE NO. 50342E	DATE 12DEC05	PART NO. AF08-54925	SHEET 29B

Figure 120 Connector Composites (7104F), (7104M), (7105), (7106)

Connector Composite (7150), p. 29C

INTERNATIONAL TRUCK AND ENGINE CORPORATION

THIS PRINT IS PROVIDED ON A RESTRICTED BASIS AND IS NOT TO BE USED IN ANY WAY DETRIMENTAL TO THE INTEREST OF INTERNATIONAL TRUCK AND ENGINE CORPORATION.

ELECTRICAL CIRCUIT DIAGRAM CHAPTER 10

CONNECTOR BODY COMPOSITES: CONNECTOR BODY COMPOSITES(MATING END VIEW) Continued

ALLISON TRANSMISSION
TCM CONNECTOR
(7150)

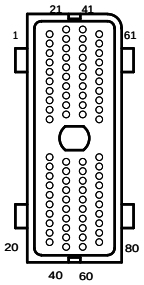

CONNECTOR - 3605713C1
CONNECTOR
BODY LOCK - 3606525C1

CAV	CIRCUIT	GAUGE	COLOR	TERMINAL
1	K#101 @	18	DK BL	3606047C1
2	K#102	18	YL	3606047C1
3	K#103	18	YL	3606047C1
4	---	---	---	---
5	K#105 @	18	OR	3606047C1
6	---	---	---	---
7	---	---	---	---
8	K5C-	18	GN	3606047C1
9	K#109	18	GY	3606047C1
10	K#110	18	PK	3606047C1
11	K#111	18	OR	3606047C1
12	K#112 @	18	PK	3606047C1
13	---	---	---	---
14	K#114 ##	18	GY	3606047C1
15	K#115 **	18	WH	3606047C1
16	K#116 @	18	DK BL	3606047C1
17	K#117	18	DK BL	3606047C1
18	---	---	---	---
19	K#119 **	18	DK BL	3606047C1
20	K#120	18	DK BL	3606047C1
21	K#121	18	LT GN	3606047C1
22	---	---	---	---
23	K#123 ##	18	LT GN	3606047C1
24	K#124	18	WH	3606047C1
25	K#125	18	TN	3606047C1
26	---	---	---	---
27	---	---	---	---
28	K5C+	18	YL	3606047C1
29	K#129	18	LT GN	3606047C1
30	K#130 @	18	WH	3606047C1
31	K#131	18	YL	3606047C1
32	---	---	---	---
33	K#133	18	YL	3606047C1
34	K#134 @	18	OR	3606047C1
34	K#134	18	WH	3606047C1
35	---	---	---	---
36	K#136	18	OR	3606047C1
37	K#137 @	18	WH	3606047C1
38	K#138 ##	18	OR	3606047C1
39	K#139	18	OR	3606047C1
40	K#140	18	LT GN	3606047C1
41	K#141	18	TN	3606047C1
42	K#142	18	WH	3606047C1
43	K#143	18	DK BL	3606047C1
44	---	---	---	---
45	K#145	18	OR	3606047C1
46	---	---	---	---
47	---	---	---	---
48	---	---	---	---
49	---	---	---	---
50	K#150 ##	18	PK	3606047C1
51	K#151	18	WH	3606047C1
52	K#152	18	LT GN	3606047C1
53	K#153 ##	18	YL	3606047C1
54	K#154	18	TN	3606047C1
55	K#155	18	WH	3606047C1
56	K#156 **	18	YL	3606047C1
57	K#157	18	WH	3606047C1
58	K#158	18	LT GN	3606047C1
59	K#159	18	TN	3606047C1
60	K#160	18	YL	3606047C1
61	K#161 @	18	OR	3606047C1
62	K#162	18	YL	3606047C1
63	K#163	18	YL	3606047C1
64	K#164 @	18	DK BL	3606047C1
65	K#165	18	TN	3606047C1
66	---	---	---	---
67	---	---	---	---
68	---	---	---	---
69	K#169	18	GY	3606047C1
70	K#170	18	PK	3606047C1
71	K#171	18	YL	3606047C1
72	---	---	---	---
73	K#173	18	DK BL	3606047C1
74	K#174	18	DK BL	3606047C1
75	K#175 **	18	OR	3606047C1
76	K#176	18	YL	3606047C1
77	K#177	18	LT GN	3606047C1
78	K#178	18	WH	3606047C1
79	K#179 ##	18	PK	3606047C1
80	K#180 ##	18	OR	3606047C1

@ (I6 & V8 ENGINE) LCT XMSN
W/(I6 & V8 ENGINE) W/LCT GEN IV XMSN
* N/V8 ENGINE
** I6 ENGINE W/WTEC GEN IV W/RETARDER & W/WTEC W/RETARDER

CHK	DATE	CHANGE	REV	REFERENCE	DRAWN	NAME		
					U00K640	PB30500, PC30500, RE30030		
					RELEASE NO. 50342E	DATE 12DEC05	PART NO. AE08-54925	SHEET 29C

Figure 121 Connector Composite (7150)

Connector Composites (7200), (7202), p. 30

INTERNATIONAL TRUCK AND ENGINE CORPORATION

THIS PRINT IS PROVIDED ON A RESTRICTED BASIS AND IS NOT TO BE USED IN ANY WAY DETRIMENTAL TO THE INTEREST OF INTERNATIONAL TRUCK AND ENGINE CORPORATION.

ELECTRICAL CIRCUIT DIAGRAM CHAPTER 10

CONNECTOR BODY COMPOSITES: CONNECTOR BODY COMPOSITES(MATING END VIEW) Continued

XMSN BULKHEAD (7200)

ENGINE HARNESS

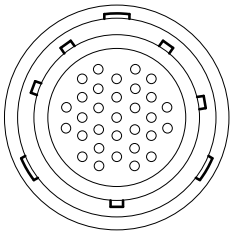

*W/WTEC III XMSN RETARDER

CONNECTOR - 3508926C1

CAV	CIRCUIT	GAUGE	COLOR	TERMINAL
A	K#102	18	OR	3508927C1
B	K#103	18	LT GN	3508927C1
C	K#104	18	WH	3508927C1
D	K#124A	18	PK	3508927C1
E	K#107	18	LT GN	3508927C1
F	K#110	18	WH	3508927C1
G	K#120	18	WH	3508927C1
H	K#121	18	TN	3508927C1
J	K#128	18	OR	3508927C1
K	K#129	18	TN	3508927C1
L	K#130	18	YL	3508927C1
M	K#131	18	DK BL	3508927C1
M	K#131	18	LT BL	3508927C1
N	K#135A	18	LT GN	3508927C1
N	K#135B	18	LT GN	3508927C1
P	K#147	18	TN	3508927C1
R	PLUG	---	---	3508928C1
S	PLUG	---	---	3508928C1
T	PLUG	---	---	3508928C1
U	K#140	18	DK BL	3508927C1
V	K#149	18	OR	3508927C1
W	K#195	18	TN	3508927C1
X	K#162	18	WH	3508927C1
Y	K#165	18	DK BL	3508927C1
Z	PLUG	---	---	3508928C1
a	PLUG	---	---	3508928C1
b	PLUG	---	---	3508928C1
c	PLUG	---	---	3508928C1
d	PLUG	---	---	3508928C1
e	PLUG	---	---	3508928C1
f	PLUG	---	---	3508928C1
g	PLUG	---	---	3508928C1

ECU "V" CONNECTOR (7202)

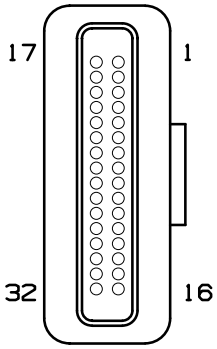

CONNECTOR -3517239C1

CAV	CIRCUIT	GAUGE	COLOR	TERMINAL
A	K#102	18	OR	3508927C1
B	K#103	18	LT GN	3508927C1
C	K#104	18	WH	3508927C1
D	K#124A	18	PK	3508927C1
E	K#107	18	LT GN	3508927C1
F	K#110	18	WH	3508927C1
G	K#120	18	WH	3508927C1
H	K#121	18	TN	3508927C1
J	K#128	18	OR	3508927C1
K	K#129	18	TN	3508927C1
L	K#130	18	YL	3508927C1
M	K#131	18	DK BL	3508927C1
M	K#131	18	LT BL	3508927C1
N	K#135A	18	LT GN	3508927C1
N	K#135B	18	LT GN	3508927C1
P	K#147	18	TN	3508927C1
R	PLUG	---	---	3508928C1
S	PLUG	---	---	3508928C1
T	PLUG	---	---	3508928C1
U	K#140	18	DK BL	3508927C1
V	K#149	18	OR	3508927C1
W	K#195	18	TN	3508927C1
X	K#162	18	WH	3508927C1
Y	K#165	18	DK BL	3508927C1
Z	PLUG	---	---	3508928C1
a	PLUG	---	---	3508928C1
b	PLUG	---	---	3508928C1
c	PLUG	---	---	3508928C1
d	PLUG	---	---	3508928C1
e	PLUG	---	---	3508928C1
f	PLUG	---	---	3508928C1
g	PLUG	---	---	3508928C1

* V8/ENGINE W/WTEC

CHK	DATE	CHANGE	REV	REFERENCE	DRAWN	NAME		
CNA	6JAN06	ADDED CLEAN POWER	A	50342E	GSC2	PB30500, PC30500, RE30030		
		EFFECTS			RELEASE NO. 56878R	DATE 15JUL03	PART NO. AE08-54925	SHEET 30

Figure 122 Connector Composites (7200), (7202)

Connector Composites (7203), (7204), p. 30A

INTERNATIONAL TRUCK AND ENGINE CORPORATION

THIS PRINT IS PROVIDED ON A RESTRICTED BASIS AND IS NOT TO BE USED IN ANY WAY DETRIMENTAL TO THE INTEREST OF INTERNATIONAL TRUCK AND ENGINE CORPORATION.

ELECTRICAL CIRCUIT DIAGRAM CHAPTER 10

CONNECTOR BODY COMPOSITES: CONNECTOR BODY COMPOSITES(MATING END VIEW) Continued

ECU "T" CONNECTOR (7203)

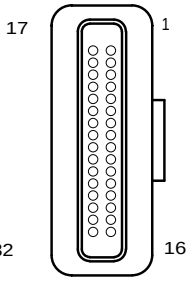

CONNECTOR-3517241C1

**W/WTEC III XMSN RETARDER

CAV	CIRCUIT	GAUGE	COLOR	TERMINAL
1	K#102	18	OR	3517243C1
2	K#121	18	TN	3517243C1
3	K#107	18	LT GN	3517243C1
4	K#120	18	WH	3517243C1
5	K#103	18	LT GN	3517243C1
6	K#129	18	TN	3517243C1
7	K#104	18	WH	3517243C1
8	PLUG	---	---	3518314C1
9	K#124A	18	PK	3517243C1
10	PLUG	---	---	3518314C1
11	PLUG	---	---	3518314C1
12	K#162	18	WH	3517243C1
13	K#195	18	YL	3517243C1
13	K#195	18	TN	3517243C1
14	K#141	18	TN	3517243C1
15	K#149	18	OR	3517243C1
16	K#139	18	YL	3517243C1
17	K#130	18	YL	3517243C1
18	PLUG	---	---	3518314C1
19	K#116 *	18	YL	3517243C1
20	K#128	18	OR	3517243C1
21	K#131	18	DK BL	3517243C1
21	K#131	18	LT BL	3517243C1
22	K#110	18	WH	3517243C1
23	K#127 *	18	WH	3517243C1
24	K#101 *	18	DK BL	3517243C1
25	K#135A	18	LT GN	3517243C1
26	K#165	18	DK BL	3517243C1
27	K#147	18	TN	3517243C1
28	K#138 *	18	OR	3517243C1
29	PLUG	---	---	3518314C1
30	K#150	18	OR	3517243C1
31	K#140	18	DK BL	3517243C1
32	K#148	18	LT GN	3517243C1

* - N/V8 WTEC XMSN

ECU "S" CONNECTOR (7204)

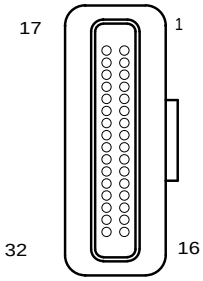

CONNECTOR-3517237C1

**W/WTEC III XMSN RETARDER

CAV	CIRCUIT	GAUGE	COLOR	TERMINAL
1	K#142	18	WH	3517243C1
2	PLUG	---	---	3518314C1
3	K#124	18	PK	3517243C1
4	K#146A	18	YL	3517243C1
5	K#170	18	OR	3517243C1
6	K#171	18	LT GN	3517243C1
7	K#172	18	LT BL	3517243C1
7	K#172	18	DK BL	3517243C1
8	K#173	18	YL	3517243C1
9	K#174	18	TN	3517243C1
10	K#175	18	LT GN	3517243C1
11	K#119	18	YL	3517243C1
12	PLUG	---	---	3518314C1
13	K5C+	18	YL	3517243C1
13	K5CC+	18	YL	3517243C1
14	K#180	18	DK BL	3517243C1
15	[HOSE]	18	BK	3517243C1
16	K#136A	18	PK	3517243C1
17	K#151	18	DK BL	3517243C1
18	PLUG	---	---	3518314C1
19	K#135	18	LT GN	3517243C1
20	K#164	18	YL	3517243C1
21	PLUG	---	---	3518314C1
22	PLUG	---	---	3518314C1
23	PLUG	---	---	3518314C1
24	PLUG	---	---	3518314C1
25	PLUG	---	---	3518314C1
26	K#169	18	DK BL	3517243C1
27	K#163	18	DK BL	3517243C1
28	PLUG	---	---	3518314C1
29	K5C-	18	GN	3517243C1
29	K5CC-	18	GN	3517243C1
30	K#157	18	GY	3517243C1
31	K#115	18	LT GN	3517243C1
32	K#143A	18	GY	3517243C1

* - I6 & V8 ENGINE W/LCT XMSN

CHK	DATE	CHANGE	REV	REFERENCE	DRAWN	NAME		
					U00K640	PB30500, PC30500, RE30030		
					RELEASE NO. 50342E	DATE 12DEC05	PART NO. AE08-54925	SHEET 30A

Figure 123 Connector Composites (7203), (7204)

Connector Composites (7250), (7300), p. 31

INTERNATIONAL TRUCK AND ENGINE CORPORATION

THIS PRINT IS PROVIDED ON A RESTRICTED BASIS AND IS NOT TO BE USED IN ANY WAY DETRIMENTAL TO THE INTEREST OF INTERNATIONAL TRUCK AND ENGINE CORPORATION.

ELECTRICAL CIRCUIT DIAGRAM CHAPTER 10

CONNECTOR BODY COMPOSITES: CONNECTOR BODY COMPOSITES(MATING END VIEW) Continued

XMSN BULKHEAD
(7250)

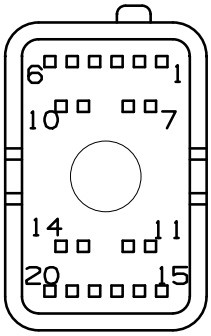

CONNECTOR - 3605715C1
CONNECTOR BODY LOCK - 3606532C1

CAV	CIRCUIT	GAUGE	COLOR	TERMINAL
1	K#111	18	OR	3606047C1
2	K#155	18	WH	3606047C1
3	K#177	18	LT GN	3606047C1
4	K#136	18	OR	3606047C1
5	K#152	18	LT GN	3606047C1
6	K#171	18	YL	3606047C1
7	---	---	---	---
8	K#174	18	DK BL	3606047C1
9	K#133	18	YL	3606047C1
10	K#151	18	WH	3606047C1
11	K#131	18	YL	3606047C1
11	K#131C	18	YL	3606047C1
12	K#137	18	WH	3606047C1
13	K#180	18	OR	3606047C1
14	K#120	18	DK BL	3606047C1
15	K#116	18	DK BL	3606047C1
16	K#112	18	PK	3606047C1
16	K#112A	18	PK	3606047C1
17	---	---	---	---
18	K#154	18	TN	3606047C1
19	K#158	18	LT GN	3606047C1
19	K#158B	18	LT GN	3606047C1
20	K#176	18	YL	3606047C1

CONDUIT CLIP
(7300)

(LOCATED ON REAR OF XMSN)

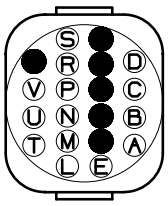

CONNECTOR - 3522537C91
CONNECTOR BODY LOCK - 3518287C1

CAV	CIRCUIT	GAUGE	COLOR	TERMINAL
A	K#226	18	LT GN	3517243C1
B	K#227	18	LT BL	3517243C1
C	K#231	18	TN	3517243C1
D	K#201	18	LT BL	3517243C1
E	K#203	18	WH	3517243C1
F	K#202	18	PK	3517243C1
G	K#210	18	TN	3517243C1
H	K#220A	18	LT GN	3517243C1
J	K#229	18	WH	3517243C1
K	K#204	18	LT GN	3517243C1
L	K#222	18	YL	3517243C1
M	K#223	18	WH	3517243C1
N	K#224	18	PK	3517243C1
P	K#225	18	OR	3517243C1
R	K#230	18	LT BL	3517243C1
S	K#232	18	LT GN	3517243C1
T	K#221	18	YL	3517243C1
U	PLUG	---	---	3518314C1
V	PLUG	---	---	3518314C1
W	K#228	18	GY	3517243C1

NOTE:- I6 & V8 ENGINE W/LCT XMSN

CHK	DATE	CHANGE	REV	REFERENCE	DRAWN	NAME		
CNA	6JAN06	ADDED CLEAN POWER	A	50342E	GSC2	PB30500, PC30500, RE30030		
		AND GEN4 EFFECTS			RELEASE NO. 56878R	DATE 14JUL03	PART NO. AE08-54925	SHEET 31

Figure 124 Connector Composites (7250), (7300)

Connector Composite (7303), p. 31A

INTERNATIONAL TRUCK AND ENGINE CORPORATION

THIS PRINT IS PROVIDED ON A RESTRICTED BASIS AND IS NOT TO BE USED IN ANY WAY DETRIMENTAL TO THE INTEREST OF INTERNATIONAL TRUCK AND ENGINE CORPORATION.

ELECTRICAL CIRCUIT DIAGRAM CHAPTER 10

CONNECTOR BODY COMPOSITES: CONNECTOR BODY COMPOSITES(MATING END VIEW) Continued

NSBU SWITCH
(7303)

(LOCATED ON XMSN HARNESS)

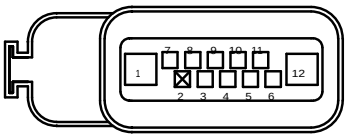

CONNECTOR - 3589739C1
CONNECTOR
BODY LOCK- 3589823C1

CAV	CIRCUIT	GAUGE	COLOR	TERMINAL	SEAL/SLEEVE
1	K97AU	18	PL	3534162C1	3535427C1
2	PLUG	---	---	3535425C1	N/A
3	PLUG	---	---	3535425C1	N/A
4	K#206	18	YL	3535303C1	3535424C1
5	K#205	18	LT BL	3535303C1	3535424C1
6	K#207	18	GY	3535303C1	3535424C1
7	K#220B	18	TN	3535303C1	3535424C1
8	K#208	18	WH	3535303C1	3535424C1
9	PLUG	---	---	3535425C1	N/A
10	K71A	16	OR	3535303C1	3535424C1
11	K71	16	OR	3535303C1	3535424C1
12	K97P	18	GY	3534162C1	3535427C1

* I6 & V8 ENGINE W/LCT XMSN

CHK	DATE	CHANGE	REV	REFERENCE	DRAWN	NAME		
					UOOK640	PB30500, PC30500, RE30030		
					RELEASE NO. 50342E	DATE 12DEC05	PART NO. AE08-54925	SHEET 31A

Figure 125 Connector Composite (7303)

Connector Composite (7304), p. 32

INTERNATIONAL TRUCK AND ENGINE CORPORATION

THIS PRINT IS PROVIDED ON A RESTRICTED BASIS AND IS NOT TO BE USED IN ANY WAY DETRIMENTAL TO THE INTEREST OF INTERNATIONAL TRUCK AND ENGINE CORPORATION.

ELECTRICAL CIRCUIT DIAGRAM CHAPTER 10

CONNECTOR BODY COMPOSITES: CONNECTOR BODY COMPOSITES(MATING END VIEW) Continued

TCM RED XMSN
(7304)

(LOCATED AT REAR OF RIGHT FRAME RAIL)

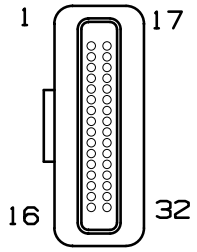

CONNECTOR - 3541172C91

CAV	CIRCUIT	GAUGE	COLOR	TERMINAL
1	K#201	18	LT BL	3517243C1
2	K#202	18	PK	3517243C1
3	K#203	18	WH	3517243C1
4	K#204	18	LT GN	3517243C1
5	K#205	18	LT BL	3517243C1
6	K#206	18	YL	3517243C1
7	K#207	18	GY	3517243C1
8	K#208	18	WH	3517243C1
9	PLUG	---	---	3518314C1
10	K#210	18	TN	3517243C1
11	PLUG	---	---	3518314C1
12	PLUG	---	---	3518314C1
13	K#213	18	OR	3517243C1
14	K#214	18	LT BL	3517243C1
15	K#215	18	YL	3517243C1
16	K#216	18	LT GN	3517243C1
17	K#217	18	TN	3517243C1
18	K#218	18	OR	3517243C1
19	PLUG	---	---	3518314C1
20	K#220	18	LT GN	3517243C1
21	K#221	18	YL	3517243C1
22	K#222	18	YL	3517243C1
23	K#223	18	WH	3517243C1
24	K#224	18	PK	3517243C1
25	K#225	18	OR	3517243C1
26	K#226	18	LT GN	3517243C1
27	K#227	18	LT BL	3517243C1
28	K#228	18	GY	3517243C1
29	K#229	18	WH	3517243C1
30	K#230	18	LT BL	3517243C1

CHK	DATE	CHANGE	REV	REFERENCE	DRAWN	NAME		
CNA	6JAN06	ADDED CLEAN POWER	A	50342E	GSC2	PB30500, PC30500, RE30030		
		EFFECTS			RELEASE NO. 56878R	DATE 15JUL03	PART NO. AE08-54925	SHEET 32

Figure 126 Connector Composite (7304)

Connector Composite (7305), p. 32A

INTERNATIONAL TRUCK AND ENGINE CORPORATION

THIS PRINT IS PROVIDED ON A RESTRICTED BASIS AND IS NOT TO BE USED IN ANY WAY DETRIMENTAL TO THE INTEREST OF INTERNATIONAL TRUCK AND ENGINE CORPORATION.

ELECTRICAL CIRCUIT DIAGRAM CHAPTER 10

CONNECTOR BODY COMPOSITES: CONNECTOR BODY COMPOSITES(MATING END VIEW) Continued

TCM GRAY VEHICLE
(7305)

(LOCATED AT REAR OF RIGHT FRAME RAIL)

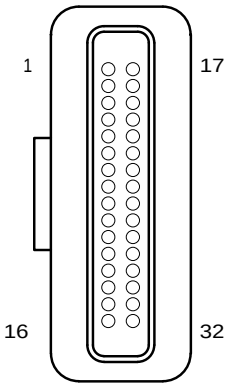

CONNECTOR - 3541171C91

CAV	CIRCUIT	GAUGE	COLOR	TERMINAL
1	K#101	18	GY	3517243C1
2	K#102	18	YL	3517243C1
3	K#103	18	PK	3517243C1
4	K#104	18	YL	3517243C1
5	K#105	18	GY	3517243C1
6	K#106	18	LT BL	3517243C1
7	PLUG	---	---	3518314C1
8	K#108	18	LT GN	3517243C1
9	PLUG	---	---	3518314C1
10	K#110	18	YL	3517243C1
11	K#111	18	LT GN	3517243C1
12	PLUG	---	---	3518314C1
13	K#113	18	PK	3517243C1
14	PLUG	---	---	3518314C1
15	PLUG	---	---	3518314C1
16	[HOSE]	18	BK	3517243C1
17	PLUG	---	---	3518314C1
18	PLUG	---	---	3518314C1
19	K#119	18	TN	3517243C1
20	PLUG	---	---	3518314C1
21	K#121	18	WH	3517243C1
22	PLUG	---	---	3518314C1
23	K#123	18	PK	3517243C1
24	PLUG	---	---	3518314C1
25	K#125	18	LT GN	3517243C1
26	K#126	18	TN	3517243C1
27	PLUG	---	---	3518314C1
28	K#128	18	YL	3517243C1
29	K5C+	18	YL	3517243C1
30	PLUG	---	---	3518314C1
31	PLUG	---	---	3518314C1
32	K5C-	18	GN	3517243C1

I6 & V8 ENGINE W/LCT XMSN

CHK	DATE	CHANGE	REV	REFERENCE	DRAWN	NAME		
					U00K640	PB30500, PC30500, RE30030		
					RELEASE NO. 50342E	DATE 12DEC05	PART NO. AE08-54925	SHEET 32A

Figure 127 Connector Composite (7305)

Connector Composites (7306), (7350), p. 32B

INTERNATIONAL TRUCK AND ENGINE CORPORATION

THIS PRINT IS PROVIDED ON A RESTRICTED BASIS AND IS NOT TO BE USED IN ANY WAY DETRIMENTAL TO THE INTEREST OF INTERNATIONAL TRUCK AND ENGINE CORPORATION.

ELECTRICAL CIRCUIT DIAGRAM CHAPTER 10

CONNECTOR BODY COMPOSITES: CONNECTOR BODY

CHASSIS OVERLAY CONNECTOR
W/LCT XMSN (7306)

PLATFORM OVERLAY HARNESS
(7306M)

CAV	AIR (7306M)	HYD (7603M)
A	A110	A110
B	A123	A123
C	A125	A125
D	A128D	A128E
E	PLUG	A113
F	PLUG	PLUG
G	PLUG	PLUG
H	PLUG	PLUG

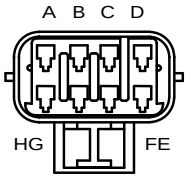

CONNECTOR - 3525872C1
TERMINAL - 1661875C1
CABLE SEAL - 1661872C1
SEALING PLUG - 2025431C1

CHASSIS OVERLAY HARNESS
(7306F)

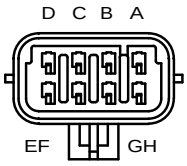

CAV	AIR (7306F)	HYD (7603F)
A	N110	N110
B	N123	N123
C	N125	N125
D	N128D	N128E
E	PLUG	N113
F	PLUG	PLUG
G	PLUG	PLUG
H	PLUG	PLUG

CONNECTOR - 3525874C1
TERMINAL - 1667742C1
CABLE SEAL - 1661872C1
SEALING PLUG - 2025431C1

XMSN BULKHEAD
(7350)

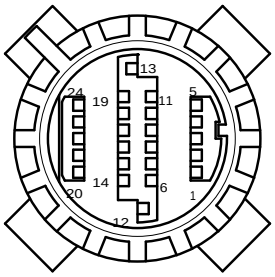

CONNECTOR - 3605714C1

CAV	CIRCUIT	GAUGE	COLOR	TERMINAL
1	K#152	18	LT GN	3606047C1
2	K#133	18	YL	3606047C1
3	K#151	18	WH	3606047C1
4	K#117	18	DK BL	3606047C1
5	PLUG	---	---	3606526C1
6	K#157	18	WH	3606047C1
7	K#179	18	PK	3606047C1
8	K#154	18	TN	3606047C1
9	K#158	18	LT GN	3606047C1
10	K#178	18	WH	3606047C1
11	K#177	18	LT GN	3606047C1
12	PLUG	---	---	3606526C1
13	PLUG	---	---	3606526C1
14	K#111	18	OR	3606047C1
15	K#155	18	WH	3606047C1
16	K#171	18	YL	3606047C1
17	K#136	18	OR	3606047C1
18	K#138	18	OR	3606047C1
19	K#174	18	DK BL	3606047C1
20	K#114	18	GY	3606047C1
21	K#153	18	YL	3606047C1
22	K#173	18	DK BL	3606047C1
23	K#134	18	WH	3606047C1
24	K#176	18	YL	3606047C1

* I6 & V8 ENGINE W/LCT GEN IV XMSN

CHK	DATE	CHANGE	REV	REFERENCE	DRAWN	NAME		
					U00K640	PB30500, PC30500, RE30030		
					RELEASE NO.	DATE	PART NO.	SHEET
					50342E	12DEC05	AF08-54925	32B

Figure 128 Connector Composites (7306), (7350)

Connector Composites (7505), (7600), (7603), p. 33

INTERNATIONAL TRUCK AND ENGINE CORPORATION

THIS PRINT IS PROVIDED ON A RESTRICTED BASIS AND IS NOT TO BE USED IN ANY WAY DETRIMENTAL TO THE INTEREST OF INTERNATIONAL TRUCK AND ENGINE CORPORATION.

ELECTRICAL CIRCUIT DIAGRAM CHAPTER 10

CONNECTOR BODY COMPOSITES: CONNECTOR BODY COMPOSITES(MATING END VIEW) Continued

BACKUP RELAY
(7505)

(LOCATED ON CONTROL BOX)

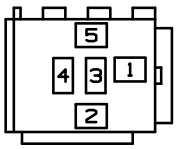

CONNECTOR - 0593385C1
CONNECTOR BODY LOCK - 0593387C1

CAV	CIRCUIT	GAUGE	COLOR	TERMINAL
1	V71	16	OR	1661709C1
2	V113 **	18	WH	1659673C1
2	V165 *	18	TN	1659673C1
3	---	---	---	---
4	V71A	16	OR	1661709C1
5	V146E **	16	OR	1661709C1
5	V163E *	18	YL	1659673C1

* W/WTEC GEN IV W/RETARDER AND GEN IV
** W/WTEC XMSN AND W/WTEC XMSN W/RETARDER

OUTPUT SPEED SENSOR
(7600)

(LOCATED ON XMSN)

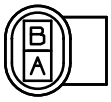

CONNECTOR - 2036583C1

CAV	CIRCUIT	GAUGE	COLOR	TERMINAL
A	K#215	18	YL	2036586C1
B	K#216	18	LT GN	2036586C1

* (I6 & V8 ENGINE) W/LCT XMSN AND W/LCT GEN IV XMSN

OUTPUT SPEED SENSOR
(7600)

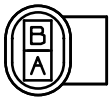

CONNECTOR - 3610533C1
CONNECTOR BODY LOCK - 3610532C1

CAV	CIRCUIT	GAUGE	COLOR	TERMINAL	SEAL/SLEEVE
A	K#160	18	YL	3554322C1	3554318C1
B	K#140	18	LT GN	3554322C1	3554318C1

ENGINE SPEED SENSOR
(7603)

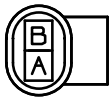

CONNECTOR - 2036583C1

CAV	CIRCUIT	GAUGE	COLOR	TERMINAL
A	K#141	18	TN	2036586C1
B	K#150	18	OR	2036586C1

CHK	DATE	CHANGE	REV	REFERENCE	DRAWN	NAME	
CNA	6JAN06	ADDED CLEAN POWER	A	50342E	GSC2	PB30500, PC30500, RE30030	
		AND GEN4 EFFECTS			RELEASE NO. 56878R	DATE 15JUL03	PART NO. AE08-54925 SHEET 33

Figure 129 Connector Composites (7505), (7600), (7603)

Connector Composites (7603), (7604), (7605), (7607), p. 33A

INTERNATIONAL TRUCK AND ENGINE CORPORATION

THIS PRINT IS PROVIDED ON A RESTRICTED BASIS AND IS NOT TO BE USED IN ANY WAY DETRIMENTAL TO THE INTEREST OF INTERNATIONAL TRUCK AND ENGINE CORPORATION.

ELECTRICAL CIRCUIT DIAGRAM CHAPTER 10

CONNECTOR BODY COMPOSITES: CONNECTOR BODY COMPOSITES(MATING END VIEW) Continued

ENGINE SPEED SENSOR
(7603)

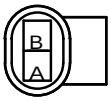

CONNECTOR - 3610533C1
CONNECTOR
BODY LOCK - 3610532C1

CAV	CIRCUIT	GAUGE	COLOR	TERMINAL	SEAL/SLEEVE
A	K#159	18	TN	3554322C1	3554318C1
B	K#139	18	OR	3554322C1	3554318C1

ENGINE SPEED SENSOR
(7604)

(LOCATED ON XMSN)

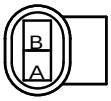

CONNECTOR - 2036583C1

CAV	CIRCUIT	GAUGE	COLOR	TERMINAL
A	K#217	18	TN	2036586C1
B	K#218	18	OR	2036586C1

I6 & V8 ENGINE W/LCT XMSN
AND W/LCT GEN IV XMSN

ENGINE SPEED SENSOR
(7604)

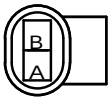

CONNECTOR - 3610533C1
CONNECTOR
BODY LOCK - 3610532C1

CAV	CIRCUIT	GAUGE	COLOR	TERMINAL	SEAL/SLEEVE
A	K#159	18	TN	3554322C1	3554318C1
B	K#139	18	OR	3554322C1	3554318C1

OUTPUT SPEED SENSOR
(7605)

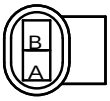

CONNECTOR - 2036583C1

CAV	CIRCUIT	GAUGE	COLOR	TERMINAL
A	K#139	18	YL	2036586C1
B	K#148	18	LT GN	2036586C1

V8 ENGINE W/WTEC XMSN

TURBINE SPEED SENSOR
(7607)

(LOCATED ON XMSN)

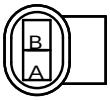

CONNECTOR - 2036583C1

CAV	CIRCUIT	GAUGE	COLOR	TERMINAL
A	K#213	18	OR	2036586C1
B	K#214	18	LT BL	2036586C1

I6 & V8 ENGINE W/LCT XMSN
AND W/LCT GEN IV XMSN

TURBINE SPEED SENSOR
(7607)

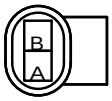

CONNECTOR - 3610533C1
CONNECTOR
BODY LOCK - 3610532C1

CAV	CIRCUIT	GAUGE	COLOR	TERMINAL	SEAL/SLEEVE
A	K#180	18	OR	3554322C1	3554318C1
B	K#120	18	DK BL	3554322C1	3554318C1

CHK	DATE	CHANGE	REV	REFERENCE	DRAWN	NAME		
					U00K640	PB30500, PC30500, RE30030		
					RELEASE NO. 50342E	DATE 12DEC05	PART NO. AE08-54925	SHEET 33A

Figure 130 Connector Composites (7603), (7604), (7605), (7607)

Connector Composites (7806), (7807), p. 33B

INTERNATIONAL TRUCK AND ENGINE CORPORATION

THIS PRINT IS PROVIDED ON A RESTRICTED BASIS AND IS NOT TO BE USED IN ANY WAY DETRIMENTAL TO THE INTEREST OF INTERNATIONAL TRUCK AND ENGINE CORPORATION.

ELECTRICAL CIRCUIT DIAGRAM CHAPTER 10

CONNECTOR BODY COMPOSITES: CONNECTOR BODY COMPOSITES(MATING END VIEW) Continued

RETARDER ON/OFF WARNING LIGHT
(7806)

(LOCATED ON
CONTROL BOX)

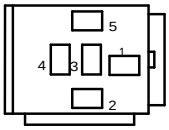

CONNECTOR - 0593385C1
CONNECTOR
BODY LOCK - 0593387C1

CAV	CIRCUIT	GAUGE	COLOR	TERMINAL
1	V70	14	OR	1661709C1
2	V92J	16	TN	1661709C1
3	---	---	---	---
4	V70C	14	OR	2018946C1
5	V70-GA	16	WH	2018946C1

W/WTEC XMSN AND W/WTEC GEN IV W/RETARDER

RETARDER ON/OFF
WARNING LIGHT
(7807)

(LOCATED ON CONTROL BOX)

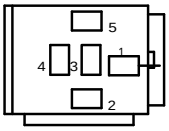

CONNECTOR - 0593385C1
CONNECTOR
BODY LOCK - 0593387C1

CAV	CIRCUIT	GAUGE	COLOR	TERMINAL
1	V146B	18	YL	1661709C1
1	V163D	18	YL	1661709C1
2	V146B	18	YL	1659673C1
2	V163B	18	YL	1659673C1
3	V92H	16	TN	1661710C1
3	V92J	16	TN	1661710C1
4	---	---	---	---
5	V124A	18	WH	1659673C1
5	V125A	18	WH	1659673C1

W/WTEC XMSN AND W/WTEC GEN IV W/RETARDER

CHK	DATE	CHANGE	REV	REFERENCE	DRAWN	NAME		
					U00K640	PB30500, PC30500, RE30030		
					RELEASE NO.	DATE	PART NO.	SHEET
					50342E	12DEC05	AE08-54925	33B

Figure 131 Connector Composites (7806), (7807)

Connector Composites (7808), (7966), p. 34

INTERNATIONAL TRUCK AND ENGINE CORPORATION

THIS PRINT IS PROVIDED ON A RESTRICTED BASIS AND IS NOT TO BE USED IN ANY WAY DETRIMENTAL TO THE INTEREST OF INTERNATIONAL TRUCK AND ENGINE CORPORATION.

ELECTRICAL CIRCUIT DIAGRAM CHAPTER 10

CONNECTOR BODY COMPOSITES: CONNECTOR BODY COMPOSITES(MATING END VIEW) Continued

RETARDER
SOLENOID
(7808)

(LOCATED ON XMSN)

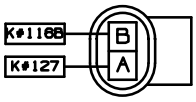

CONNECTOR - 2036584C1
TERMINAL - 2036586C1

BODY I/O
CONNECTOR
(7966)

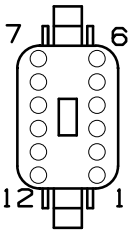

CONNECTOR - 3601923C1
CONNECTOR
BODY LOCK - 3601925C1

* W/LCT & WTEC GEN IV
** W/TEC GEN IV W/RETARDER
@ W/LCT XMSN

CAV	CIRCUIT	GAUGE	COLOR	TERMINAL
1	K#103A *,**	18	YL	1680205C1
1	K#128A @	18	YL	1680205C1
2	PLUG	---	---	0453133C1
3	K#106	18	LT BL	1680205C1
3	K#143	18	DK BL	1680205C1
4	K#119	18	TN	1680205C1
4	K#150	18	PK	1680205C1
5	K#125A	18	TN	1680205C1
5	K#126A	18	TN	1680205C1
6	K#101	18	DK BL	1680205C1
6	K#111	18	LT GN	1680205C1
7	K#108	18	LT GN	1680205C1
7	K#123	18	LT GN	1680205C1
8	K#121	18	WH	1680205C1
8	K#145	18	OR	1680205C1
9	PLUG	---	---	0453133C1
10	PLUG	---	---	0453133C1
11	K#162	18	YL	1680205C1
12	PLUG	---	---	0453133C1

CHK	DATE	CHANGE	REV	REFERENCE	DRAWN	NAME		
CNA	6JAN06	ADDED CLEAN POWER	A	50342E	GS2	PB30500, PC30500, RE30030		
		AND GEN4 EFFECTS			RELEASE NO. 56878R	DATE 15JUL03	PART NO. AE08-54925	SHEET 34

Figure 132 Connector Composites (7808), (7966)

Connector Composite (7966), p. 34A

INTERNATIONAL TRUCK AND ENGINE CORPORATION

THIS PRINT IS PROVIDED ON A RESTRICTED BASIS AND IS NOT TO BE USED IN ANY WAY DETRIMENTAL TO THE INTEREST OF INTERNATIONAL TRUCK AND ENGINE CORPORATION.

ELECTRICAL CIRCUIT DIAGRAM CHAPTER 10

CONNECTOR BODY COMPOSITES: CONNECTOR BODY COMPOSITES(MATING END VIEW) Continued

BODY BUILDER I/O CONNECTOR (7966)

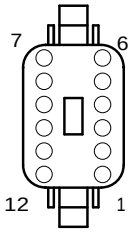

CONNECTOR - 3601924C1
CONNECTOR
BODY LOCK - 3601925C1

CAV	CIRCUIT	GAUGE	COLOR	TERMINAL
1	K#103A &&	18	YL	3572625C1
1	K#103A ***	18	YL	1680205C1
1	K#128A @	18	YL	1680205C1
1	K#161A @@,&	18	YL	1680205C1
2	K#101 **,%%	18	DK BL	1680205C1
2	K#155 @@,&	18	LT GN	1680205C1
3	K#106 @	18	LT BL	1680205C1
3	K#117 @@,&	18	LT GN	1680205C1
3	K#117 %%,**	18	DK BL	1680205C1
3	K#143 &&	18	DK BL	3572625C1
4	K#119 @	18	TN	1680205C1
4	K#150 $$	18	PK	1680205C1
4	K#150 $	18	PK	1680205C1
5	K#118 @@&	18	DK BL	1680205C1
5	K#126A &&	18	GY	1680205C2
5	K#126A $$$	18	TN	1680205C2
5	K#125A &&,$	18	TN	1680205C1
5	K#125A	18	TN	3572625C1
5	K#126A $$	18	TN	1680205C1
5	K#143 ***	18	DK BL	1680205C1
6	K#101 &&	18	DK BL	3572625C1
6	K#101$	18	DKBL	1680205C1
6	K#111 @	18	LT GN	1680205C1
6	K#142 **%%	18	WH	1680205C1
6	K#153 @@&	18	YL	1680205C1
7	K#108 @	18	LT GN	1680205C1
7	K#123 $	18	LT GN	3572625C1
8	K#105 **%%	18	OR	1680205C1
8	K#121 @	18	WH	1680205C1
8	K#145 &&	18	OR	3572625C1
8	K#145 $	18	OR	1680205C1
8	K#167 &,@@	18	WH	1680205C1
9	K#114 &,@@	18	WH	1680205C1
9	K#145 **%%	18	OR	1680205C1
10	PLUG	---	---	0453133C1
11	K#162 &&	18	YL	3572625C1
11	K#162 # #	18	YL	1680205C1
12	K#112 &,@@	18	TN	1680205C1

* W/LCT & WTEC GEN IV
** W/WTEC GEN IV W/RETARDER
@ W/LCT XMSN
@@ W/WTEC XMSN
%% I6&V8 W/WTEC GEN IV
% N/LCT XMSN
□ I6 & V8 LCT GEN IV
& W/WTEC W/RETARDER
&& I6 ENGINE W/LCT GEN IV

CHK	DATE	CHANGE	REV	REFERENCE	DRAWN	NAME		
					UOOK640	PB30500, PC30500, RE30030		
					RELEASE NO. 50342E	DATE 12DEC05	PART NO. AE08-54925	SHEET 34A

Figure 133 Connector Composite (7966)

Connector Composites (7980), (7981), (7982), (7983), p. 34B

INTERNATIONAL TRUCK AND ENGINE CORPORATION

THIS PRINT IS PROVIDED ON A RESTRICTED BASIS AND IS NOT TO BE USED IN ANY WAY DETRIMENTAL TO THE INTEREST OF INTERNATIONAL TRUCK AND ENGINE CORPORATION.

ELECTRICAL CIRCUIT DIAGRAM CHAPTER 10

CONNECTOR BODY COMPOSITES: CONNECTOR BODY COMPOSITES(MATING END VIEW) Continued

RETARDER SOLENOID
(7980)

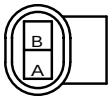

CONNECTOR - 2036584C1

CAV	CIRCUIT	GAUGE	COLOR	TERMINAL
A	K#115	18	WH	2036586C1
A	K#127	18	WH	2036586C1
B	K#116B	18	YL	2036586C1
B	K#131B	18	YL	2036586C1

ACCUMULATOR
SOLENOID
(7981)

(LOCATED ON XMSN)

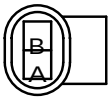

CONNECTOR - 3524378C1

CAV	CIRCUIT	GAUGE	COLOR	TERMINAL
A	K#101	18	DK BL	2036586C1
A	K#119	18	DK BL	2036586C1
B	K#116A	18	YL	2036586C1
B	K#131A	18	YL	2036586C1

RETARDER
TEMP SENSOR
(7982)

(LOCATED ON XMSN)

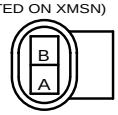

CONNECTOR - 3524377C1

CAV	CIRCUIT	GAUGE	COLOR	TERMINAL
A	K#138	18	OR	2036586C1
A	K#175	18	OR	2036586C1
B	K#135C	18	LT GN	2036586C1
B	K#158C	18	LT GN	2036586C1

OUTPUT SPEED SENSOR
(7983)

(LOCATED ON XMSN)

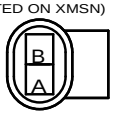

CONNECTOR - 2036583C1

CAV	CIRCUIT	GAUGE	COLOR	TERMINAL
A	K#139	18	YL	2036586C1
B	K#148	18	LT GN	2036586C1

OUTPUT SPEED SENSOR
(7983)

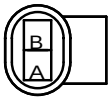

CONNECTOR - 3610533C1
CONNECTOR
BODY LOCK - 3610533C1

CAV	CIRCUIT	GAUGE	COLOR	TERMINAL	SEAL/SLEEVE
A	K#160	18	YL	3554322C1	3554318C1
B	K#140	18	LT GN	3554322C1	3554318C1

CHK	DATE	CHANGE	REV	REFERENCE	DRAWN	NAME		
					U00K640	PB30500, PC30500, RE30030		
					RELEASE NO. 50342E	DATE 12DEC05	PART NO. AE08-54925	SHEET 34B

Figure 134 Connector Composites (7980), (7981), (7982), (7983)

Connector Composites (7999), (9254), (9255), p. 35

INTERNATIONAL TRUCK AND ENGINE CORPORATION

THIS PRINT IS PROVIDED ON A RESTRICTED BASIS AND IS NOT TO BE USED IN ANY WAY DETRIMENTAL TO THE INTEREST OF INTERNATIONAL TRUCK AND ENGINE CORPORATION.

ELECTRICAL CIRCUIT DIAGRAM CHAPTER 10

CONNECTOR BODY COMPOSITES: CONNECTOR BODY COMPOSITES(MATING END VIEW) Continued

BODY BUILDER CONNECTOR
(LOCATED AT CONTROL BOX)
ENGINE HARNESS
(7999)

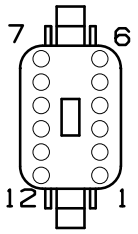

CONNECTOR - 3601923C1
CONNECTOR BODY LOCK - 3601925C1

CIRCUIT	GAUGE	COLOR	TERMINAL
K#103B *,**	18	YL	1680205C1
K#161B %,%%	18	YL	1680205C1
K#161 *	18	OR	1680205C1
K#161B $	18	OR	1680205C1
K#163 %	18	DK BL	1680205C1
K#163B $$	18	DK BL	1680205C1
K#157 *,**	18	WH	1680205C1
K#169 %,%%	18	DK BL	1680205C1
K#124 *	18	WH	1680205C1
K#124B $	18	WH	1680205C1
K#125B %,%%	18	WH	1680205C1
PLUG	---	---	0453133C1
PLUG	---	---	0453133C1
K#102 *,**	18	YL	1680205C1
K#119 %,%%	18	YL	1680205C1
K#121B *,**	18	LT GN	1680205C1
K#154B %,%%	18	WH	1680205C1
K#105A %,%%	18	LT GN	1680205C1
K#164 *	18	DK BL	1680205C1
K#164A $	18	DK BL	1680205C1
PLUG	---	---	0453133C1
PLUG	---	---	0453133C1
K#137 %,%%	18	OR	1680205C1

* W/WTE GENIV
** W/WTEC GENIV AND W/RETARDER
% W/WTEC XMSN
%% W/WTEC XMSN W/RETARDER
□ I6 ENGINE W/WTEC GEN IV AND W/RETARDER
$ I6 ENGINE W/WTEC AND W/RETARDER

IDM FUSE HOLDER
(9254)

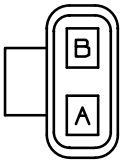

CONNECTOR - 3512967C1

CAV	CIRCUIT	GAUGE	COLOR	TERMINAL
A	N14AY	10	RD	1661708C1
B	N97BA	10	VT	1661708C1

TCM FUSE HOLDER
(9255)

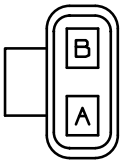

CONNECTOR - 3512967C1

CAV	CIRCUIT	GAUGE	COLOR	TERMINAL
A	N14AZ	10	RD	1661708C1
B	N92B	10	TN	1661708C1

CHK	DATE	CHANGE	REV	REFERENCE	DRAWN	NAME	
CNA	6JAN06	ADDED CLEAN POWER	A	50342E	GSC2	PB30500, PC30500, RE30030	
		AND GEN4 EFFECTS			RELEASE NO. 56878R	DATE 15JUL03	PART NO. AE08-54925 SHEET 35

Figure 135 Connector Composites (7999), (9254), (9255)

Connector Composites (9258), (9260F), (9260M), p. 35A

INTERNATIONAL TRUCK AND ENGINE CORPORATION

THIS PRINT IS PROVIDED ON A RESTRICTED BASIS AND IS NOT TO BE USED IN ANY WAY DETRIMENTAL TO THE INTEREST OF INTERNATIONAL TRUCK AND ENGINE CORPORATION.

ELECTRICAL CIRCUIT DIAGRAM CHAPTER 10

CONNECTOR BODY COMPOSITES: CONNECTOR BODY COMPOSITES(MATING END VIEW) Continued

ECM FUSE HOLDER
(9258)

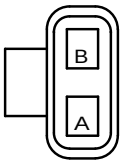

CONNECTOR - 3512967C1

CAV	CIRCUIT	GAUGE	COLOR	TERMINAL
A	N14BD	10	RD	1661708C1
B	N97BC	10	VT	1661708C1

ECM NEGATIVE CONNECTOR
(9260F)

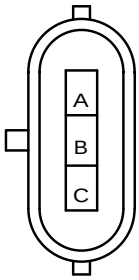

CONNECTOR - 1667732C1
CONNECTOR
BODY LOCK - 1667734C1

CAV	CIRCUIT	GAUGE	COLOR	TERMINAL	SEAL/SLEEVE
A	PLUG	---	---	1675451C1	N/A
B	N92-GA	10	WH	2025425C1	1667735C1
C	N97-G	10	WH	2025425C1	1667735C1

NEGATIVE BATTERY CONNECTOR
(9260M)

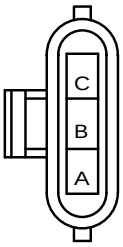

CONNECTOR - 1667733C1
CONNECTOR
BODY LOCK - 1667734C1

CAV	CIRCUIT	GAUGE	COLOR	TERMINAL	SEAL/SLEEVE
A	PLUG	---	---	1675451C1	N/A
B	N92-G	10	WH	1667737C1	1667735C1
C	N97-G	10	WH	1667737C1	1667735C1

CHK	DATE	CHANGE	REV	REFERENCE	DRAWN	NAME		
					U00K640	PB30500, PC30500, RE30030		
					RELEASE NO. 50342E	DATE 12DEC05	PART NO. AF08-54925	SHEET 35A

Figure 136 Connector Composites (9258), (9260F), (9260M)

Connector Composites (9261F), (9261M), (9500), p. 35B

INTERNATIONAL TRUCK AND ENGINE CORPORATION

THIS PRINT IS PROVIDED ON A RESTRICTED BASIS AND IS NOT TO BE USED IN ANY WAY DETRIMENTAL TO THE INTEREST OF INTERNATIONAL TRUCK AND ENGINE CORPORATION.

ELECTRICAL CIRCUIT DIAGRAM CHAPTER 10

CONNECTOR BODY COMPOSITES: CONNECTOR BODY COMPOSITES(MATING END VIEW) Continued

POSITIVE BATTERY CONNECTOR
(9261F)

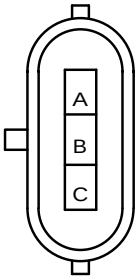

CAV	CIRCUIT	GAUGE	COLOR	TERMINAL	SEAL/SLEEVE
A	N97AA	10	VT	2025425C1	1667735C1
B	N92A	10	TN	2025425C1	1667735C1
C	N97AB	10	VT	2025425C1	1667735C1

CONNECTOR - 1667732C1
CONNECTOR
BODY LOCK - 1667734C1

ECM POSITIVE CONNECTOR
(9261M)

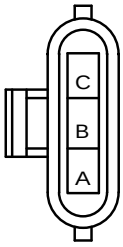

CAV	CIRCUIT	GAUGE	COLOR	TERMINAL	SEAL/SLEEVE
A	N97BA	10	VT	1667737C1	1667735C1
B	N92B	10	TN	1667737C1	1667735C1
C	N97BC	10	VT	1667737C1	1667735C1

CONNECTOR - 1667733C1
CONNECTOR
BODY LOCK - 1667734C1

LEFT REAR SENSOR
(9500)

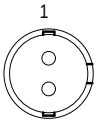

WHEELSPD1

CAV	CIRCUIT	GAUGE	COLOR	TERMINAL
1	[N94LR+]	18	GY	ASSY
2	[N94LR-]	18	OR	ASSY

W/HYDRAULIC BRAKES

CHK	DATE	CHANGE	REV	REFERENCE	DRAWN	NAME		
					U00K640	PB30500, PC30500, RE30030		
					RELEASE NO. 50342E	DATE 12DEC05	PART NO. AE08-54925	SHEET 35B

Figure 137 Connector Composites (9261F), (9261M), (9500)

Connector Composites (9501), (9502), (9503), p. 35C

INTERNATIONAL TRUCK AND ENGINE CORPORATION

THIS PRINT IS PROVIDED ON A RESTRICTED BASIS AND IS NOT TO BE USED IN ANY WAY DETRIMENTAL TO THE INTEREST OF INTERNATIONAL TRUCK AND ENGINE CORPORATION.

ELECTRICAL CIRCUIT DIAGRAM CHAPTER 10

CONNECTOR BODY COMPOSITES: CONNECTOR BODY COMPOSITES(MATING END VIEW) Continued

LEFT FRONT SENSOR
(9501)

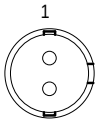

WHEELSPD1

CAV	CIRCUIT	GAUGE	COLOR	TERMINAL
1	[N94LF+]	18	GY	ASSY
2	[N94LF-]	18	OR	ASSY

W/HYDRAULIC BRAKES

RIGHT REAR SENSOR
(9502)

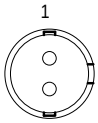

WHEELSPD1

CAV	CIRCUIT	GAUGE	COLOR	TERMINAL
1	[N94RR+]	18	DK BL	ASSY
2	---	---	---	---

W/HYDRAULIC BRAKES

REAR RIGHT SENSOR
(9503)

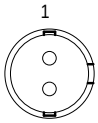

WHEELSPD1

CAV	CIRCUIT	GAUGE	COLOR	TERMINAL
1	[N94RF+]	18	DK BL	ASSY
2	[N94RF-]	18	YL	ASSY

W/HYDRAULIC BRAKES

CHK	DATE	CHANGE	REV	REFERENCE	DRAWN	NAME		
					U00K640	PB30500, PC30500, RE30030		
					RELEASE NO. 50342E	DATE 12DEC05	PART NO. AF08-54925	SHEET 35C

Figure 138 Connector Composites (9501), (9502), (9503)

Connector Composites (9504), (9505), (9506), p. 35D

INTERNATIONAL TRUCK AND ENGINE CORPORATION

THIS PRINT IS PROVIDED ON A RESTRICTED BASIS AND IS NOT TO BE USED IN ANY WAY DETRIMENTAL TO THE INTEREST OF INTERNATIONAL TRUCK AND ENGINE CORPORATION.

ELECTRICAL CIRCUIT DIAGRAM CHAPTER 10

CONNECTOR BODY COMPOSITES: CONNECTOR BODY COMPOSITES(MATING END VIEW) Continued

TRAVEL SENSOR (9504)

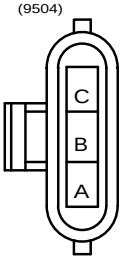

CAV	CIRCUIT	GAUGE	COLOR	TERMINAL	SEAL/SLEEVE
A	N90W	16	GY	1661875C1	1661872C1
B	N90F-G	16	WH	1661875C1	1661872C1
C	N90U	18	GY	1661875C1	3568570C1

CONNECTOR - 1667741C1
CONNECTOR BODY LOCK - 1667771C1

W/HYDRAULIC BRAKES

CUT OFF SOLENOID (9505)

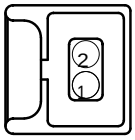

CAV	CIRCUIT	GAUGE	COLOR	TERMINAL	SEAL/SLEEVE
1	N44C	18	GY	3509874C1	3532128C1
2	N90G-G	18	WH	3509874C1	3509903C1

CONNECTOR - 3578645C1

W/HYDRAULIC BRAKES

SUPPLY VALVE (9506)

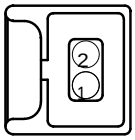

CAV	CIRCUIT	GAUGE	COLOR	TERMINAL	SEAL/SLEEVE
1	N44J	18	GY	3509874C1	3532128C1
2	N44-G	18	WH	3509874C1	3509903C1

CONNECTOR - 3578645C1

W/HYDRAULIC BRAKES

CHK	DATE	CHANGE	REV	REFERENCE	DRAWN	NAME		
					U00K640	PB30500, PC30500, RE30030		
					RELEASE NO. 50342E	DATE 12DEC05	PART NO. AE08-54925	SHEET 35D

Figure 139 Connector Composites (9504), (9505), (9506)

Connector Composites (9507), (9508), p. 35E

INTERNATIONAL TRUCK AND ENGINE CORPORATION

THIS PRINT IS PROVIDED ON A RESTRICTED BASIS AND IS NOT TO BE USED IN ANY WAY DETRIMENTAL TO THE INTEREST OF INTERNATIONAL TRUCK AND ENGINE CORPORATION.

ELECTRICAL CIRCUIT DIAGRAM CHAPTER 10

CONNECTOR BODY COMPOSITES: CONNECTOR BODY COMPOSITES(MATING END VIEW) Continued

FULL POWER MOTOR FEED
(9507)

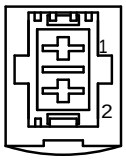

CONNECTOR - 3573656C1

CAV	CIRCUIT	GAUGE	COLOR	TERMINAL	SEAL/SLEEVE
1	N11D-G	12	WH	3573654C1	3573655C1
2	N90B	12	GY	3573654C1	3573655C1

W/HYDRAULIC BRAKES

FULL POWER HCV CONNECTION
(9508)

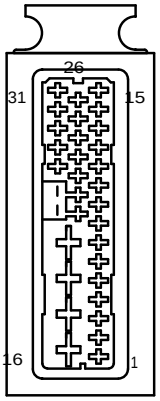

CONNECTOR - 3573648C1
CONNECTOR
BODY LOCK - 3573650C1

CAV	CIRCUIT	GAUGE	COLOR	TERMINAL	SEAL/SLEEVE
1	N90S	18	GY	3573652C1	3573653C1
2	N90J	18	GY	3573652C1	3573653C1
3	N90H	18	GY	3573652C1	3573653C1
4	N44J	18	GY	3573652C1	3573653C1
5	N44C	18	GY	3573652C1	3573653C1
6	N44-GB	18	WH	3573652C1	3573653C1
7	N90U	18	GY	3573652C1	3573653C1
8	N94W	18	GY	3573652C1	3573653C1
9	N90M	18	GY	3573652C1	3573653C1
10	N90T	18	GY	3573652C1	3573653C1
11	N44	18	GY	3573652C1	3573653C1
12	N90L	18	GY	3573652C1	3573653C1
13	N94U	18	GY	3573652C1	3573653C1
14	N5DB+	18	YL	3573652C1	3573653C1
15	N5DB-	18	GN	3573652C1	3573653C1
16	N90C	12	GY	3573654C1	3573655C1
17	N90D	12	GY	3573654C1	3573655C1
18	N11A-G	12	WH	3573654C1	3573655C1
19	N94-GB	12	WH	3573654C1	3573655C1
20	N90P	18	GY	3573652C1	3573653C1
21	N94H	18	GY	3573652C1	3573653C1
22	[N94RR+]	18	DK BL	3573652C1	3573653C1
23	[N94LR+]	18	GY	3573652C1	3573653C1
24	[N94LF+]	18	GY	3573652C1	3573653C1
25	[N94RF+]	18	DK BL	3573652C1	3573653C1
26	N3BB-	18	GY	3573652C1	3573653C1
27	---	---	---	1675451C1	N/A
28	[N94LR-]	18	OR	3573652C1	3573653C1
29	[N94LF-]	18	OR	3573652C1	3573653C1
30	[N94RF-]	18	YL	3573652C1	3573653C1
31	N3BB+	18	DK BL	3573652C1	3573653C1
32	---	---	---	---	N/A

W/HYDRAULIC BRAKES

CHK	DATE	CHANGE	REV	REFERENCE	DRAWN	NAME		
					U00K640	PB30500, PC30500, RE30030		
					RELEASE NO.	DATE	PART NO.	SHEET
					50342E	12DEC05	AF08-54925	35E

Figure 140 Connector Composites (9507), (9508)

Connector Composites (9509), (9510), (9511), p. 35F

INTERNATIONAL TRUCK AND ENGINE CORPORATION

THIS PRINT IS PROVIDED ON A RESTRICTED BASIS AND IS NOT TO BE USED IN ANY WAY DETRIMENTAL TO THE INTEREST OF INTERNATIONAL TRUCK AND ENGINE CORPORATION.

ELECTRICAL CIRCUIT DIAGRAM CHAPTER 10

CONNECTOR BODY COMPOSITES: CONNECTOR BODY COMPOSITES(MATING END VIEW) Continued

MASTER CYLINDER STOP LIGHT
(9509)

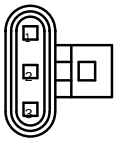

CONNECTOR - 3522187C1

CAV	CIRCUIT	GAUGE	COLOR	TERMINAL	SEAL/SLEEVE
1	N90T	18	GY	3522190C1	3522193C1
2	N90F	16	GY	3522190C1	3522193C1

W/HYDRAULIC BRAKES

MASTER CYLINDER LOW
FLUID LEVEL
(9510)

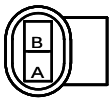

CONNECTOR - 2036583C1

CAV	CIRCUIT	GAUGE	COLOR	TERMINAL
A	N90MN	18	GY	2036586C1
B	N11-GN	18	WH	2036586C1

W/HYDRAULIC BRAKES

AUX.RESERVOIR LOW
FLUID LEVEL
(9511)

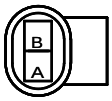

CONNECTOR - 2036583C1

CAV	CIRCUIT	GAUGE	COLOR	TERMINAL
A	N90MP	18	GY	2036586C1
B	N11-GP	18	WH	2036586C1

W/HYDRAULIC BRAKES

CHK	DATE	CHANGE	REV	REFERENCE	DRAWN	NAME		
					U00K640	PB30500, PC30500, RE30030		
					RELEASE NO. 50342E	DATE 12DEC05	PART NO. AE08-54925	SHEET 35F

Figure 141 Connector Composites (9509), (9510), (9511)

Connector Composites (9550), (9850), p. 35G

INTERNATIONAL TRUCK AND ENGINE CORPORATION

THIS PRINT IS PROVIDED ON A RESTRICTED BASIS AND IS NOT TO BE USED IN ANY WAY DETRIMENTAL TO THE INTEREST OF INTERNATIONAL TRUCK AND ENGINE CORPORATION.

ELECTRICAL CIRCUIT DIAGRAM CHAPTER 10

CONNECTOR BODY COMPOSITES: CONNECTOR BODY COMPOSITES(MATING END VIEW) Continued

ATC SOLENOID
(9550)

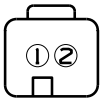

CONNECTOR - 3518183C1
CONNECTOR
BODY LOCK - 3518174C1

W/AIR BRAKES &W/TRACTION
W/AIR BRAKES CONTROL

CAV	CIRCUIT	GAUGE	COLOR	TERMINAL
1	PK/WH	16	PK	3518961C1
2	TN/WH	16	TN	3518961C1

CHASSIS/ENGINE CONNECTOR
(9850)
(LOCATED ABOVE OF XMSN)

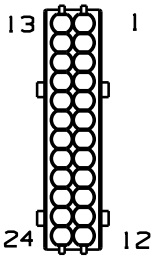

CONNECTOR - 3558022C1
CONNECTOR
BODY LOCK - 3558056C1

CAV	CIRCUIT	GAUGE	COLOR	TERMINAL	SEAL/SLEEVE
1	PLUG	---	---	3532129C1	N/A
2	PLUG	---	---	3532129C1	N/A
3	K71 ••	16	OR	3559037C1	3509903C1
3	K71 •	18	OR	3559036C1	3532128C1
4	K71A %	16	OR	3559037C1	3509903C1
4	K71A %%	18	OR	3559036C1	3532128C1
5	PLUG	---	---	3532129C1	N/A
6	K31A	18	TN	3559036C1	3509903C1
7	PLUG	---	---	3532129C1	N/A
8	K26	18	TN	3559036C1	3509903C1
9	K40	16	GY	3559037C1	3509903C1
10	K97YA	18	VT	3559036C1	3509903C1
11	K17	18	PK	3559036C1	3509903C1
12	K13K	16	PK	3559037C1	3509903C1
13	PLUG	---	---	3532129C1	N/A
14	K5D-	18	GN	3559036C1	3532128C1
15	K5D+	18	YL	3559036C1	3532128C1
16	K3B+	18	DK BL	3559036C1	3509903C1
17	K3B-	18	GY	3559036C1	3509903C1
18	PLUG	---	---	3532129C1	N/A
19	PLUG	---	---	3532129C1	N/A
20	K97ACE	16	VT	3559037C1	3509903C1
21	PLUG	---	---	3532129C1	N/A
22	PLUG	---	---	3532129C1	N/A
23	PLUG	---	---	3532129C1	N/A
24	K39A	16	GY	3559037C1	3509903C1

• W/LCT GEN IV XMSN
•• N/V8 ENGINE & LCT GEN IV
% W/V8 & W/LCT GEN IV XMSN
%% W/V8 & W/LCT GEN IV

CHK	DATE	CHANGE	REV	REFERENCE	DRAWN	NAME
CNA	30AUG06	ADDED CIRCUIT K97ACE	A	60540L	U00K640	CONNECTOR COMPOSITES, PB30500, PC30500, RE30030
					RELEASE NO. 50342E	DATE 12DEC05 PART NO. AE08-54925 SHEET 35G

Figure 142 Connector Composites (9550), (9850)

Connector Composite (9850), p. 35H

INTERNATIONAL TRUCK AND ENGINE CORPORATION

THIS PRINT IS PROVIDED ON A RESTRICTED BASIS AND IS NOT TO BE USED IN ANY WAY DETRIMENTAL TO THE INTEREST OF INTERNATIONAL TRUCK AND ENGINE CORPORATION.

ELECTRICAL CIRCUIT DIAGRAM CHAPTER 10

CONNECTOR BODY COMPOSITES: CONNECTOR BODY COMPOSITES(MATING END VIEW) Continued

CHASSIS/ENGINE CONNECTOR
(9850)
(LOCATED ABOVE OF XMSN)

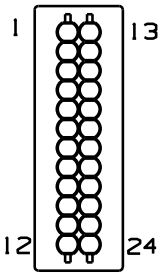

CONNECTOR - 3558026C1
CONNECTOR BODY LOCK - 3558056C1

CAV	CIRCUIT	GAUGE	COLOR	TERMINAL	SEAL/SLEEVE
1	N97AF •	18	VT	3509874C1	3509903C1
2	PLUG	---	---	3532129C1	N/A
3	N71	18	OR	3509874C1	3509903C1
4	N71A	16	OR	3559035C1	3509903C1
5	N24 •	18	GY	3509874C1	3509903C1
6	N31A	18	TN	3509874C1	3509903C1
7	N97Y •	18	VT	3509874C1	3509903C1
8	N26	16	TN	3559035C1	3509903C1
9	N40	18	GY	3509874C1	3509903C1
10	N97Y%	18	VT	3509874C1	3509903C1
10	N97YA ••	18	VT	3509874C1	3509903C1
11	N17	18	PK	3509874C1	3509903C1
12	N13K	18	PK	3509874C1	3509903C1
13	PLUG	---	---	3532129C1	N/A
14	N5D-	18	GN	3509874C1	3532128C1
15	N5D+	18	YL	3509874C1	3532128C1
16	N3B+	18	DK BL	3509874C1	3509903C1
17	N3B-	18	GY	3509874C1	3509903C1
18	PLUG	---	---	3532129C1	N/A
19	N97DH •	18	VT	3509874C1	3509903C1
20	N97DE •	18	VT	3509874C1	3509903C1
20	N97ACE ••	16	VT	3559035C1	3509903C1
21	PLUG	---	---	3532129C1	N/A
22	PLUG	---	---	3532129C1	N/A
23	N97T •	18	VT	3509874C1	3509903C1
24	N39A	14	GY	3559035C1	3575783C1

• W/HYDRAULIC BRAKES
•• W/AIR BRAKES
% W/ABS6 BRAKES

CHK	DATE	CHANGE	REV	REFERENCE	DRAWN	NAME
CNA	30AUG06	ADDED CIRCUIT N97ACE	A	60540L	U00K640	CONNECTOR COMPOSITES, PB30500, PC30500, RE30030
					RELEASE NO. 50342E	DATE 12DEC05 PART NO. AE08-54925 SHEET 35H

Figure 143 Connector Composite (9850)

Connector Composite (9851), p. 36

INTERNATIONAL TRUCK AND ENGINE CORPORATION

THIS PRINT IS PROVIDED ON A RESTRICTED BASIS AND IS NOT TO BE USED IN ANY WAY DETRIMENTAL TO THE INTEREST OF INTERNATIONAL TRUCK AND ENGINE CORPORATION.

ELECTRICAL CIRCUIT DIAGRAM CHAPTER 10

CONNECTOR BODY COMPOSITES: CONNECTOR BODY COMPOSITES(MATING END VIEW) Continued

CHASSIS/ENGINE CONNECTOR
(9851)
(LOCATED ABOVE OF XMSN)

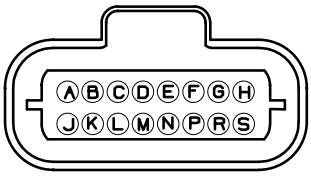

CONNECTOR-3580539C1

CAV	CIRCUIT	GAUGE	COLOR	TERMINAL	SEAL/SLEEVE
A	N97N	18	PL	3534160C1	3535427C1
B	K99B**	16	PL	3534162C1	3535428C1
B	K99B1%%	16	VT	3534162C1	3535427C1
C	PLUG	---	---	3535430C1	N/A
D	PLUG	---	---	3535430C1	N/A
E	K19A$$	14	GY	3534163C1	3535428C1
E	K19A$	16	GY	3534162C1	3535428C1
F	K19C$	16	GY	3534162C1	3535428C1
G	K99A@	16	PL	3534162C1	3535427C1
G	K99A@@	16	VT	3534162C1	3535428C1
G	K99A@@@	18	TN	3534162C1	3535427C1
H	K99C5V	18	PL	3534162C1	3535427C1
J	K99D	18	PL	3534162C1	3535427C1
K	K98N(+)$	16	BK	3534162C1	3535428C1
L	PLUG	---	---	3535430C1	N/A
M	PLUG	---	---	3535430C1	N/A
N	PLUG	---	---	3535430C1	N/A
P	PLUG	---	---	3535430C1	N/A
R	PLUG	---	---	3535430C1	N/A
S	PLUG	---	---	3535430C1	N/A

* W/V8 ENGINE W/LCT GEN IV
** N/V8 ENGINE & LCT GEN IV
% W/V8 ENGINE W/WTEC
%% W/V8 ENGINE W/LCT
□ W/V8 ENGINE
@ I6 ENGINE W/LCT XMSN
@@ I6 & V8 ENGINE W/WTEC XMSN,W/WTEC XMSN W/RETARDOR,W/WTEC GEN IV
@@@ V8 ENGINE W/LCT &W/LCT GEN IV

CHASSIS/ENGINE CONNECTOR
(9851)
(LOCATED ABOVE OF XMSN)

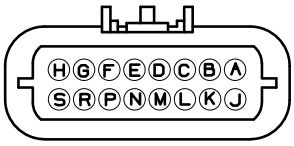

CONNECTOR-3580540C1

CAV	CIRCUIT	GAUGE	COLOR	TERMINAL	SEAL/SLEEVE
A	N97N	18	PL	3534160C1	3535427C1
B	N99B	18	PL	3534160C1	3535427C1
C	N97CF	18	PL	3534160C1	3535427C1
D	N97AE	18	PL	3534160C1	3535427C1
E	N19A	16	GY	3534160C1	3535427C1
F	N19C	18	GY	3534160C1	3535427C1
G	N99A	18	PL	3534160C1	3535427C1
H	N99C5V	18	PL	3534160C1	3535427C1
J	N99O	18	PL	3534160C1	3535427C1
K	-	-	-		
L	N97A	14	VT	3534160C1	3535428C1
M	N97L	14	VT	3534160C1	3535428C1
N	-	-	-	-	-
P	-	-	-	-	-
R	-	-	-	-	-
S	-	-	-	-	-

CHK	DATE	CHANGE	REV	REFERENCE	DRAWN	NAME
CNA	6JAN06	ADDED CLEAN POWER	A	50342E	GSC2	PB30500, PC30500, RE30030
		AND GEN4 EFFECTS			RELEASE NO. 56878R	DATE 15JUL03 / PART NO. AE08-54925 / SHEET 36

Figure 144 Connector Composite (9851)

Connector Composite (9875), p. 36A

INTERNATIONAL TRUCK AND ENGINE CORPORATION

THIS PRINT IS PROVIDED ON A RESTRICTED BASIS AND IS NOT TO BE USED IN ANY WAY DETRIMENTAL TO THE INTEREST OF INTERNATIONAL TRUCK AND ENGINE CORPORATION.

ELECTRICAL CIRCUIT DIAGRAM CHAPTER 10

CONNECTOR BODY COMPOSITES: CONNECTOR BODY COMPOSITES(MATING END VIEW) Continued

XMSN CHASSIS CONNECTOR
(9875)

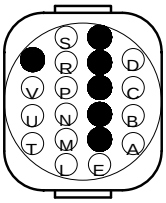

CONNECTOR - 3522537C91
CONNECTOR
BODY LOCK - 3518287C1

CAV	CIRCUIT	GAUGE	COLOR	TERMINAL
A	PLUG	---	---	3518314C1
B	PLUG	---	---	3518314C1
C	PLUG	---	---	3518314C1
D	PLUG	---	---	3518314C1
E	PLUG	---	---	3518314C1
F	K#110 *	18	YL	3517243C1
F	K#142 **	18	WH	3517243C1
G	K#123 *	18	PK	3517243C1
G	K#124 **	18	WH	3517243C1
H	K#125 *	18	LT GN	3517243C1
H	K#129 **	18	LT GN	3517243C1
J	PLUG	---	---	3518314C1
K	PLUG	---	---	3518314C1
L	PLUG	---	---	3518314C1
M	PLUG	---	---	3518314C1
N	K#103E **	18	YL	3517243C1
N	K#128E *	18	YL	3517243C1
P	K#113 *	18	PK	3517243C1
P	K#121 **	18	LT GN	3517243C1
R	PLUG	---	---	3518314C1
S	PLUG	---	---	3518314C1
T	PLUG	---	---	3518314C1
U	PLUG	---	---	3518314C1
V	PLUG	---	---	3518314C1
W	PLUG	---	---	3518314C1

* W/LCT XMSN
** W/LCT GEN IV XMSN

CHK	DATE	CHANGE	REV	REFERENCE	DRAWN	NAME		
					UOOK640	PB30500, PC30500, RE30030		
					RELEASE NO. 50342E	DATE 12DEC05	PART NO. AE08-54925	SHEET 36A

Figure 145 Connector Composite (9875)

Lamp Bulb Chart and Body Builder Information, p. 37

INTERNATIONAL TRUCK AND ENGINE CORPORATION

THIS PRINT IS PROVIDED ON A RESTRICTED BASIS AND IS NOT TO BE USED IN ANY WAY DETRIMENTAL TO THE INTEREST OF INTERNATIONAL TRUCK AND ENGINE CORPORATION.

ELECTRICAL CIRCUIT DIAGRAM — CHAPTER 10

CONNECTOR BODY COMPOSITES: LAMP BULB CHART & BODY BUILDER INFORMATION

LAMP BULB CHART

BULB APPLICATION	WATTS OR CANDLEPOWER	TRADE NUMBER
CONTROL IDENTIFICATION	0.5 CANDLEPOWER	21620
FOG LIGHT	55 WATTS	VH550
FRONT TURN SIGNAL	32 WATTS	2458
HEADLIGHT		
INCANDESCENT BULB		
LOW BEAM	55 WATTS	6053
HIGH BEAM	65 WATTS	6053
HALOGEN BULB		
LOW BEAM	42 WATTS	H5054
HIGH BEAM	65 WATTS	H5054

BODY BUILDER INFORMATION

(LOCATED ON LEFT SIDE OF STEERING COLUMN SUPPORT BRACKET)

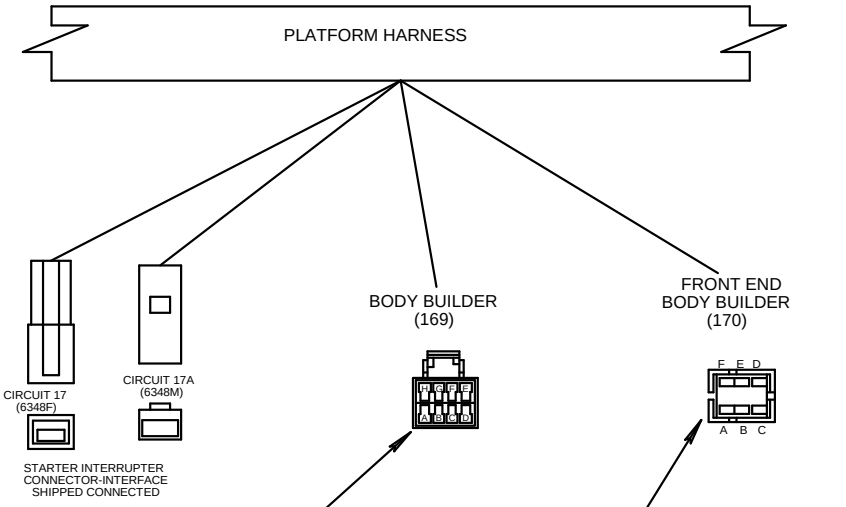

169 CONNECTOR		
CAVITY	CIRCUIT #	DESCRIPTION
A	A70A	STOP LIGHTS
B	A12D	ACC FEED
C	A62J	PANEL LIGHTS
D	A71A	BACK UP LIGHTS
E	A13D	IGNITION
F	A56C	LEFT TURN LIGHTS
G	A57C	RIGHT TURN LIGHTS
H	A58	MARKER LIGHTS

170 CONNECTOR		
CAVITY	CIRCUIT #	
A	A64A	FOG LIGHT RELAY
B	A57A	RIGHT TURN LIGHTS
C	A53B	LO BEAM HEADLIGHTS
D	A52B	HI BEAM HEADLIGHTS
E	A56A	LEFT TURN LIGHTS
F	---	--- ---

CHK	DATE	CHANGE	REV	REFERENCE	DRAWN	NAME		
					GSC2	PB30500, PC30500, RE30030		
					RELEASE NO. 56878R	DATE 17JUL03	PART NO. AE08-54925	SHEET 37

Figure 146 Lamp Bulb Chart and Body Builder Information

2. ELECTRICAL CIRCUIT DIAGRAMS — FE 300

2.1. INSTRUCTIONS AND CHARTS, (CHAPTER 1)

Circuit Diagram Instructions, p. 1

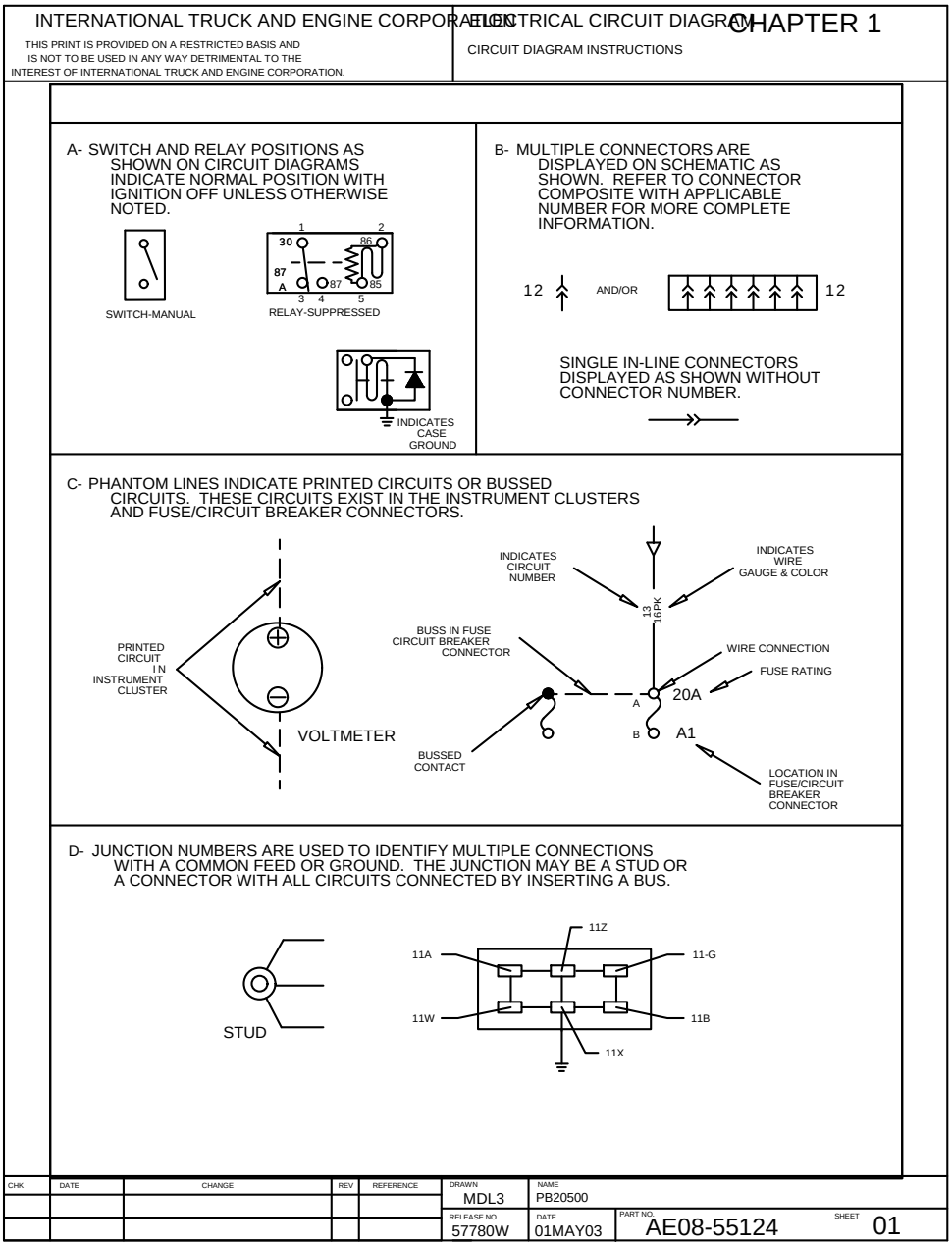

Figure 147 Circuit Diagram Instructions, Page 1

Circuit Diagram Instructions, p. 2

INTERNATIONAL TRUCK AND ENGINE CORPORATION

THIS PRINT IS PROVIDED ON A RESTRICTED BASIS AND IS NOT TO BE USED IN ANY WAY DETRIMENTAL TO THE INTEREST OF INTERNATIONAL TRUCK AND ENGINE CORPORATION.

ELECTRICAL CIRCUIT DIAGRAM CHAPTER 1

CIRCUIT DIAGRAM INSTRUCTIONS

E - CIRCUIT 11 DENOTES ANY COMMON GROUND, (MORE THAN ONE CIRCUIT). ANY INDIVIDUAL GROUND CIRCUIT IS IDENTIFIED WITH THAT PARTICULAR CIRCUIT NUMBER. (E.G CIRCUIT 97 CRUISE CONTROL, IS IDENTIFIED PER EXAMPLE).

NOTE: FOR CIRCUIT DESCRIPTION OTHER THAN GROUNDS, NEITHER THE LETTER G OR THE COLOR WHITE WILL BE USED.

GROUND CIRCUITS ARE DESCRIBED THUS:

11-G
11-GA
11-GB
SUFFIX
G IS NOT A SUFFIX BUT INDICATES A GROUND CIRCUIT
COMMON GROUND CIRCUIT NUMBER

97-G
97-GA
97-GB
SUFFIX
G IS NOT A SUFFIX BUT INDICATES A GROUND CIRCUIT
INDIVIDUAL GROUND CIRCUIT NUMBER

F - ABBREVIATIONS: COLOR AND NOUNS

COLOR ABBREVIATION

AQ - AQUA
BK - BLACK
BL - BLUE
BN - BROWN
DK GN - DARK GREEN
GD - GOLD
GY - GRAY
GN - GREEN
LT BL - LIGHT BLUE
LT GN - LIGHT GREEN
OR - ORANGE
PK - PINK
PL - PURPLE
RD - RED
SIL - SILVER
TN - TAN
VT - VIOLET
WH - WHITE
YL - YELLOW

ENGINE ABBREVIATION

I6-CEC -MFG (NAVISTAR)NGD I6-HEUI ELECTRONIC ENGINE CONTROL (ENGINE MOUNTED CONTROL MODULE)

NOUN ABBREVIATION

A, ACC - ACCESSORY
AC - AIR CONDITIONER
AUX - AUXILIARY
AWG - AMERICAN WIRE GAUGE
B, BAT - BATTERY
CONN - CONNECTION OR CONNECTOR
DRL - DAYTIME RUNNING LIGHTS
ENG - ENGINE
FWD - FORWARD
GA - GAUGE
G, GND - GROUND
I, IGN - IGNITION
IND - INDICATOR
L - LEFT
LT - LIGHT
OPT - OPTIONAL
R - RIGHT
S - START OR SENDER
THERMO - THERMOSTAT
W/ - WITH
W/O - WITHOUT

CHK	DATE	CHANGE	REV	REFERENCE	DRAWN	NAME		
					MDL3	PB20500		
					RELEASE NO. 57780W	DATE 01MAY03	PART NO. AE08-55124	SHEET 02

Figure 148 Circuit Diagram Instructions, Page 2

Schematic Symbols, p. 3

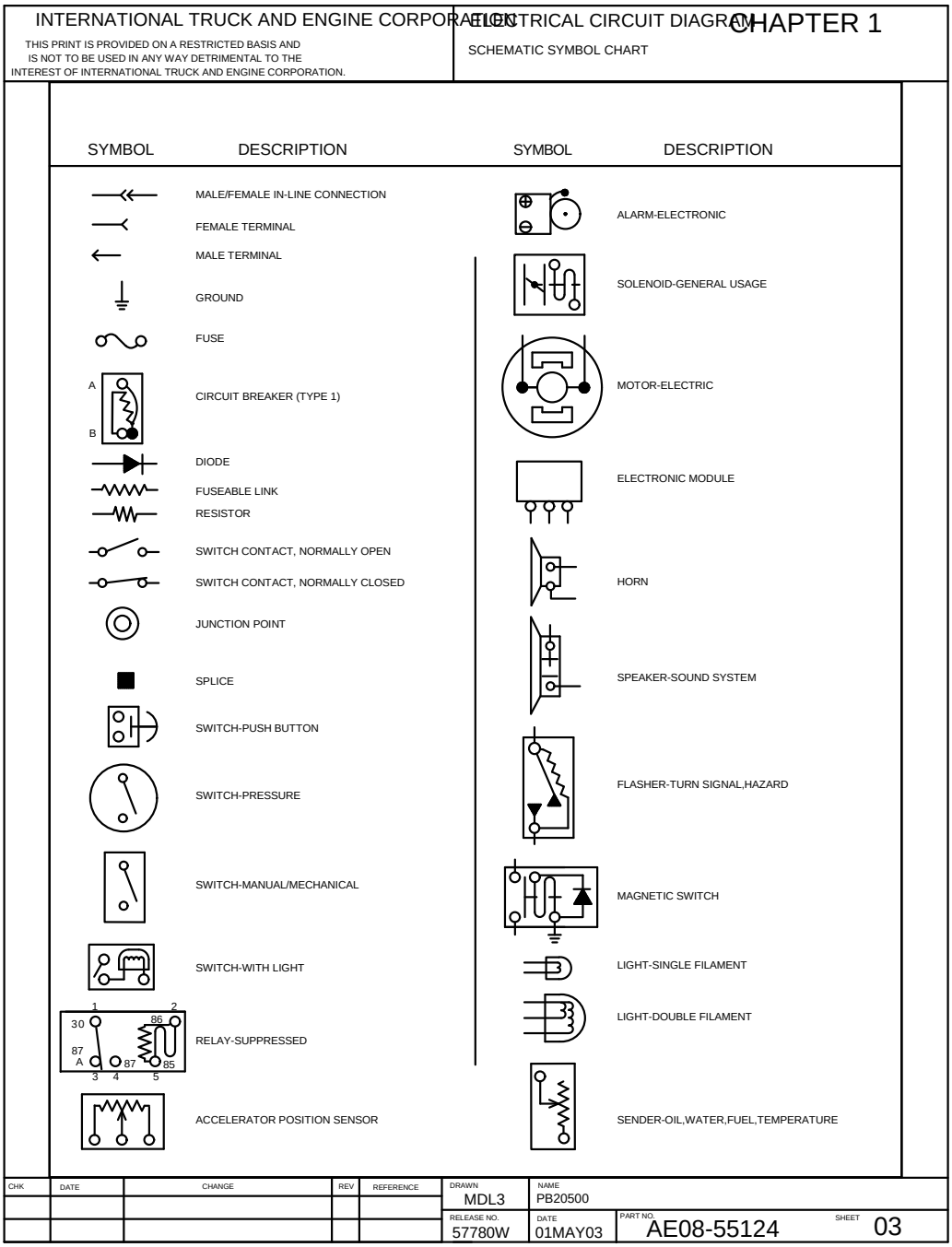

Figure 149 Schematic Symbols

Schematic Symbols, p. 4

INTERNATIONAL TRUCK AND ENGINE CORPORATION

THIS PRINT IS PROVIDED ON A RESTRICTED BASIS AND IS NOT TO BE USED IN ANY WAY DETRIMENTAL TO THE INTEREST OF INTERNATIONAL TRUCK AND ENGINE CORPORATION.

ELECTRICAL CIRCUIT DIAGRAM CHAPTER 1

SCHEMATIC SYMBOL CHART

SYMBOL	DESCRIPTION
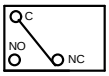	CLUTCH PEDAL SWITCH
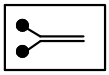	COOLANT LEVEL PROBE
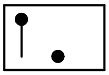	WATER PROBE (WIF)

CHK	DATE	CHANGE	REV	REFERENCE	DRAWN	NAME		
					MDL3	PB20500		
					RELEASE NO. 57780W	DATE 02MAY03	PART NO. AE08-55124	SHEET 04

Figure 150 Schematic Symbols

International Circuit Number Identification, p. 5

INTERNATIONAL TRUCK AND ENGINE CORPORATION

THIS PRINT IS PROVIDED ON A RESTRICTED BASIS AND IS NOT TO BE USED IN ANY WAY DETRIMENTAL TO THE INTEREST OF INTERNATIONAL TRUCK AND ENGINE CORPORATION.

ELECTRICAL CIRCUIT DIAGRAM CHAPTER 1

INSTRUCTIONS & CHARTS: NAVISTAR CIRCUIT NUMBER IDENTIFICATION

NAVISTAR CIRCUIT NUMBER IDENTIFICATION

CIRCUIT NUMBER	DESCRIPTION	CIRCUIT NUMBER	DESCRIPTION
1	ALTERNATOR-FIELD	37	
2	GENERATOR - CHARGE	38	
3	(+) & (-) ATA DATALINK/DIAGNOSTICS	39	
4		40	
5	J1939 DATALINK		
6		42	
7		43	
8		44	PARK BRAKE
9		45	
10		46	
11	GROUND	47	SPEEDOMETER
12	ACC FEED	48	TACHOMETER
13	IGNITION FEED	49	
14	BATTERY FEED	50	HEADLIGHTS FEED
15	KEY SWITCH FEED	51	DIMMER SWITCH
16		52	HEADLIGHT-HI BEAM
17	STARTER CONTROL	53	HEADLIGHT-LO BEAM
18		54	
19	WATER IN FUEL	55	TURN SIGNAL LIGHTS
20		56	LEFT TURN SIGNAL
21	ETHER START	57	RIGHT TURN SIGNAL
22		58	MARKER LIGHTS
23	ENGINE COOLING	59	
24	EXHAUST BRAKE	60	FLASHER
25		61	
26	AMMETER	62	PANEL LIGHTS
27	VOLTMETER	63	
28	INSTRUMENT FEED/GAUGES	64	
29	ENGINE WATER TEMPERATURE	65	
30		66	DAYTIME RUNNING LIGHTS
31	TRANSMISSION OIL TEMPERATURE	67	
32		68	
33		69	
34	COOLANT LEVEL	70	STOP LIGHTS
35	ENGINE OIL PRESSURE	71	BACK-UP LIGHTS
36	FUEL LEVEL	72	

CHK	DATE	CHANGE	REV	REFERENCE	DRAWN	NAME		
					MDL3	PB20500		
					RELEASE NO. 57780W	DATE 02MAY03	PART NO. AE08-55124	SHEET 05

Figure 151 International Circuit Number Identification

International Circuit Number Identification, p. 6

INTERNATIONAL TRUCK AND ENGINE CORPORATION

THIS PRINT IS PROVIDED ON A RESTRICTED BASIS AND IS NOT TO BE USED IN ANY WAY DETRIMENTAL TO THE INTEREST OF INTERNATIONAL TRUCK AND ENGINE CORPORATION.

ELECTRICAL CIRCUIT DIAGRAM CHAPTER 1

INSTRUCTIONS & CHARTS: NAVISTAR CIRCUIT NUMBER IDENTIFICATION

CIRCUIT NUMBER	DESCRIPTION	CIRCUIT NUMBER	DESCRIPTION
73		87	
74		88	
75		89	
76		90	HYDRAULIC BRAKE PUMP MOTOR
77		91	
78		92	ALLISON AUTOMATIC TRANSMISSION
79		93	
80		94	ANTI-LOCK BRAKES
81		95	
82		96	
83		97	CRUISE CONTROL/ENGINE CONTROLS
84		98	(+) & (-) ATA DATALINK/DIAGNOSTICS
85	HORN	99	ACCELERATOR POSITION SENSOR (APS)
86			

ALLISON AUTOMATIC TRANSMISSION CIRCUIT NUMBER NOTE:

CIRCUITS LABELED ALLISON SUPPLIED OR CIRCUITS NUMBERED 102 THRU 195 ARE ALLISON NUMBERING AND COLOR CODING CONVENTION AND DO NOT FOLLOW THE STANDARD NAVISTAR CONVENTION.

CHK	DATE	CHANGE	REV	REFERENCE	DRAWN	NAME		
					MDL3	PB20500		
					RELEASE NO. 57780W	DATE 02MAY03	PART NO. AE08-55124	SHEET 06

Figure 152 International Circuit Number Identification

2.2. POWER DISTRIBUTION (CHAPTER 2)

Battery, p. 1

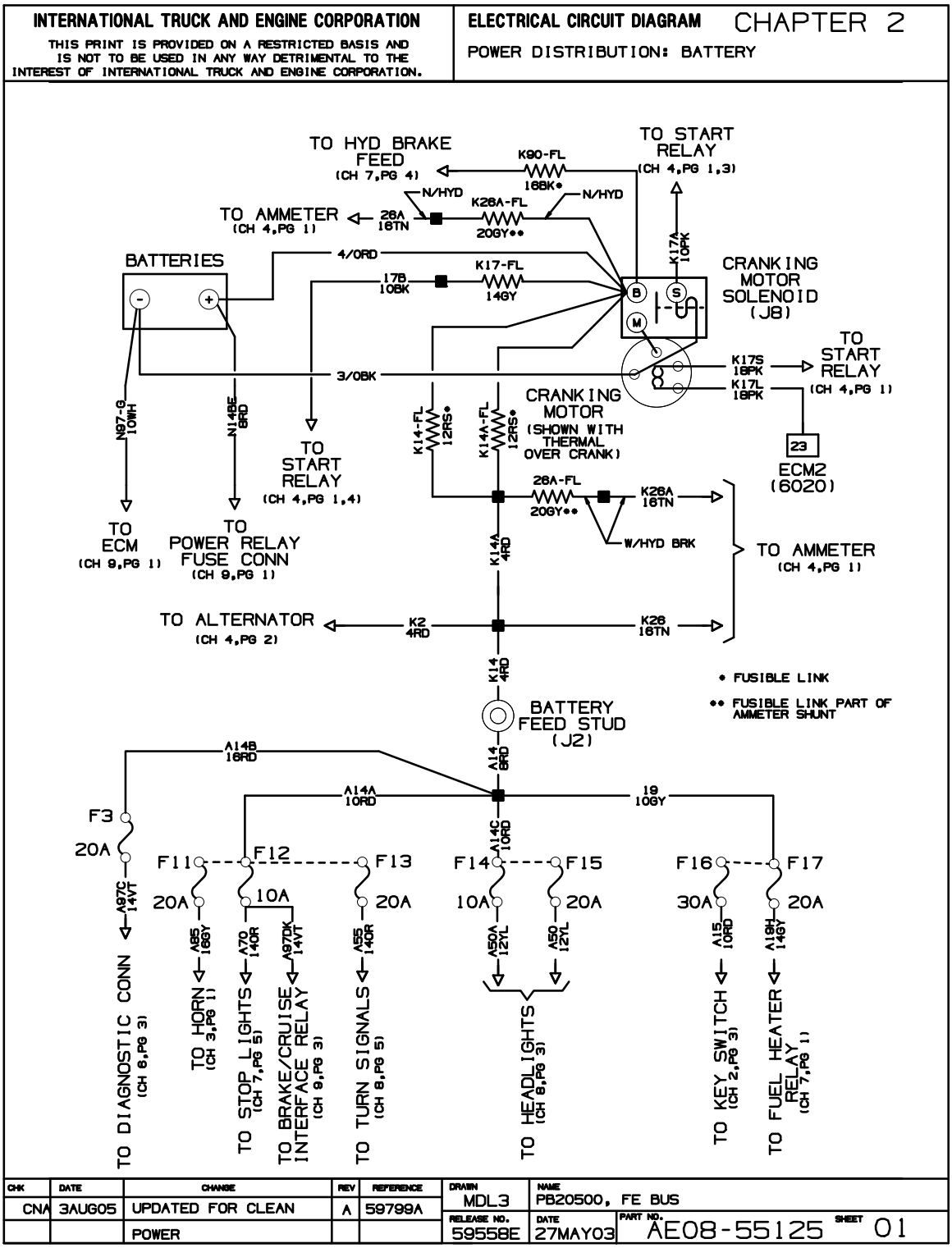

Figure 153 Battery

Ground, p. 2

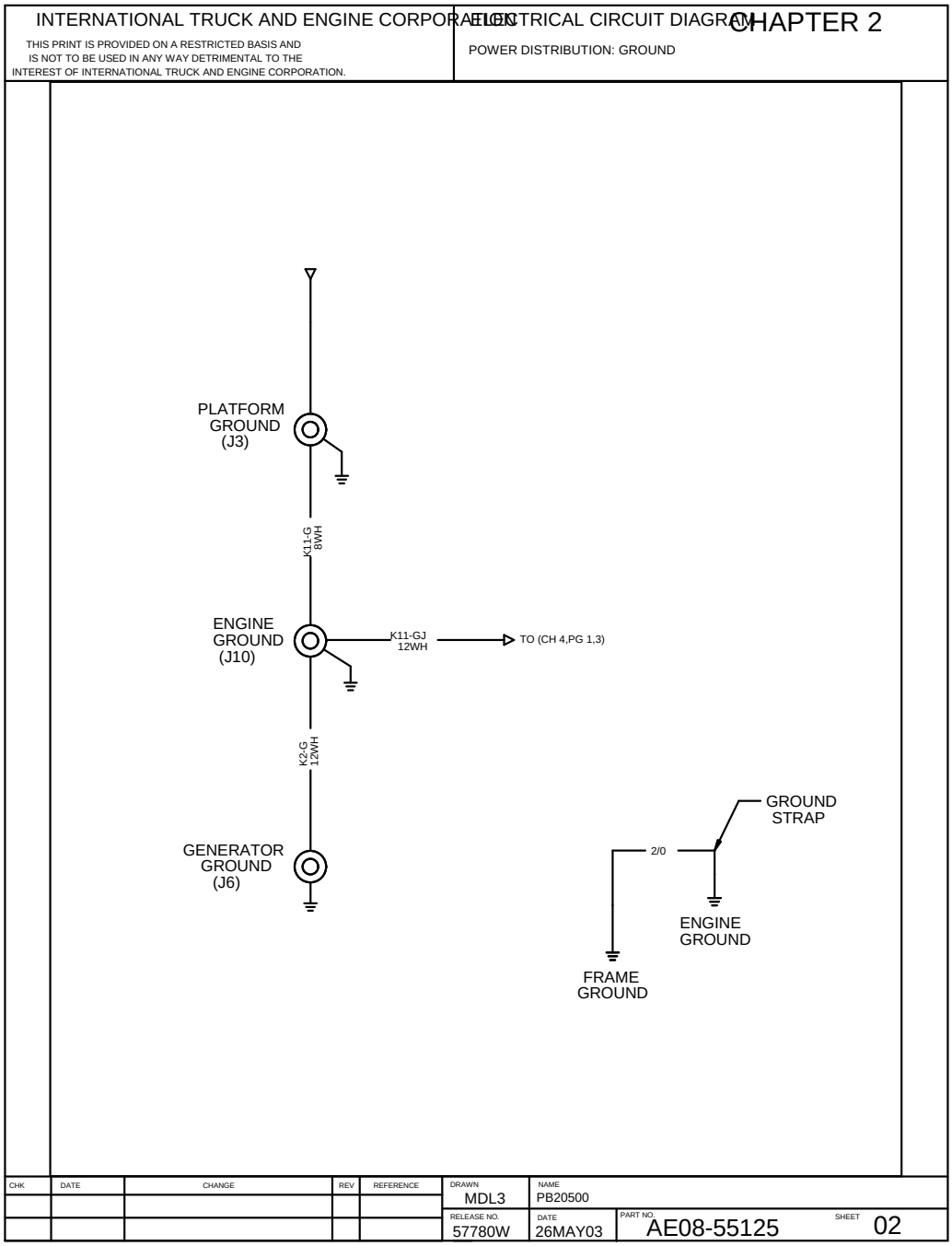

Figure 154 Ground

Ignition — Key Switch, p. 3

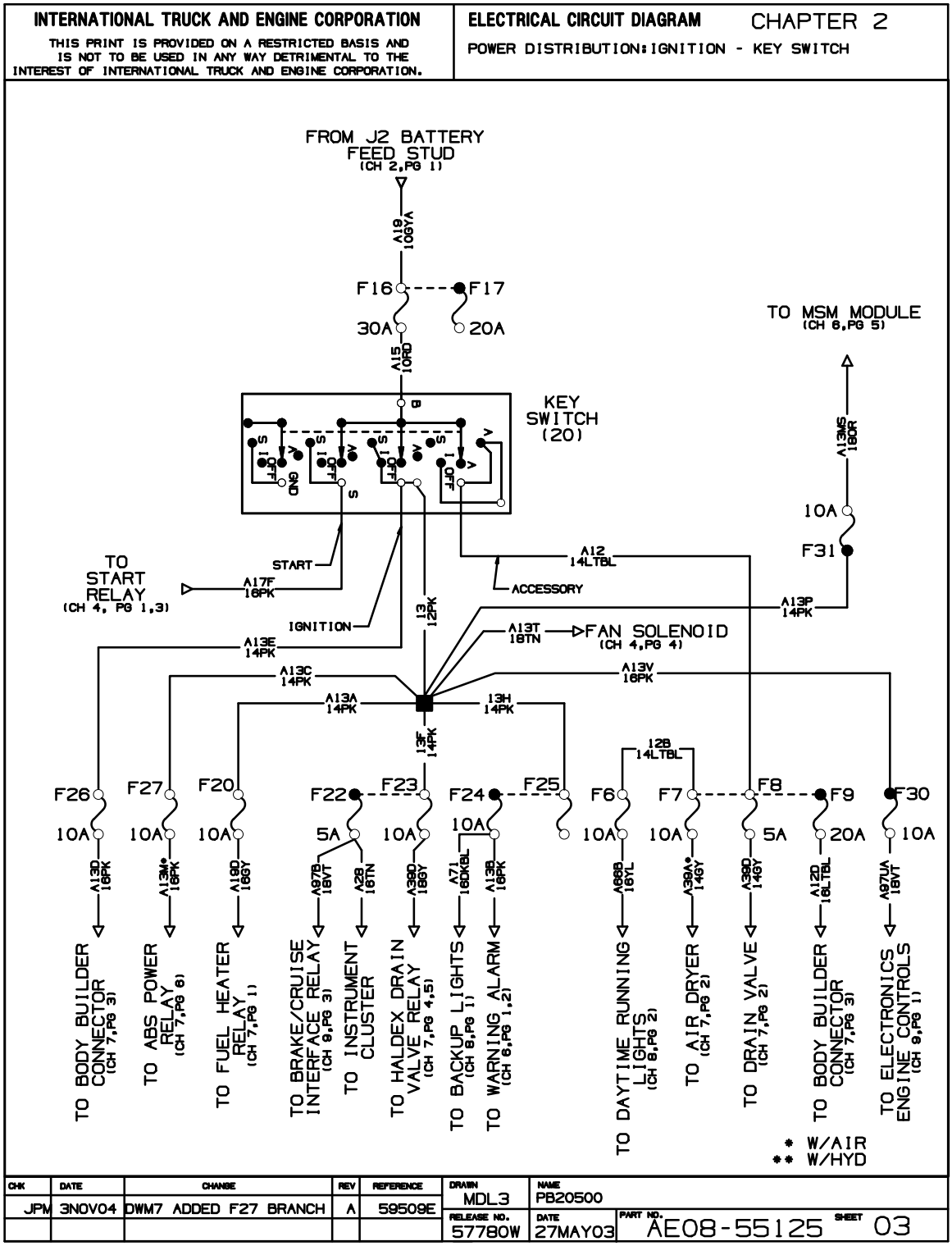

Figure 155 Ignition — Key Switch

Battery — ABS6, p. 4

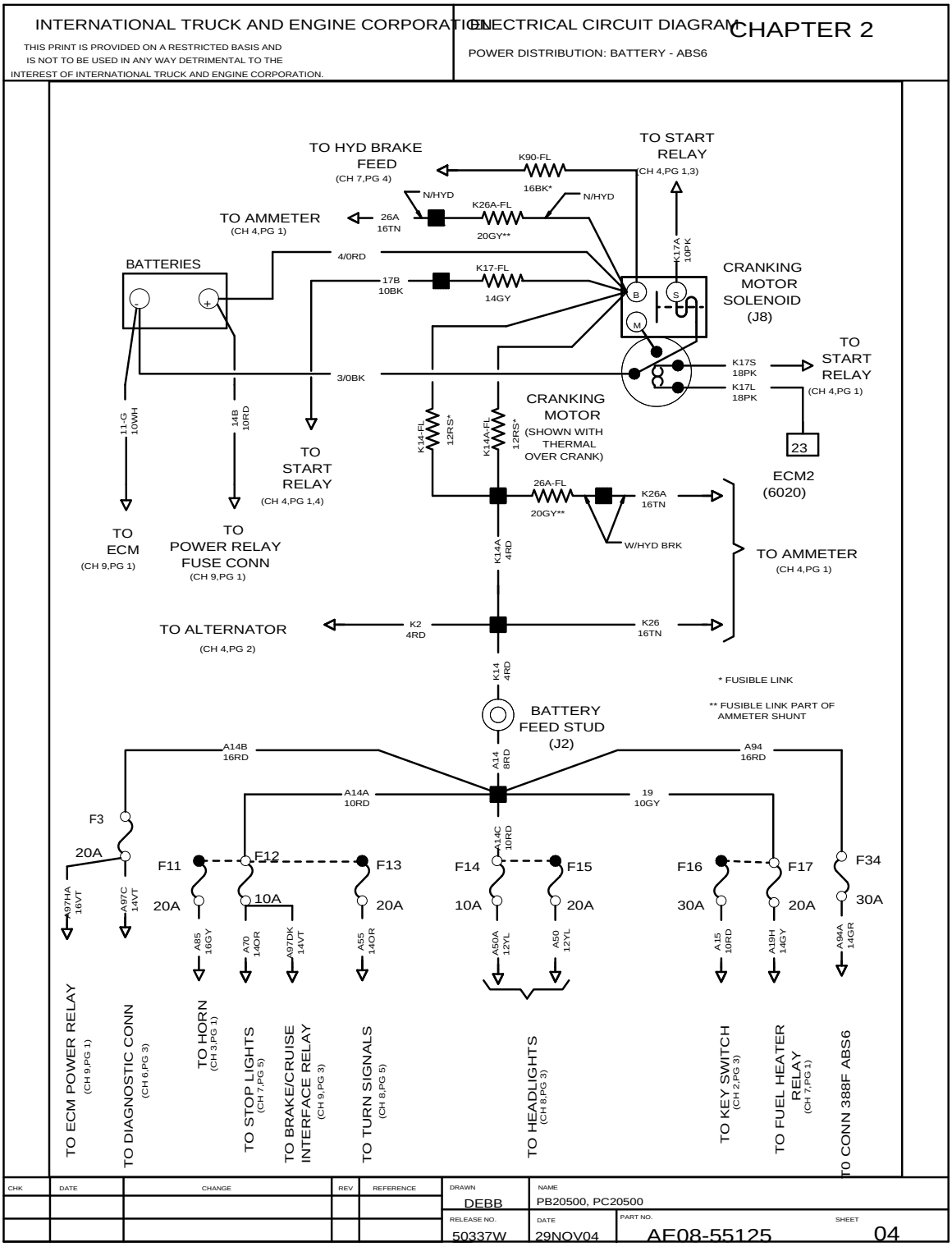

Figure 156 Battery — ABS6

Key Switch — ABS6, p. 5

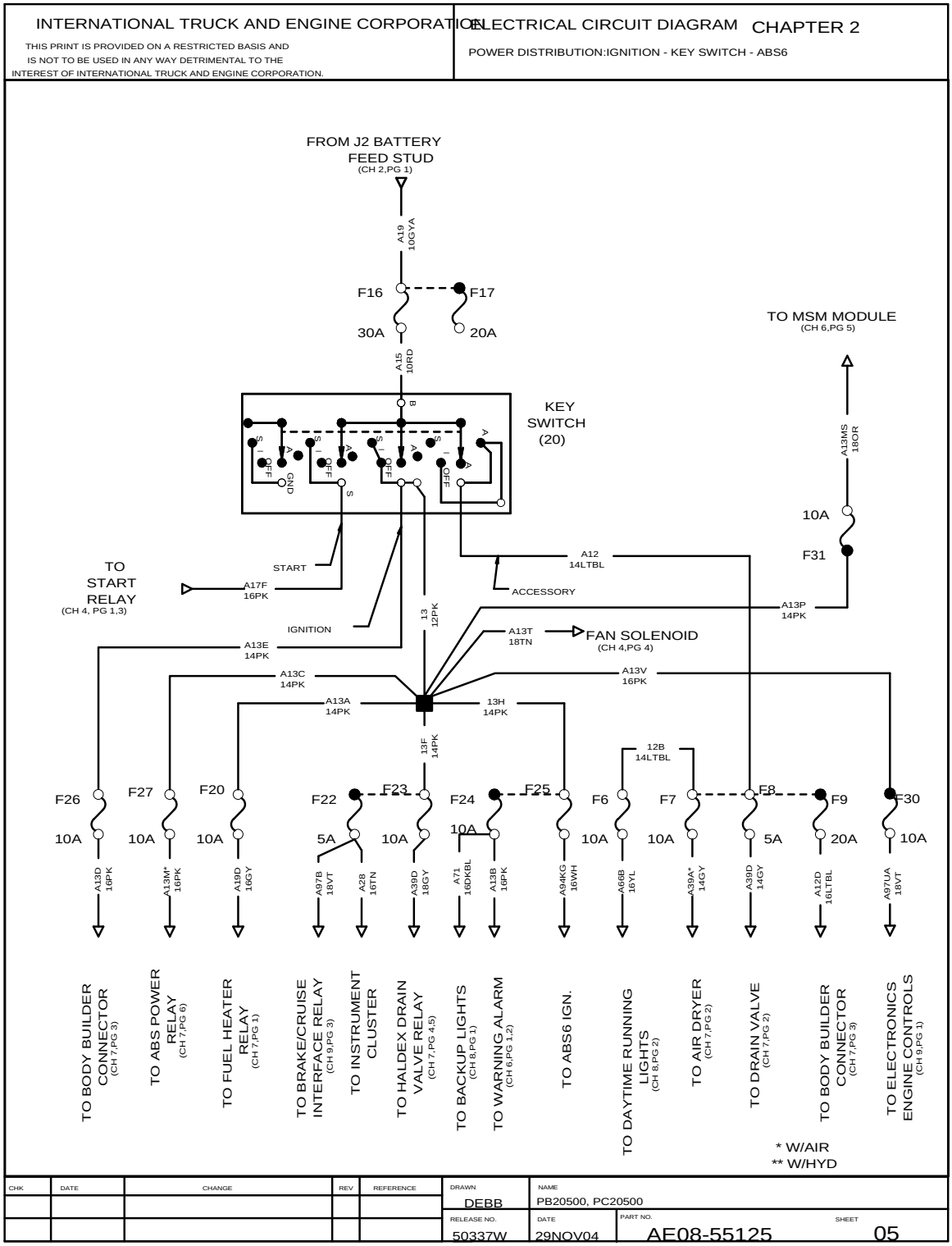

Figure 157 Key Switch — ABS6

2.3. CAB ACCESSORIES (CHAPTER 3)

Horn, p. 1

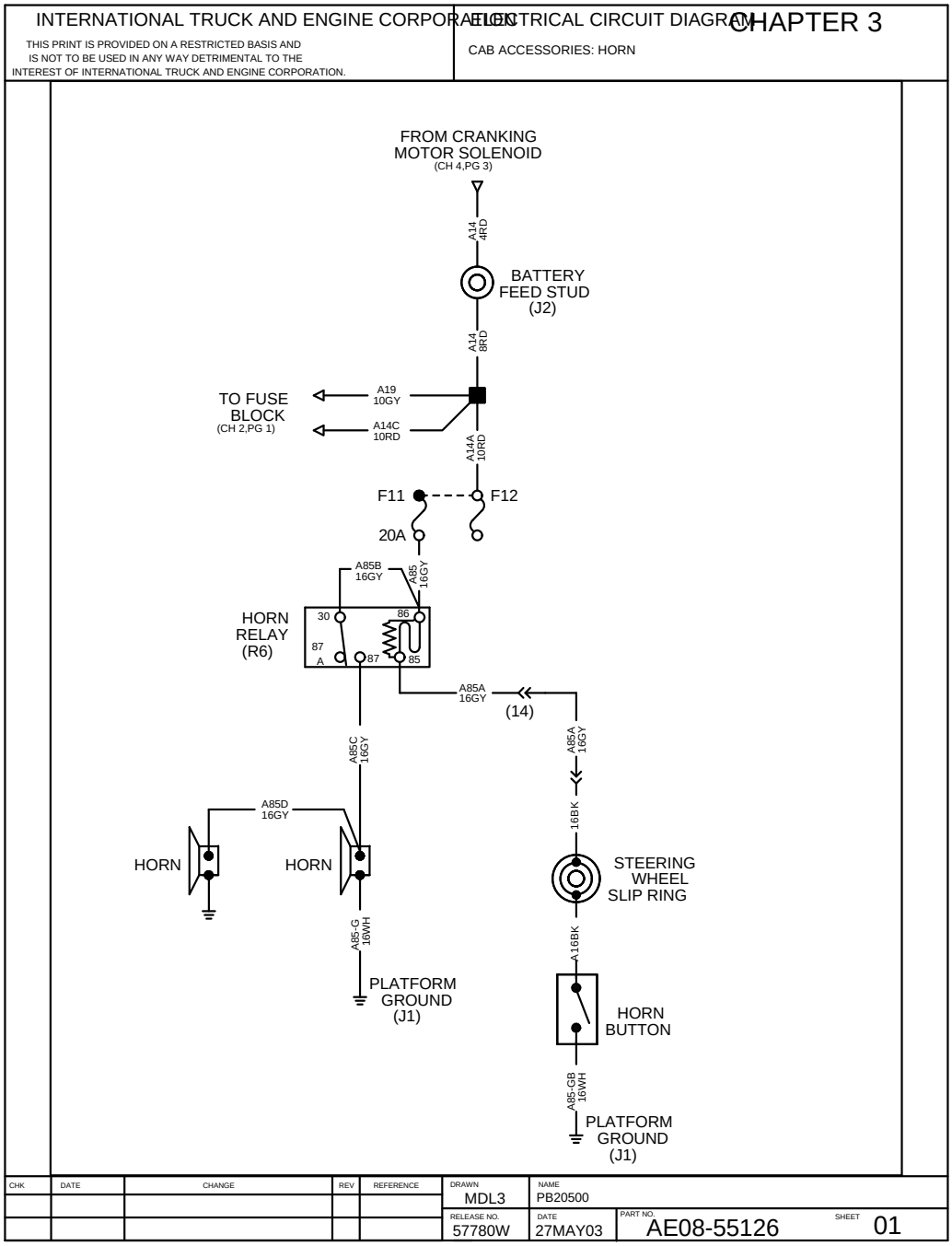

Figure 158 Horn

2.4. ENGINE SYSTEMS (CHAPTER 4)

Ammeter (Shunt), p. 1

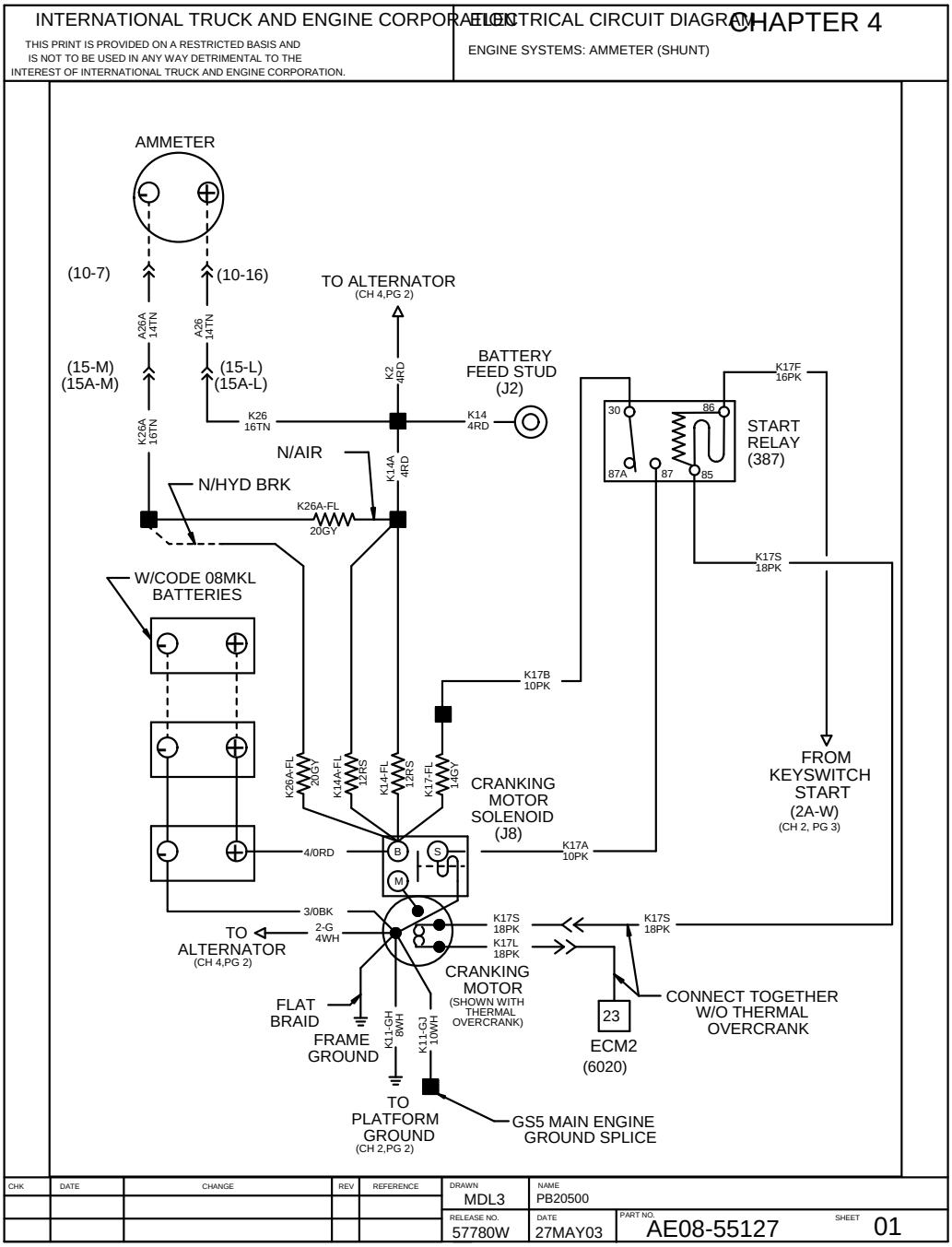

Figure 159 Ammeter (Shunt)

Charging System, p. 2

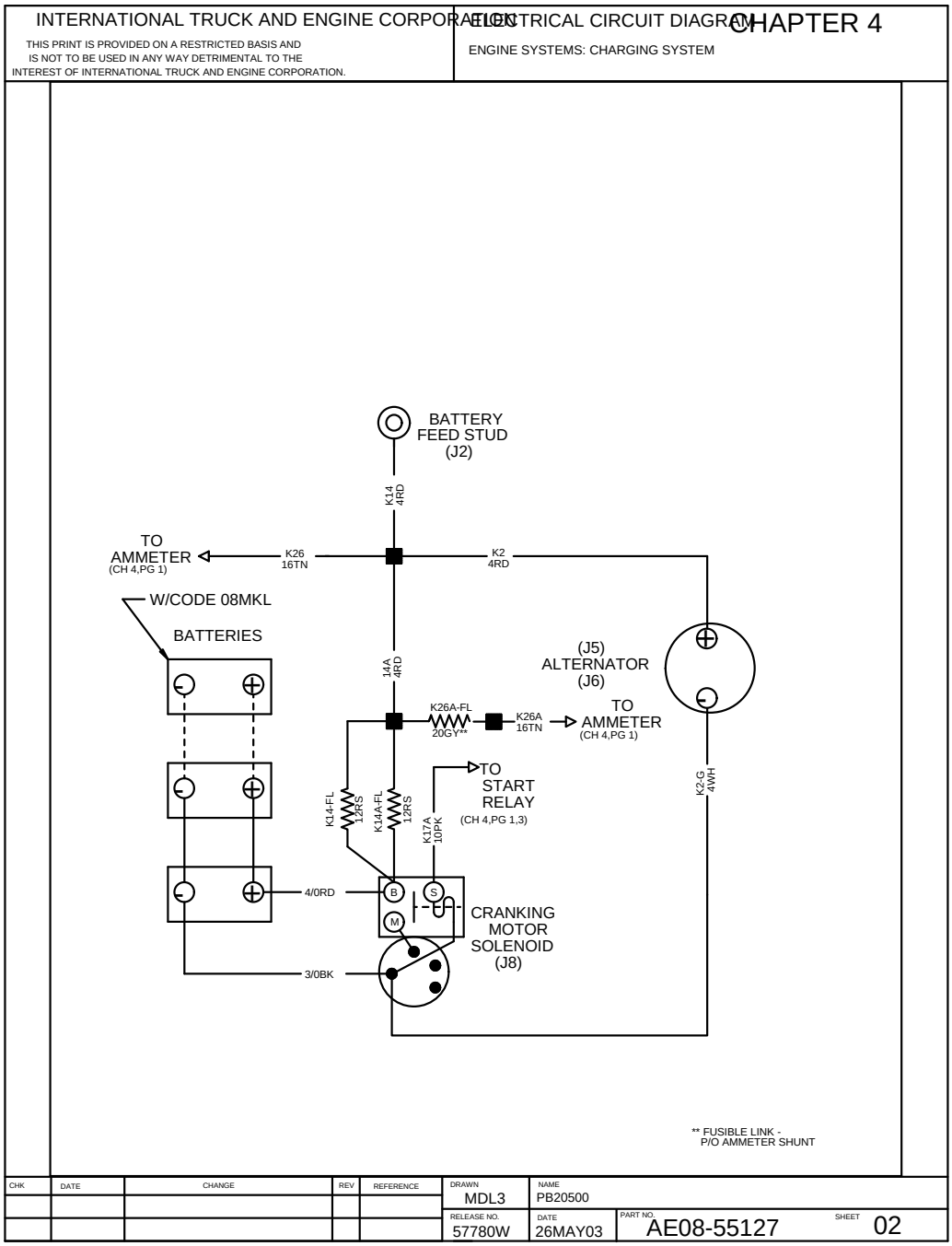

Figure 160 Charging System

Cranking System, p. 3

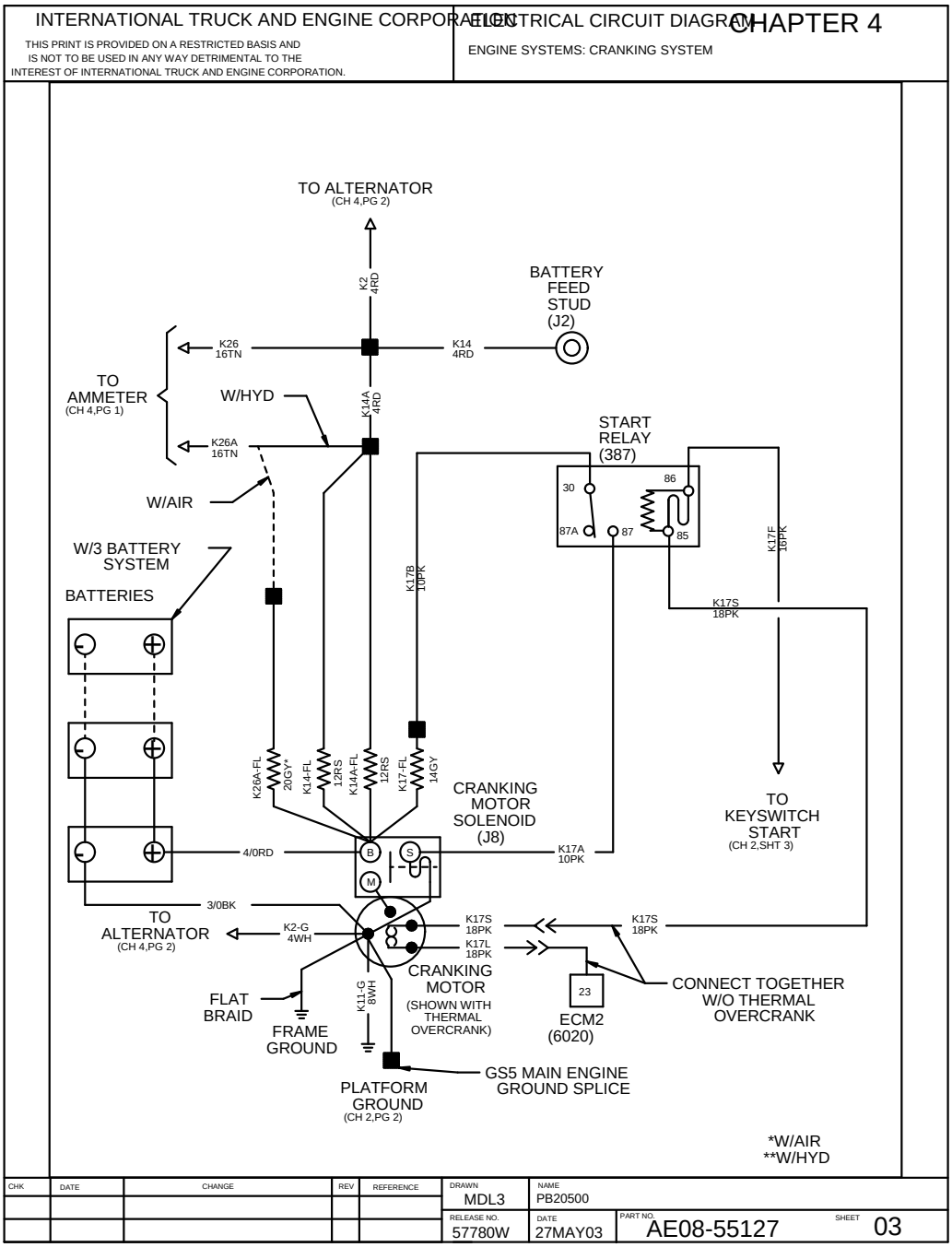

Figure 161 Cranking System

Horton Fan with Electric Solenoid Control, p. 4

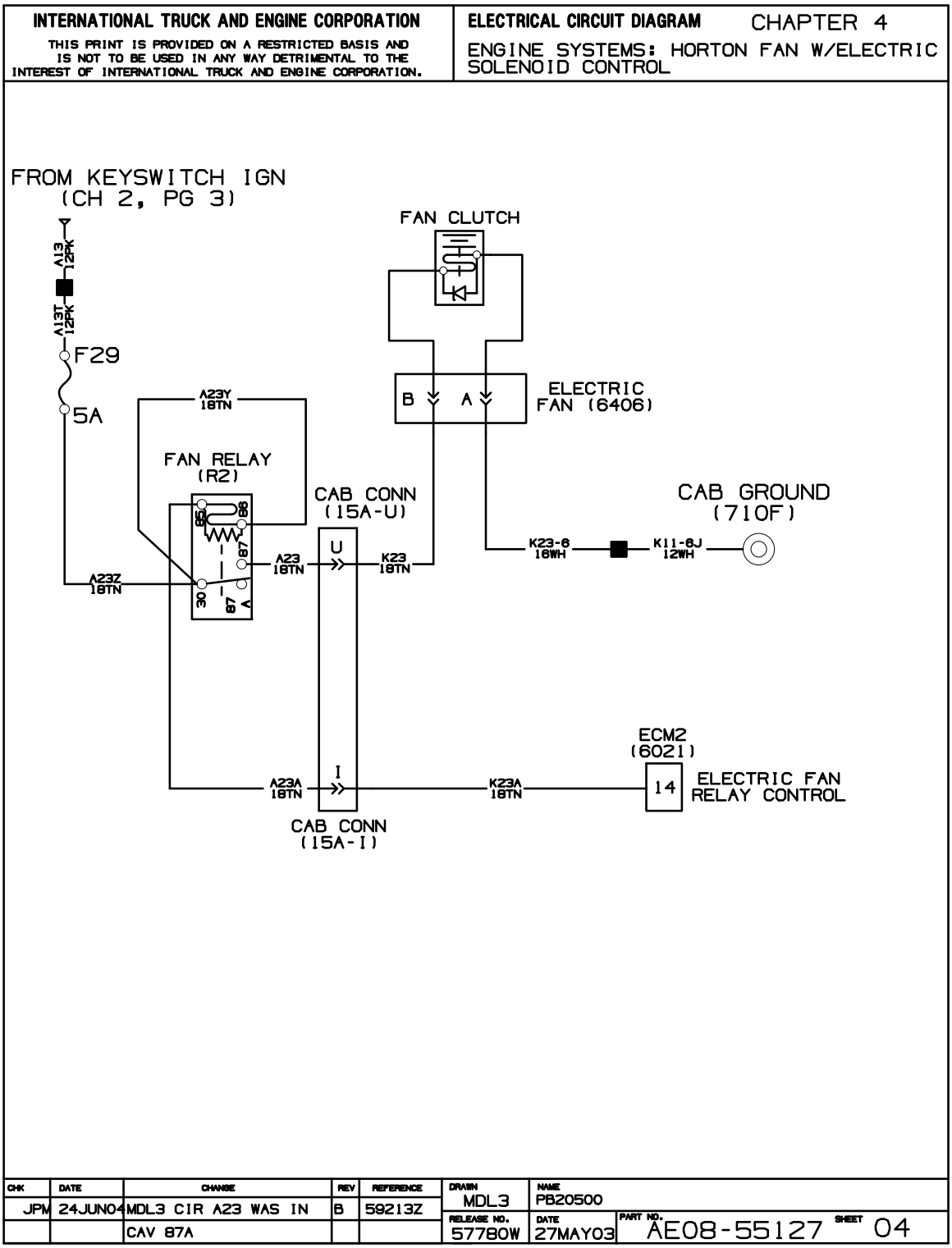

Figure 162 Horton Fan with Electric Solenoid Control

2.5. GAUGES (CHAPTER 5)

Fuel Level Gauge, p. 1

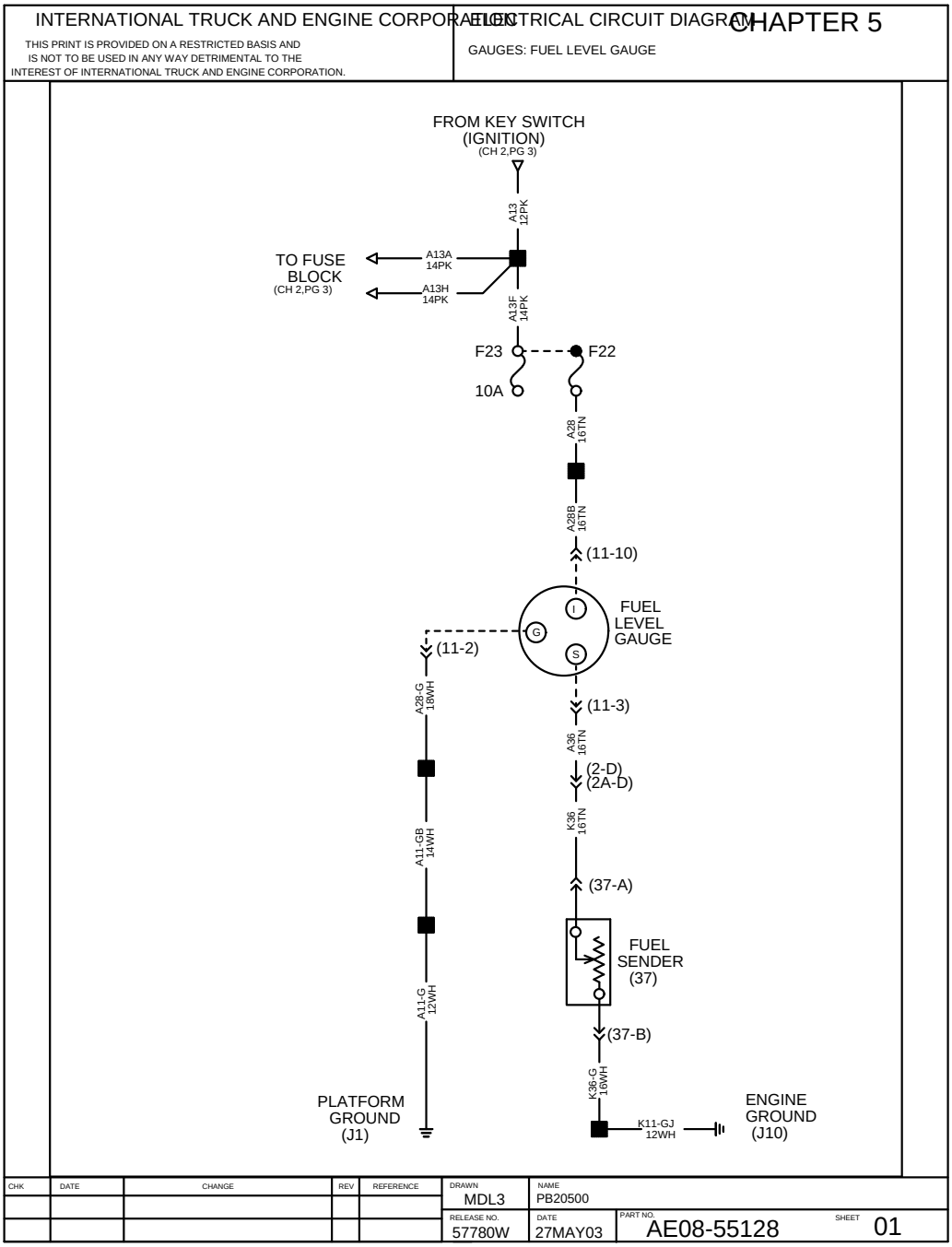

Figure 163 Fuel Level Gauge

Speedometer, Tachometer, Voltmeter, Engine Oil Pressure, Water Temperature, p. 2

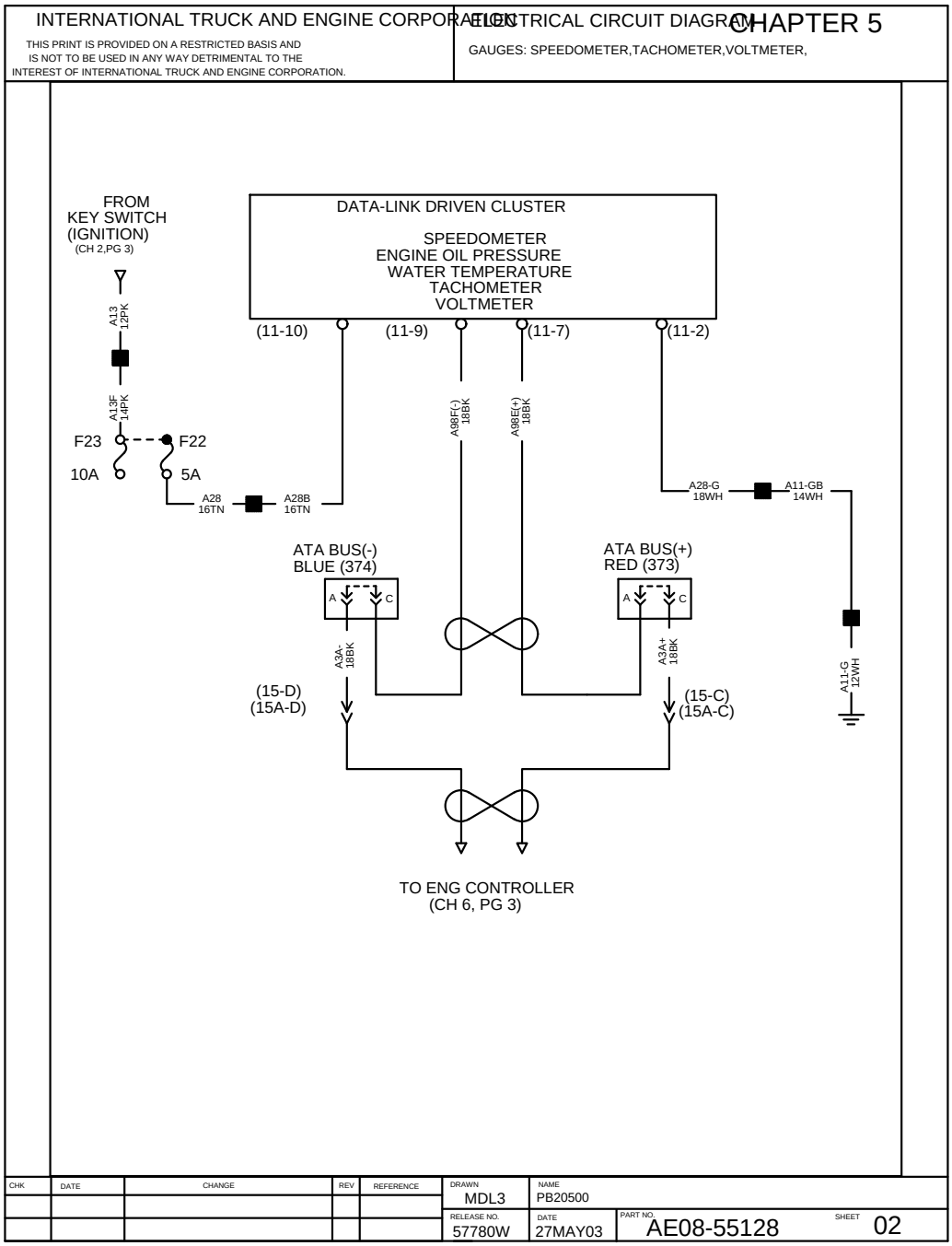

Figure 164 Speedometer, Tachometer, Voltmeter, Engine Oil Pressure, Water Temperature

Transmission Temperature Gauge, p. 3

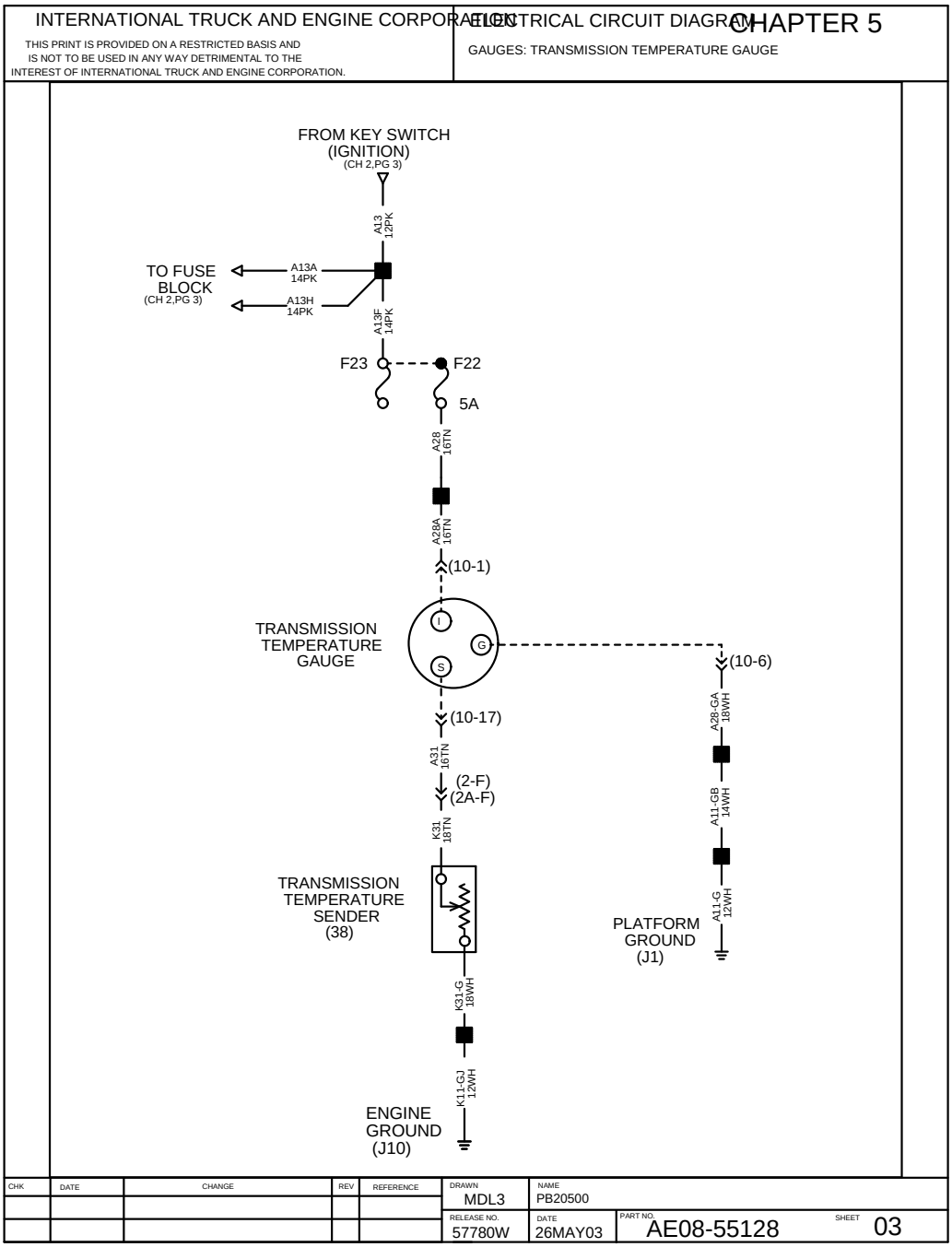

Figure 165 Transmission Temperature Gauge

2.6. WARNING LIGHTS (CHAPTER 6)

Low Oil Pressure/High Water Temp./Low Coolant Level/Brake Warning (Air) Lights and Alarm, p. 1

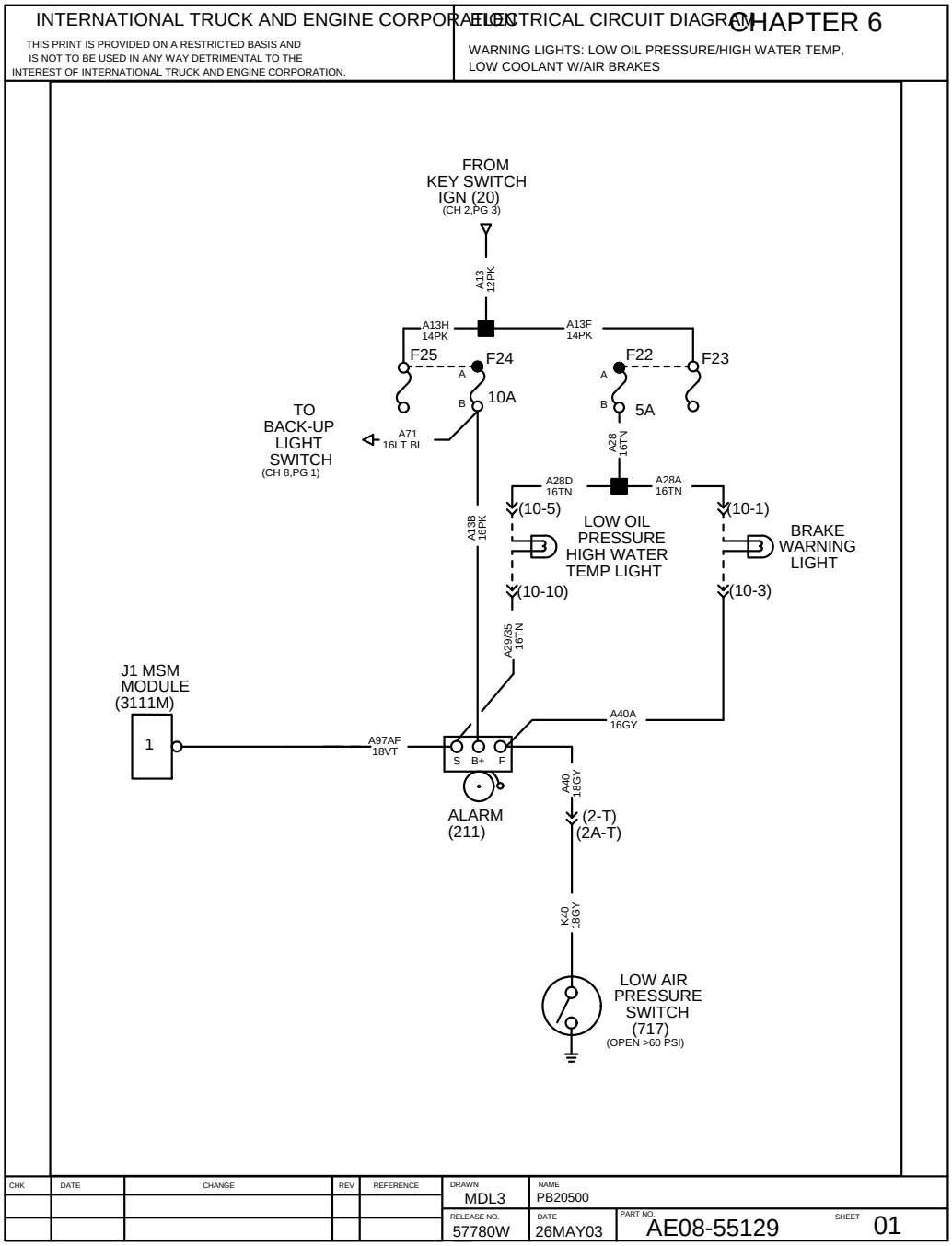

Figure 166 Low Oil Pressure/High Water Temp./Low Coolant Level/Brake Warning (Air) Lights and Alarm

Low Oil Pressure/High Water Temperature with Hydraulic Brakes, p. 2

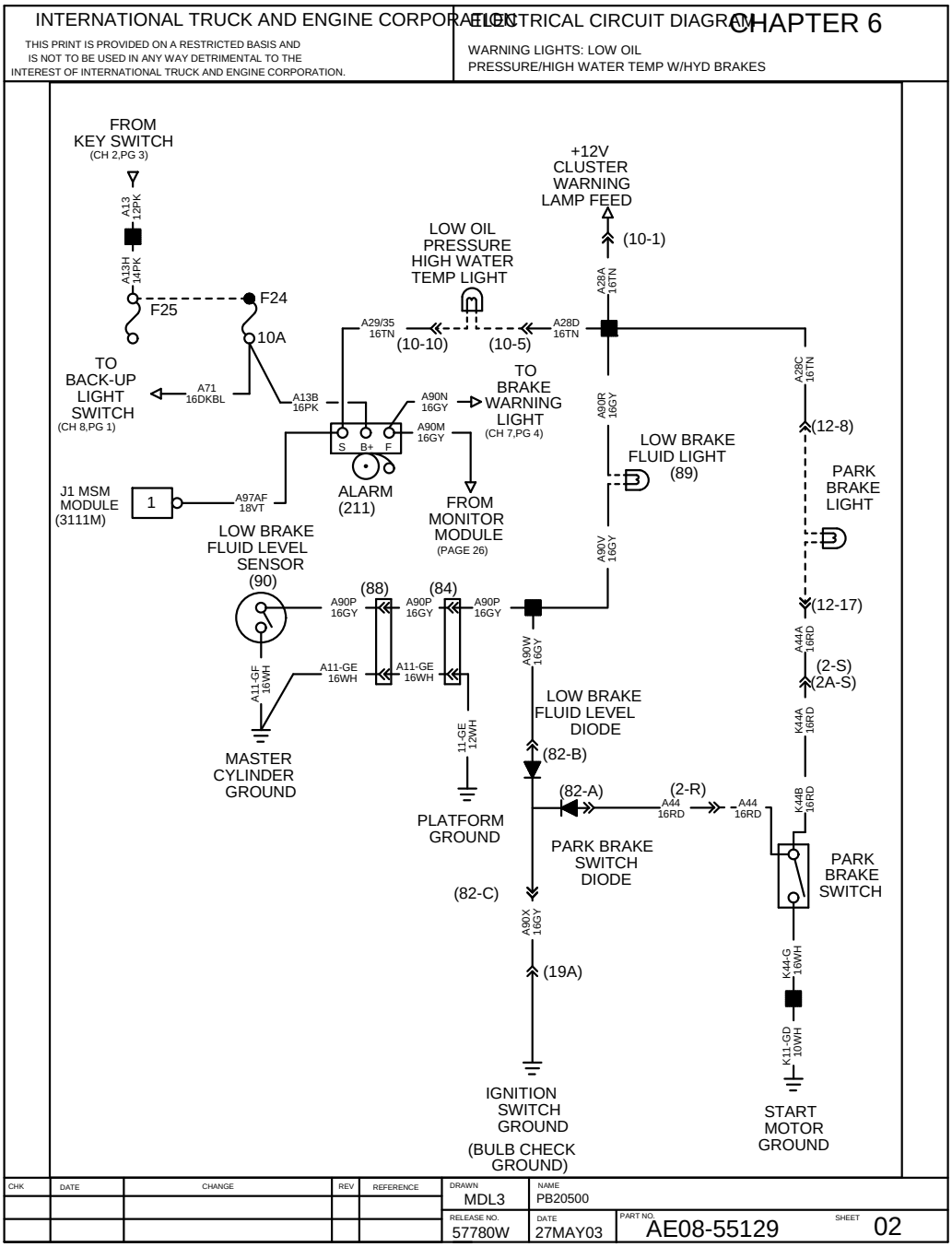

Figure 167 Low Oil Pressure/High Water Temperature with Hydraulic Brakes

Diagnostic/Programmable Connector, p. 3

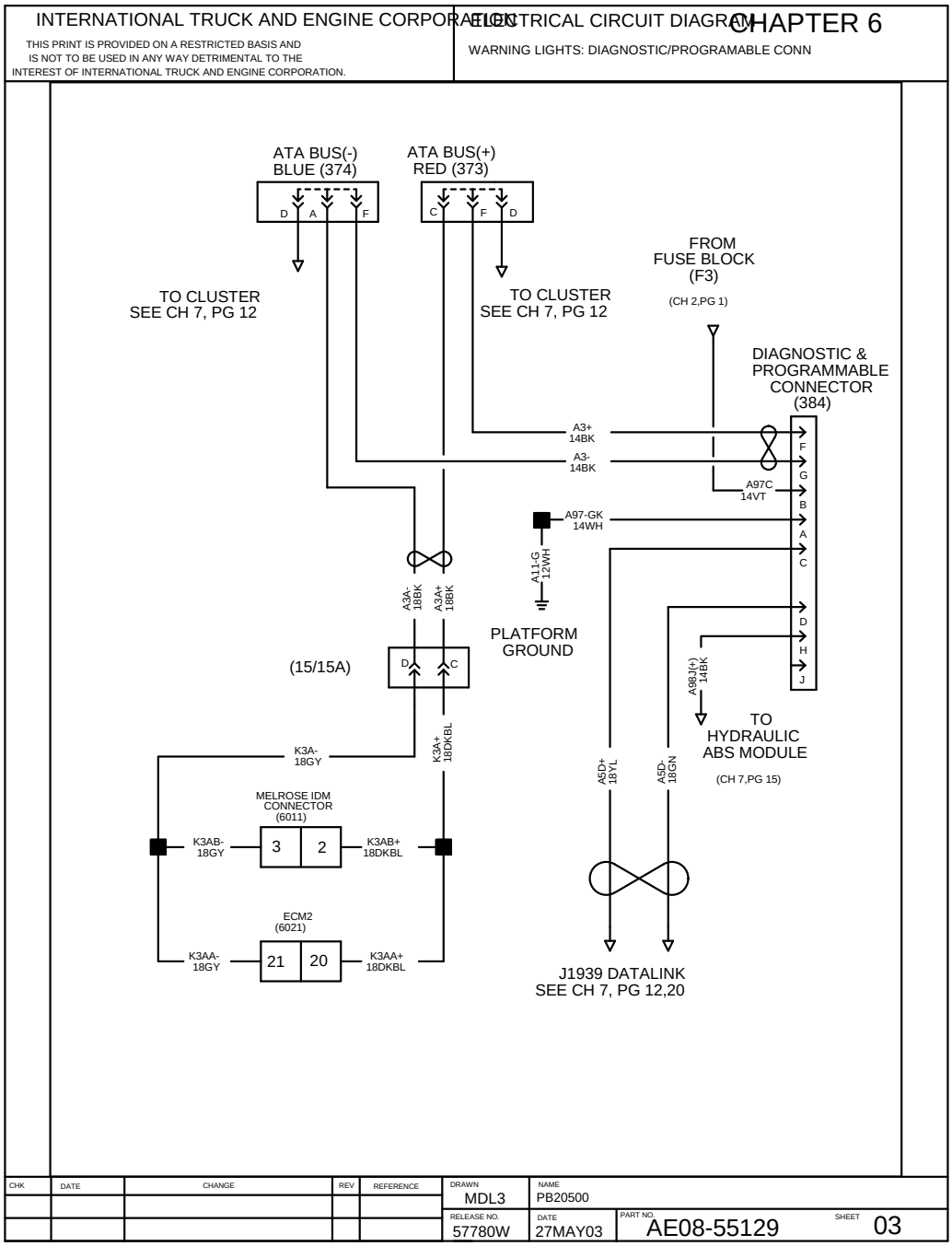

Figure 168 Diagnostic/Programmable Connector

Parking Brake and Warning Lights with Air Brakes, p. 4

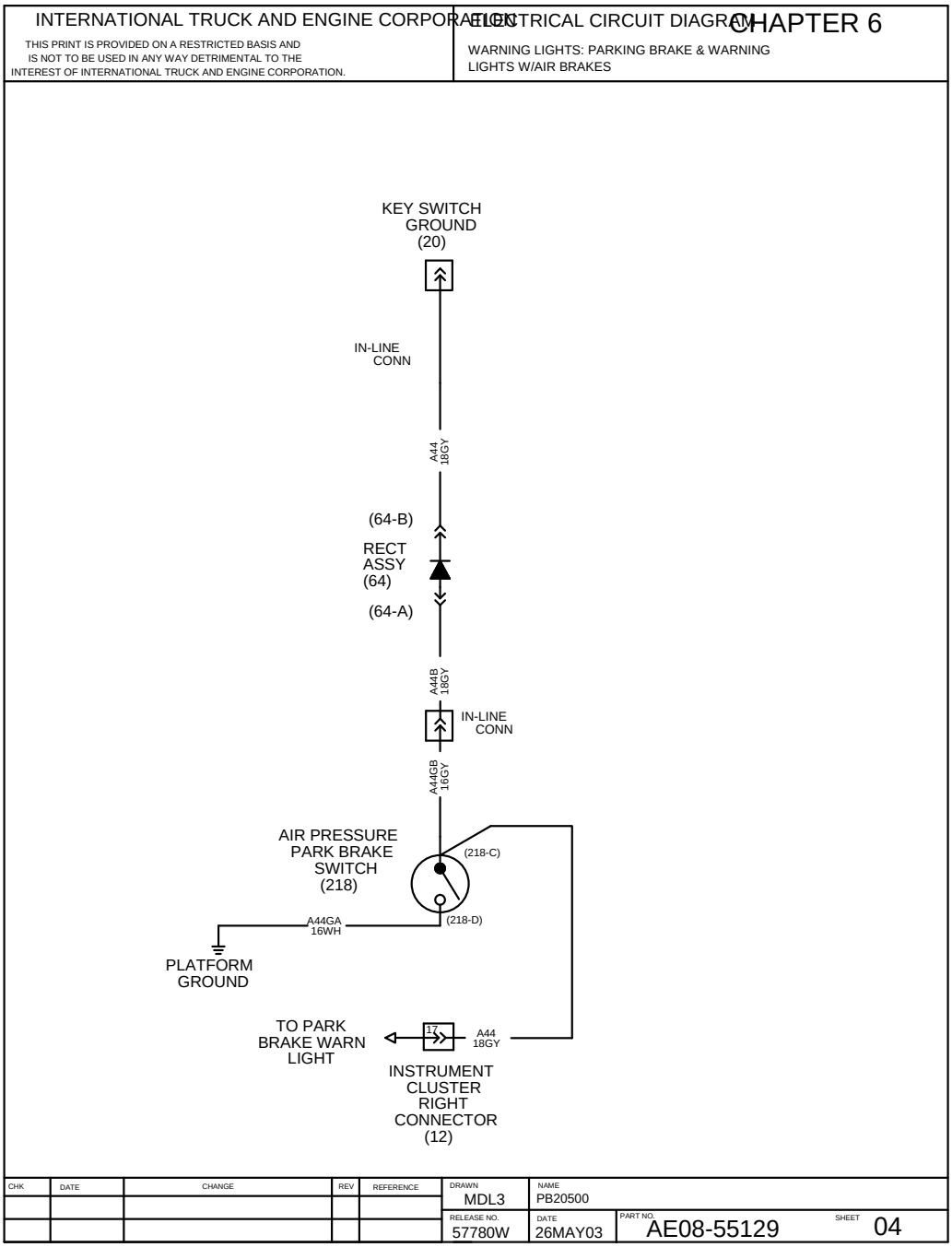

Figure 169 Parking Brake and Warning Lights with Air Brakes

Electronic Controls: MSM Module Control System, p. 5

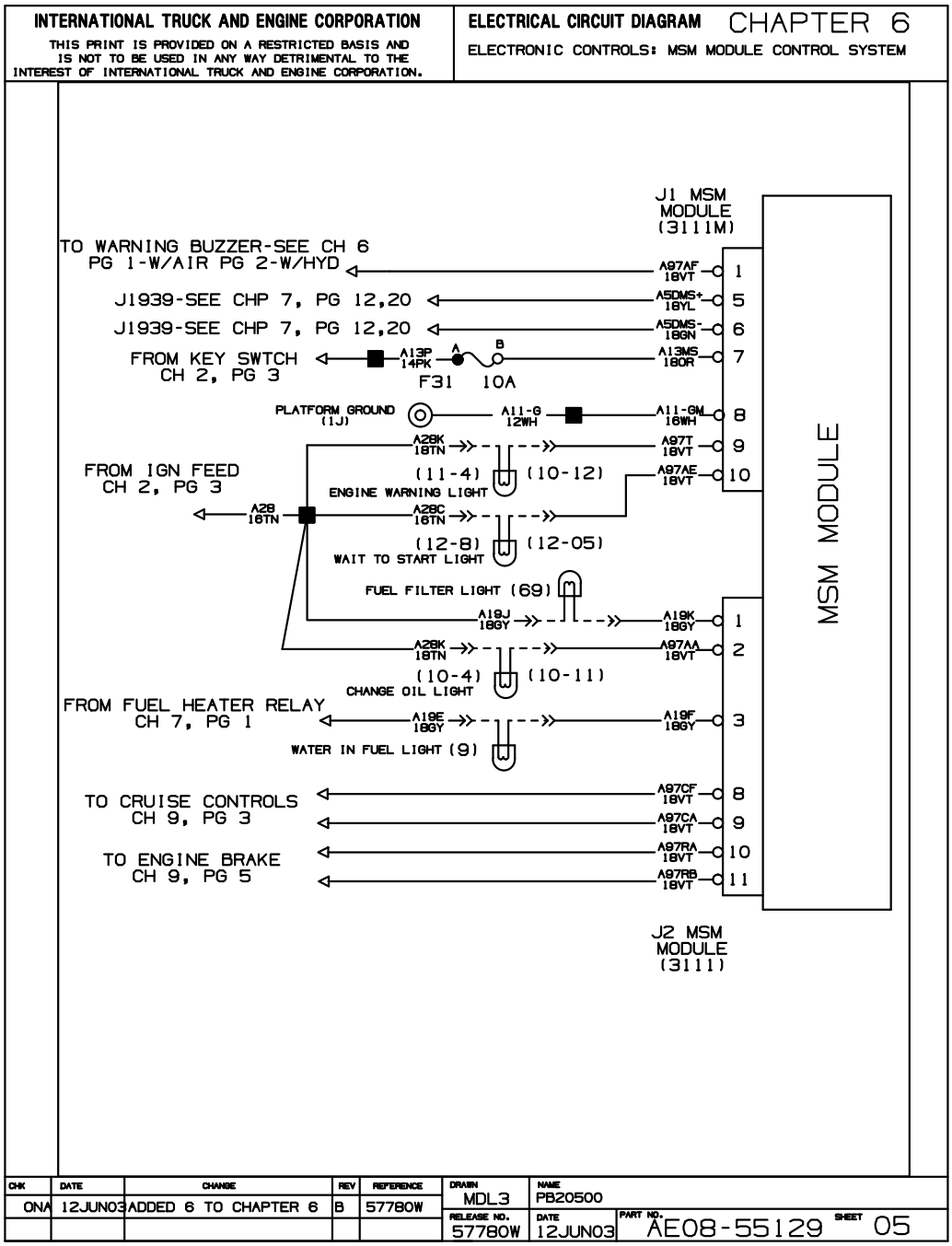

Figure 170 Electronic Controls: MSM Module Control System, p. 5

2.7. CHASSIS ACCESSORIES (CHAPTER 7)

Heated Fuel Filter, p. 1

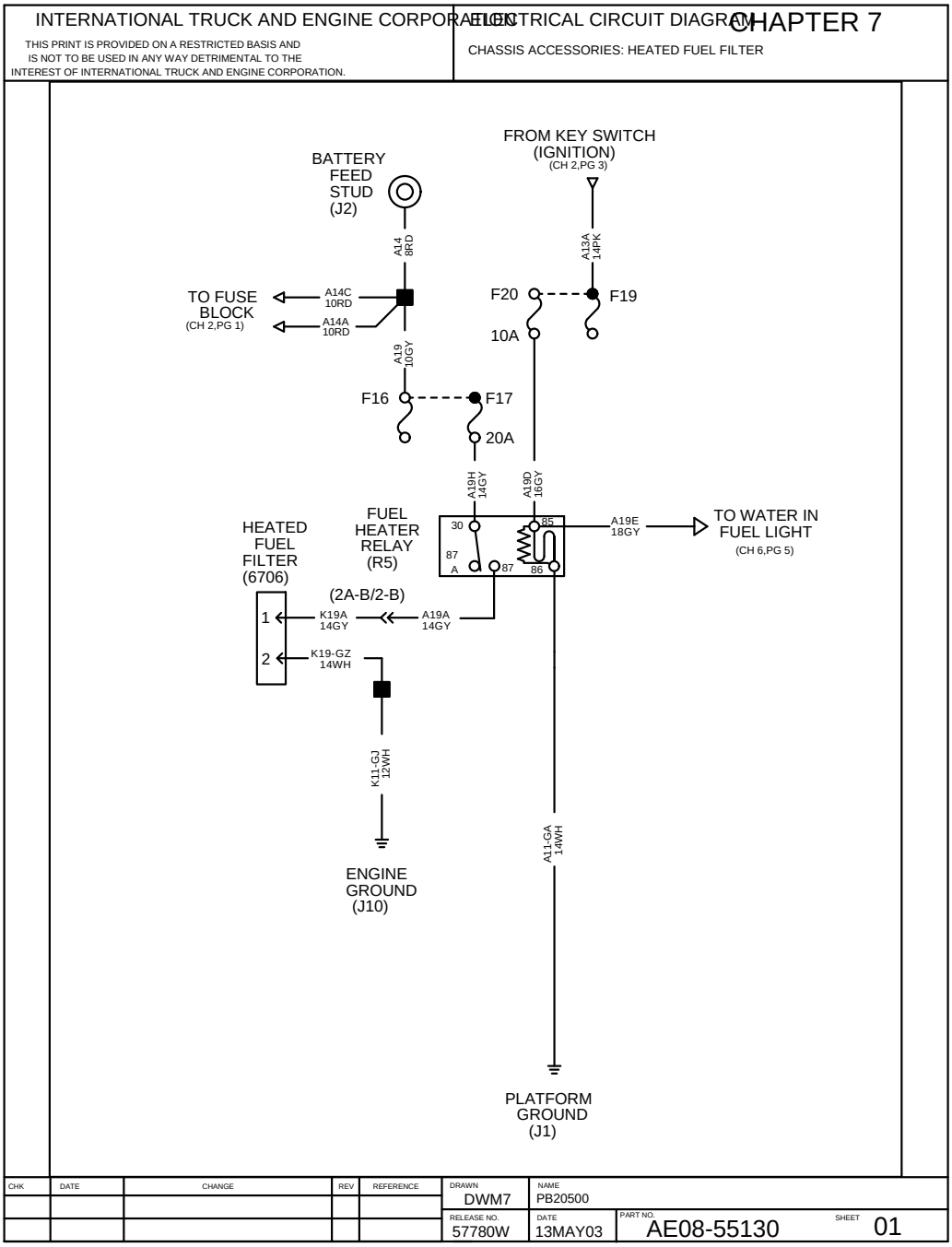

Figure 171 Heated Fuel Filter

Air Dryer/Drain Valve, p. 2

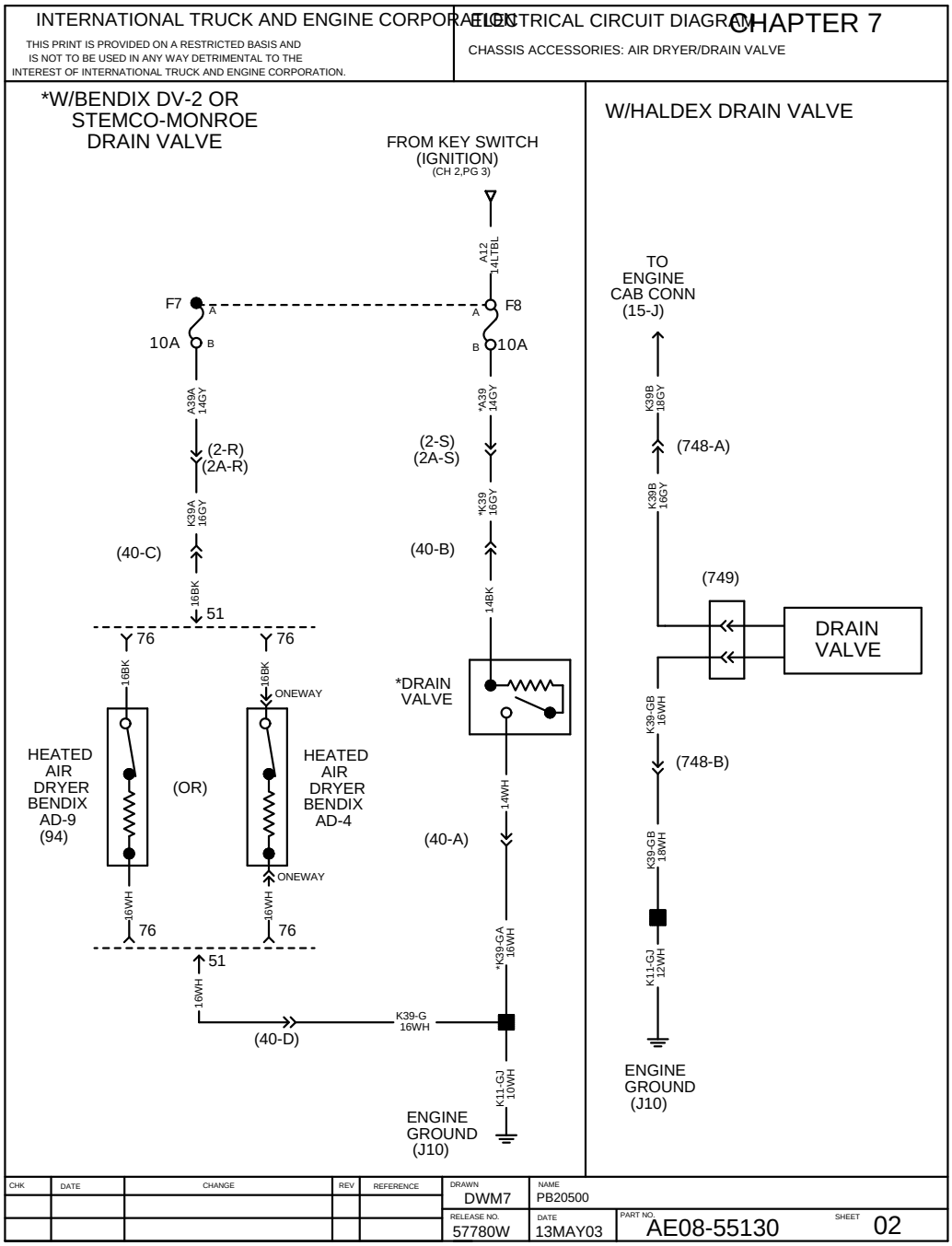

Figure 172 Air Dryer/Drain Valve

Body Builder Connections, p. 3

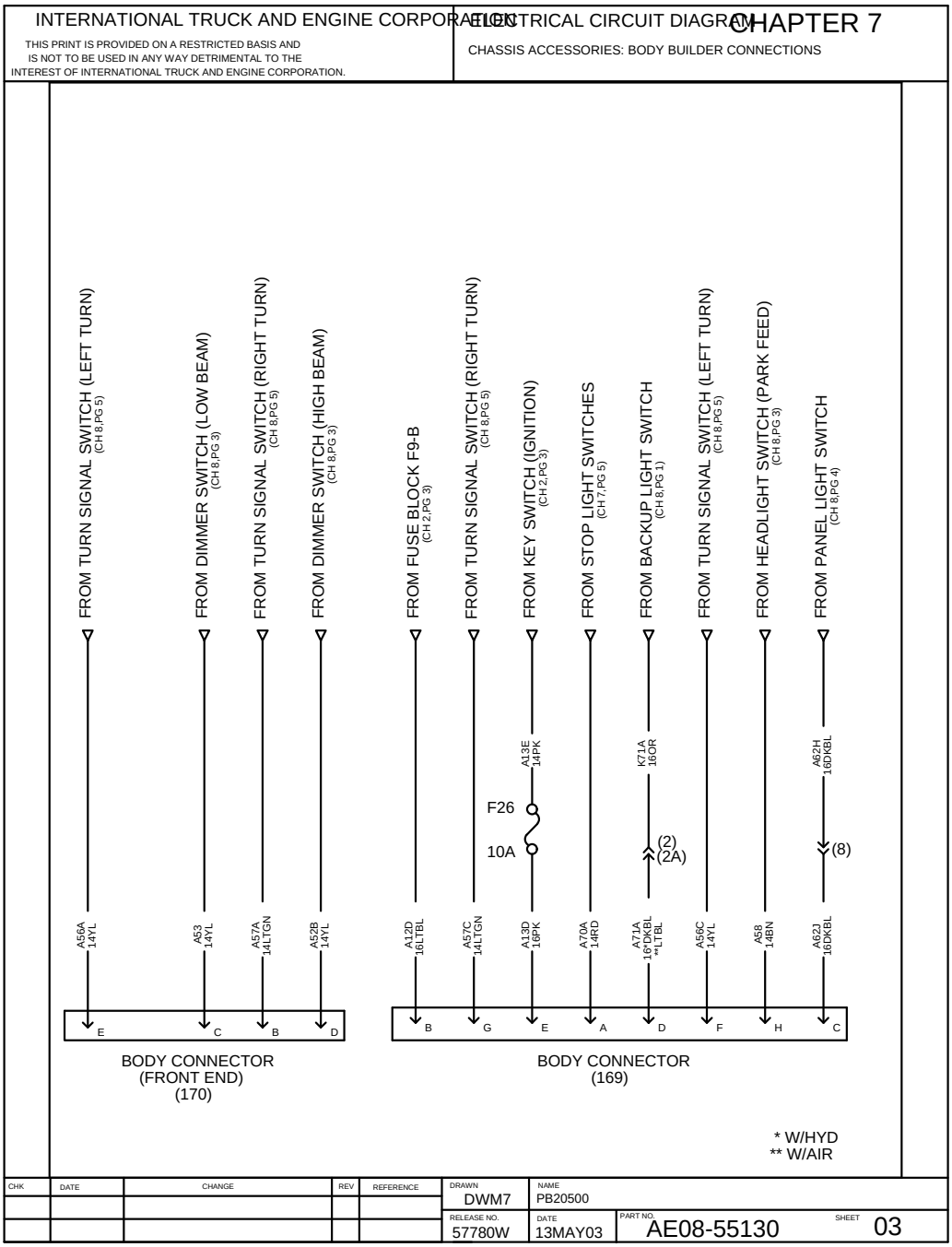

Figure 173 Body Builder Connections

Brake System Hydraulic, p. 4

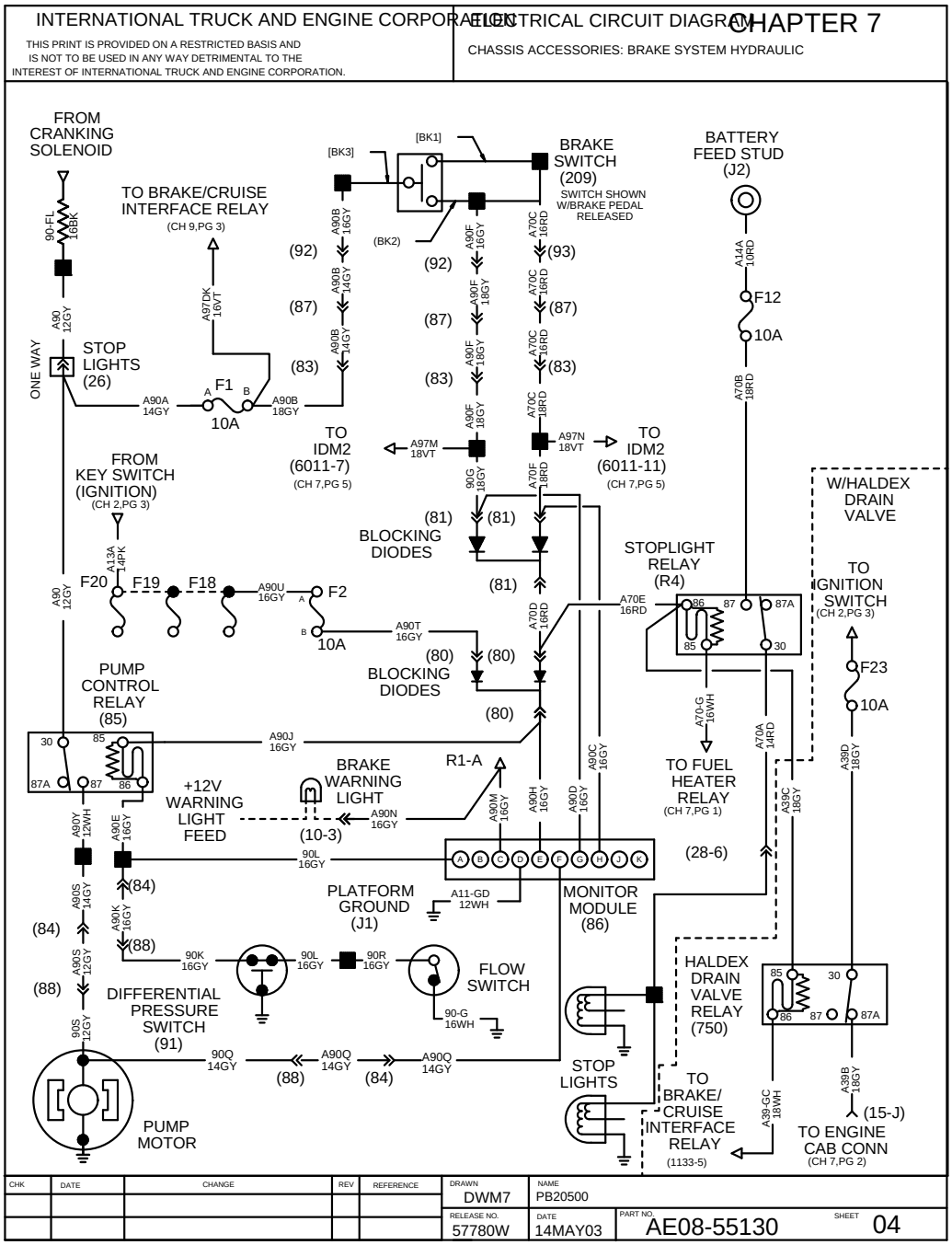

Figure 174 Brake System Hydraulic

Stoplight Switch (With Air Brake), p. 5

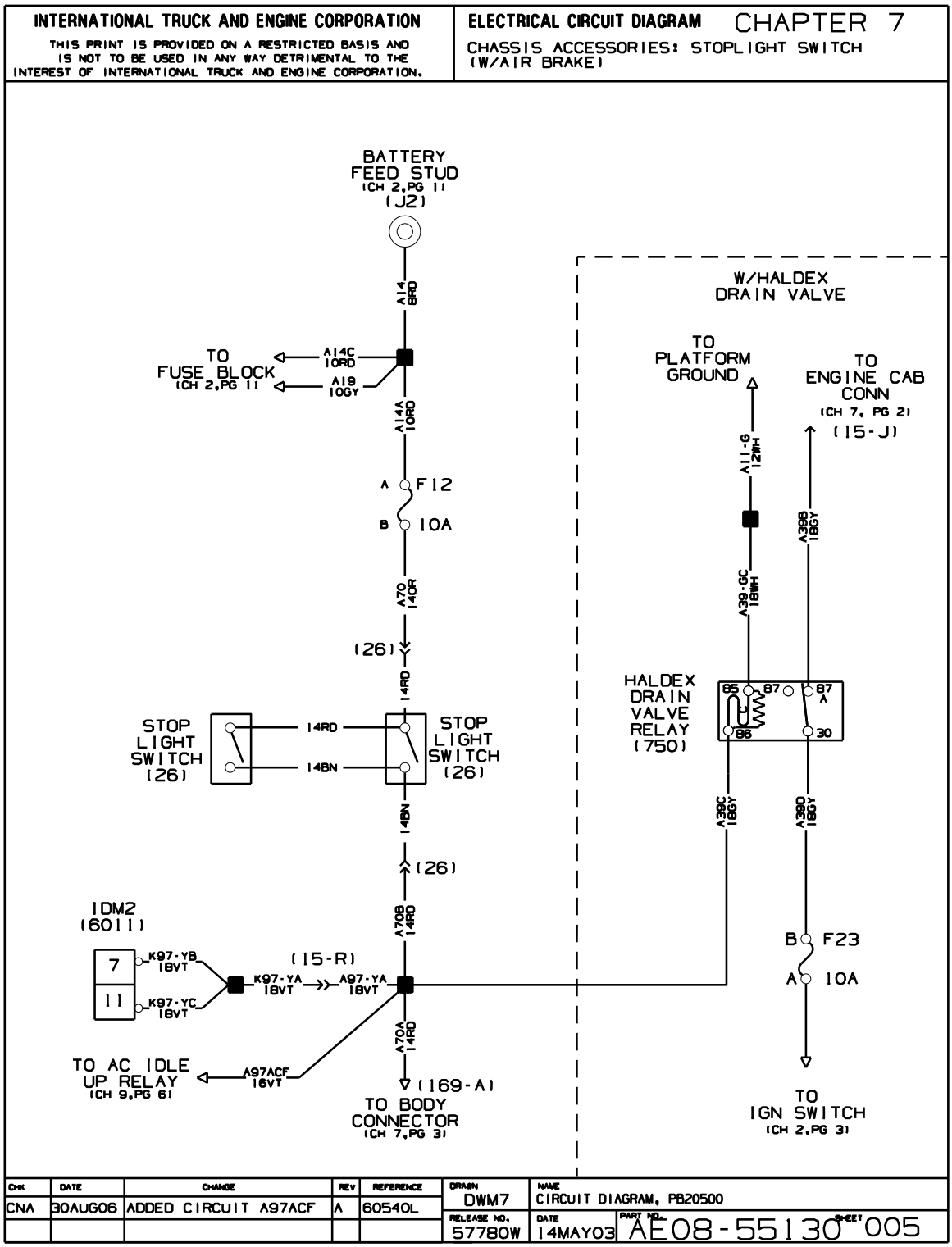

Figure 175 Stoplight Switch (With Air Brake)

Antilock Brakes (4–Channel) Allison WTEC III w/ I6 EGR and Air Brakes, p. 6

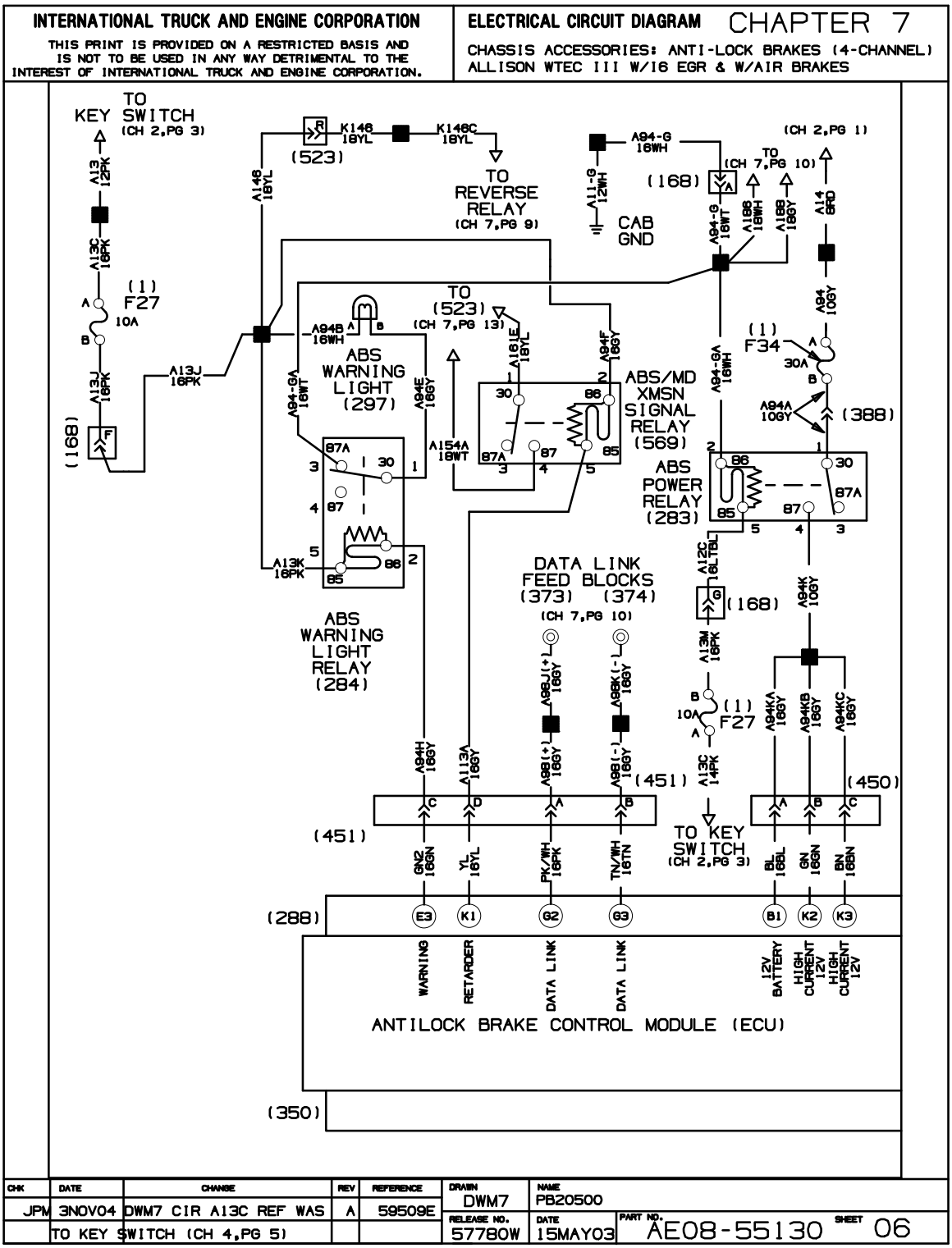

Figure 176 Antilock Brakes (4–Channel) Allison WTEC III w/ I6 EGR and Air Brakes

Antilock Brakes (4–Channel) With AT, MT, WTEC III Allison Trans., p. 7

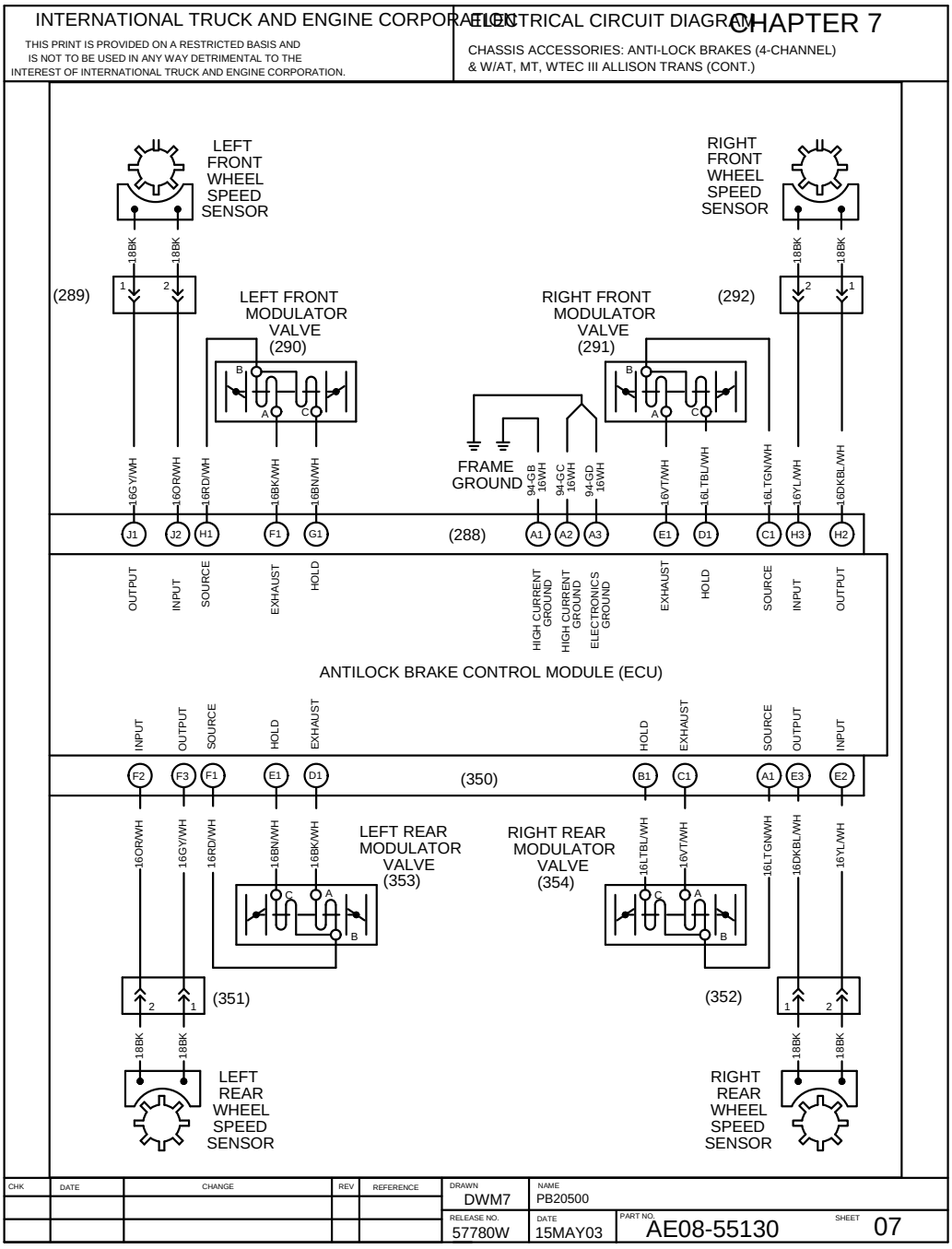

Figure 177 Antilock Brakes (4–Channel) With AT, MT, WTEC III Allison Trans.

Allison WTEC III Transmission With I6 EGR, p. 9

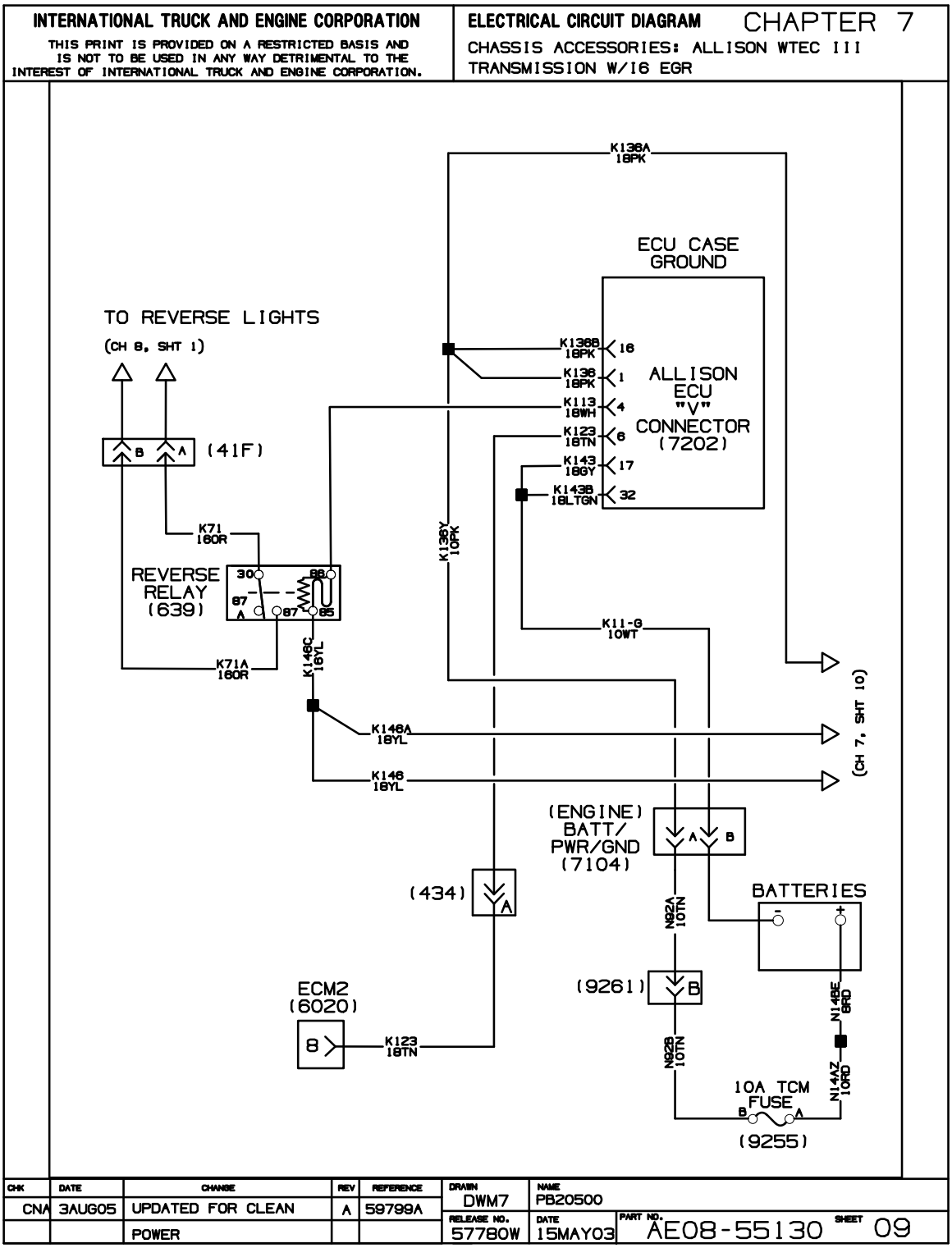

Figure 178 Allison WTEC III Transmission With I6 EGR

Allison WTEC III Transmission Electronic With I6 EGR (Cont.), p. 10

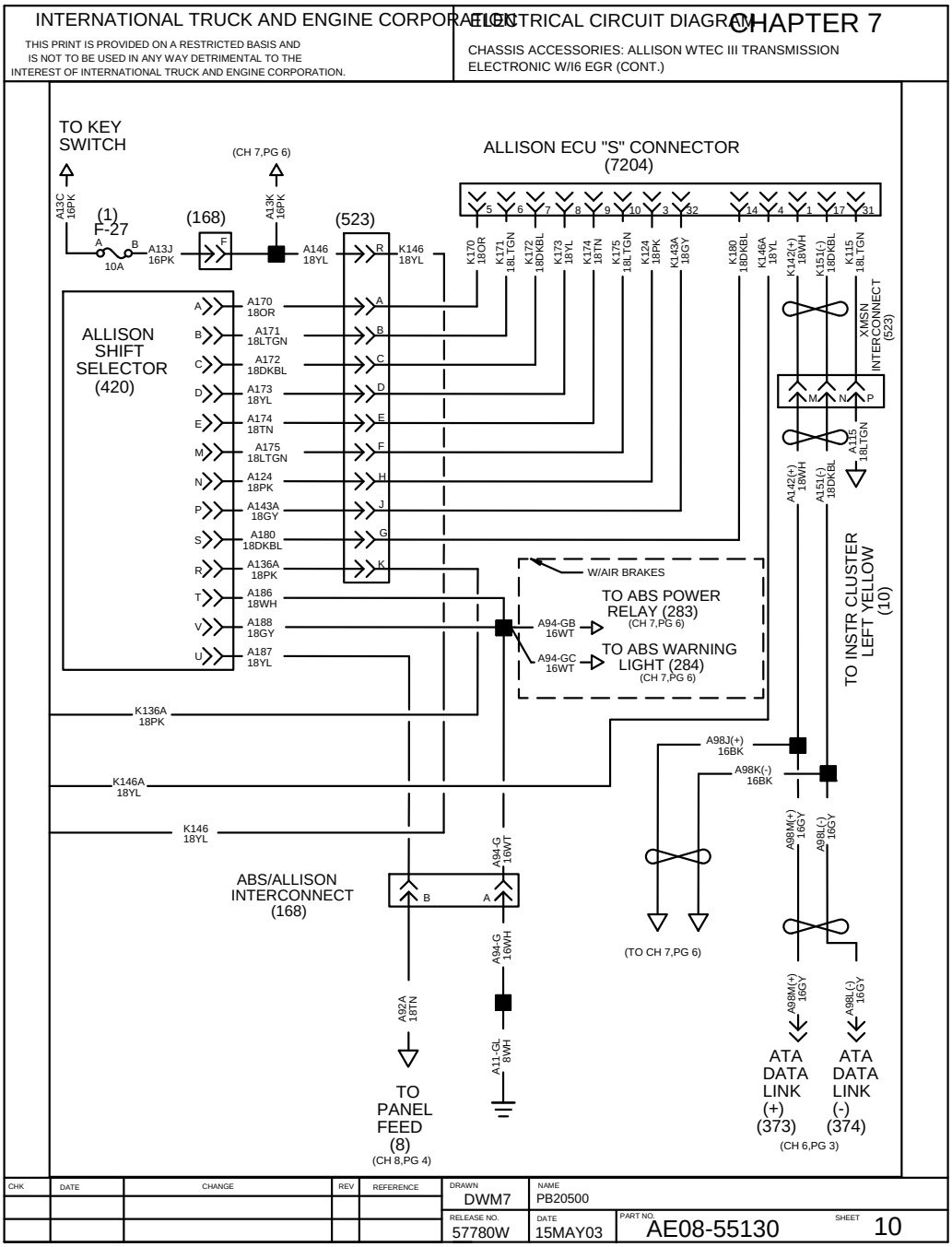

Figure 179 Allison WTEC III Transmission Electronic With I6 EGR (Cont.)

Allison WTEC III Automatic Transmission, p. 11

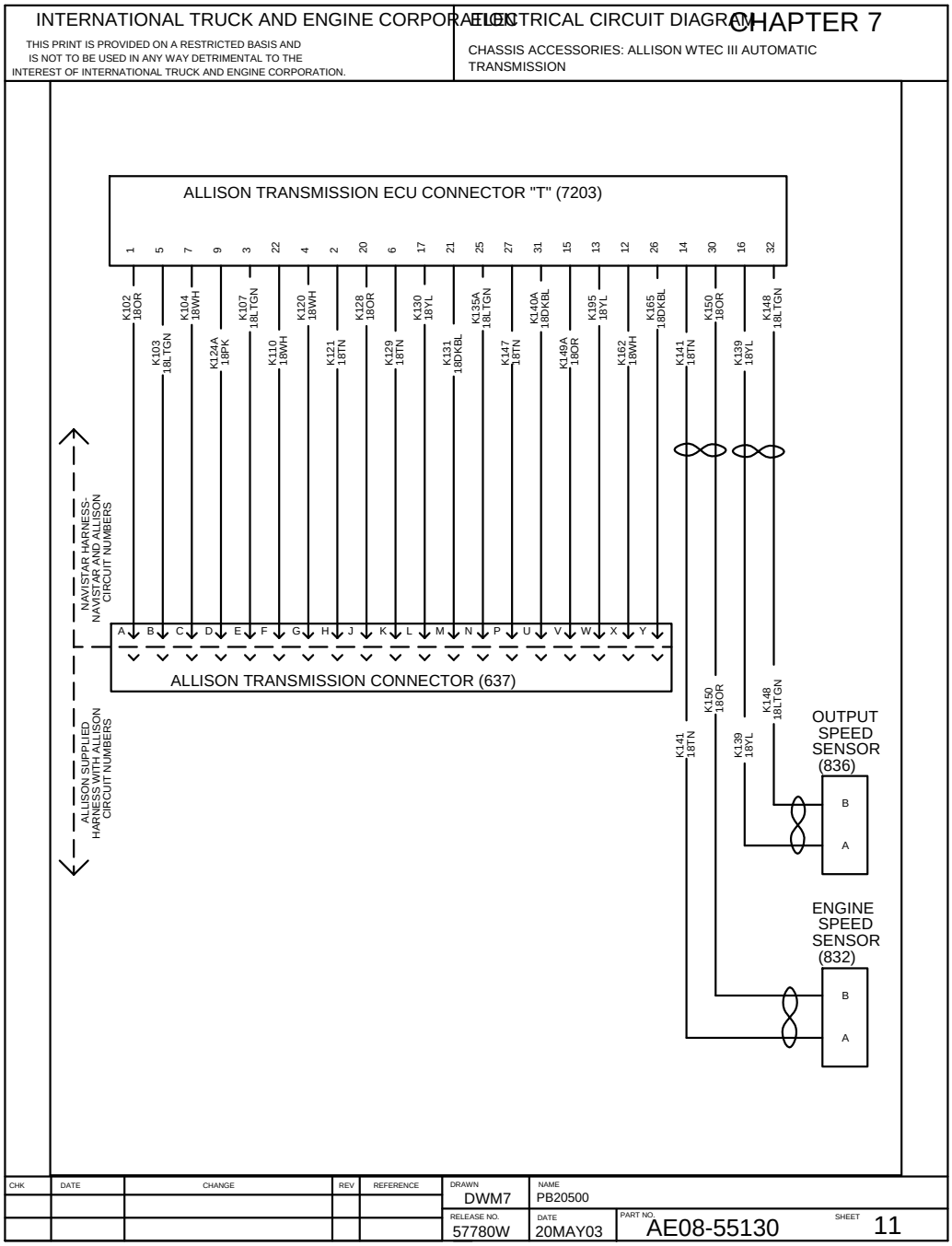

Figure 180 Allison WTEC III Automatic Transmission

J1939 Datalink w/ Allison WTEC III Transmission, p. 12

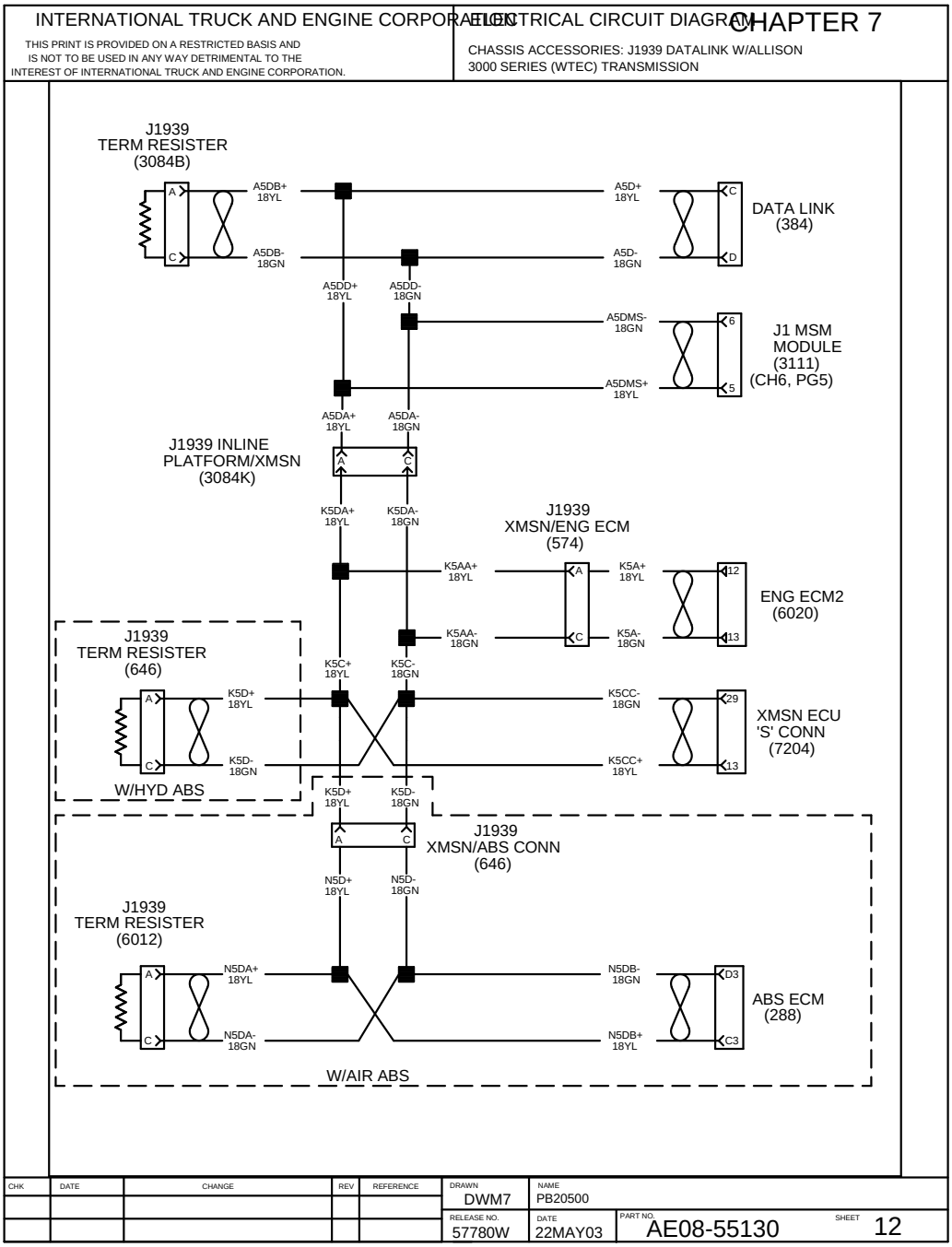

Figure 181 J1939 Datalink w/ Allison WTEC III Transmission

Allison WTEC III Transmission (Electronic) Spare Input/Outputs, p. 13

INTERNATIONAL TRUCK AND ENGINE CORPORATION

THIS PRINT IS PROVIDED ON A RESTRICTED BASIS AND IS NOT TO BE USED IN ANY WAY DETRIMENTAL TO THE INTEREST OF INTERNATIONAL TRUCK AND ENGINE CORPORATION.

ELECTRICAL CIRCUIT DIAGRAM CHAPTER 7

CHASSIS ACCESSORIES: ALLISON WTEC III XMSN (ELECTRONIC) SPARE INPUT/OUTPUTS

ALLISON (BLACK)
SPARE INPUT/OUTPUT
12-WAY DEUTCSH CONN (466)

CAVITY	ALLISON CIRCUIT NUMBER	DESCRIPTION
1	K161A	SIGNAL GROUND
2	K155	AUX. FUNCTION RANGE INHIBIT (STD)
3	K117	AUTO NEUTRAL FOR PTO (STD)
5	K118	FIRE TRUCK PUMP MODE
6	K153	AUX. HOLD
8	K167	OUTPUT SPEED INDICATOR A
9	K114	RANGE INDICATOR
12	K112	PTO ENABLE 2

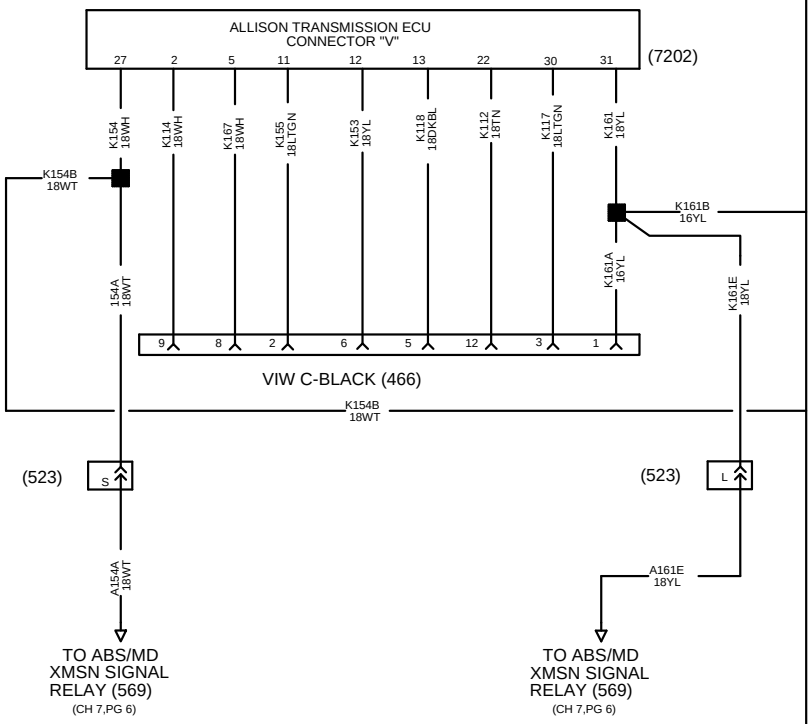

CHK	DATE	CHANGE	REV	REFERENCE	DRAWN	NAME		
					DWM7	PB20500		
					RELEASE NO. 57780W	DATE 20MAY03	PART NO. AE08-55130	SHEET 13

Figure 182 Allison WTEC III Transmission (Electronic) Spare Input/Outputs

Allison WTEC III Transmission (Electronic) Spare Input/Outputs (Cont.), p. 14

INTERNATIONAL TRUCK AND ENGINE CORPORATION

THIS PRINT IS PROVIDED ON A RESTRICTED BASIS AND IS NOT TO BE USED IN ANY WAY DETRIMENTAL TO THE INTEREST OF INTERNATIONAL TRUCK AND ENGINE CORPORATION.

ELECTRICAL CIRCUIT DIAGRAM CHAPTER 7

CHASSIS ACCESSORIES: ALLISON WTEC III XMSN (ELECTRONIC) SPARE INPUT/OUTPUTS

ALLISON (GRAY)
SPARE INPUT/OUTPUT
12-WAY DEUTCSH CONN (499)

CAVITY	ALLISON CIRCUIT NUMBER	DESCRIPTION
1	K161B	SIGNAL GROUND
2	K163	RETARDER ENABLE
3	K169	ENGINE BRAKE / PRESELECT
4	K125	RETARDER INDICATOR
7	K119	GENERAL PURPOSE INPUT
8	K154B	GENERAL PURPOSE INPUT
9	K105	SUMP/RETARDER TEMP INDICATOR
12	K137	SERVICE BRAKE STATUS

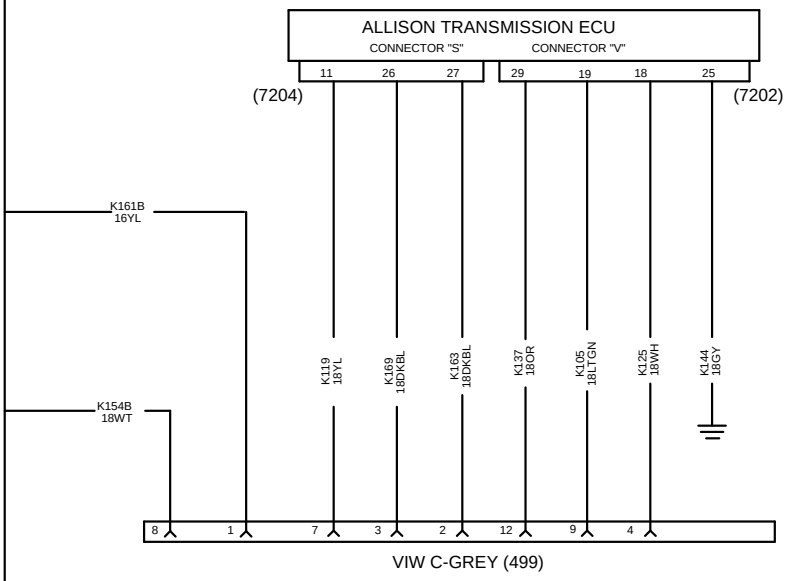

CHK	DATE	CHANGE	REV	REFERENCE	DRAWN DWM7	NAME PB20500		
					RELEASE NO. 57780W	DATE 20MAY03	PART NO. AE08-55130	SHEET 14

Figure 183 Allison WTEC III Automatic Transmission (Electronic) Spare Input/Outputs (Cont.)

Antilock Brake System — Hydraulic, p. 15

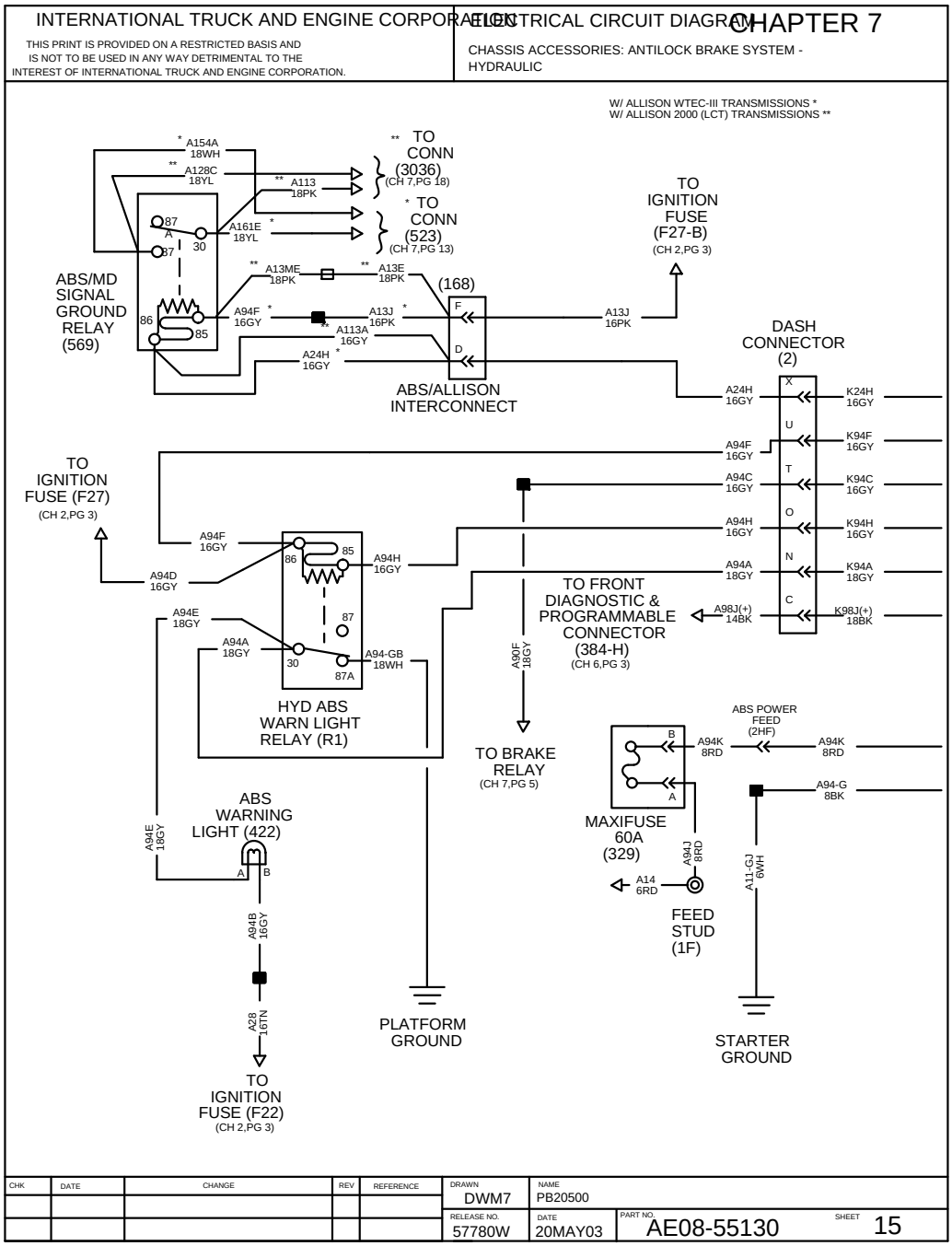

Figure 184 Antilock Brake System — Hydraulic

Antilock Brake System — Hydraulic (Cont.), p. 16

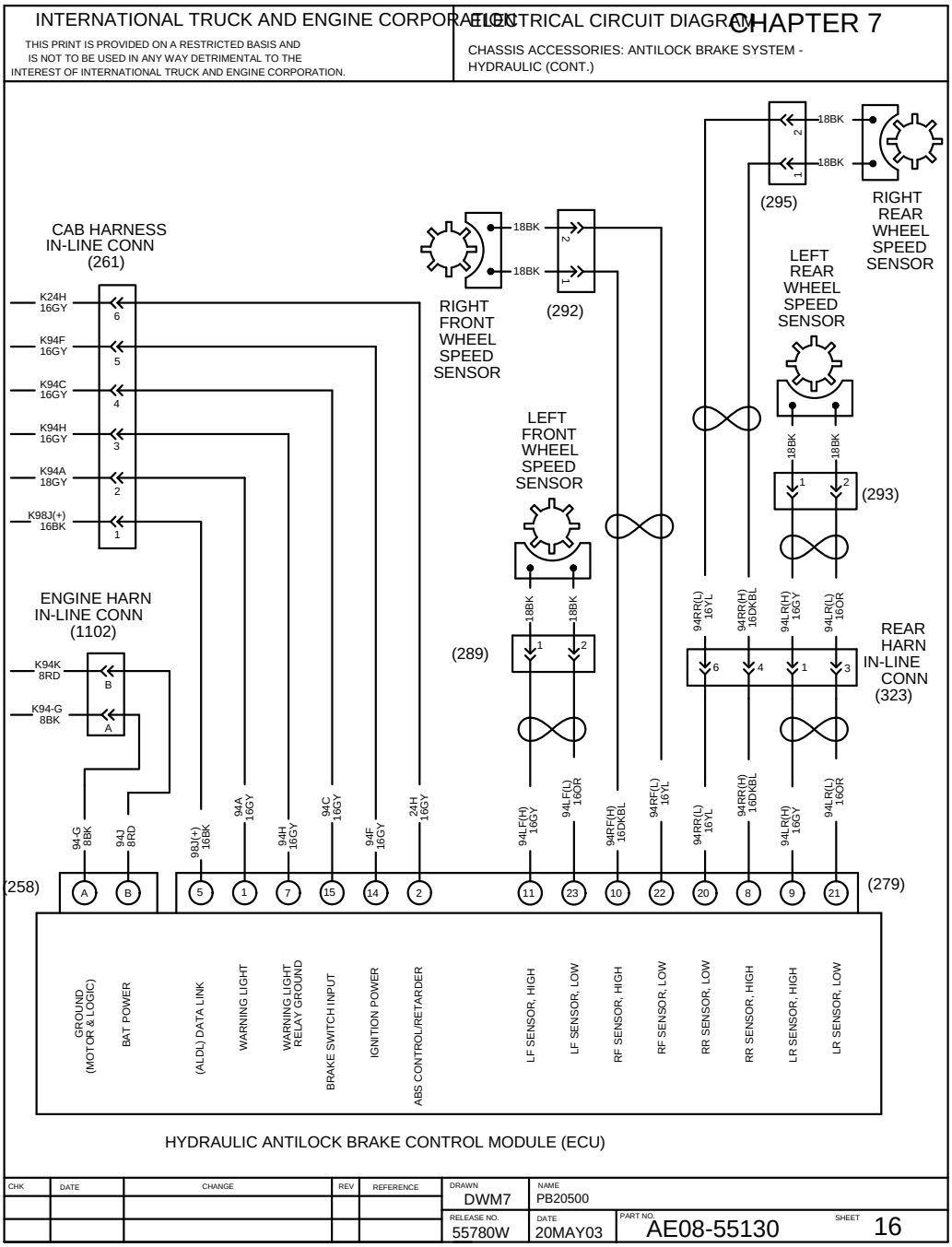

Figure 185 Antilock Brake System — Hydraulic (Cont.)

Antilock Brakes (4–Channel) W/ I6 EGR and W/Air Brakes W/Allison 2000 LCT Xmsn, p. 17

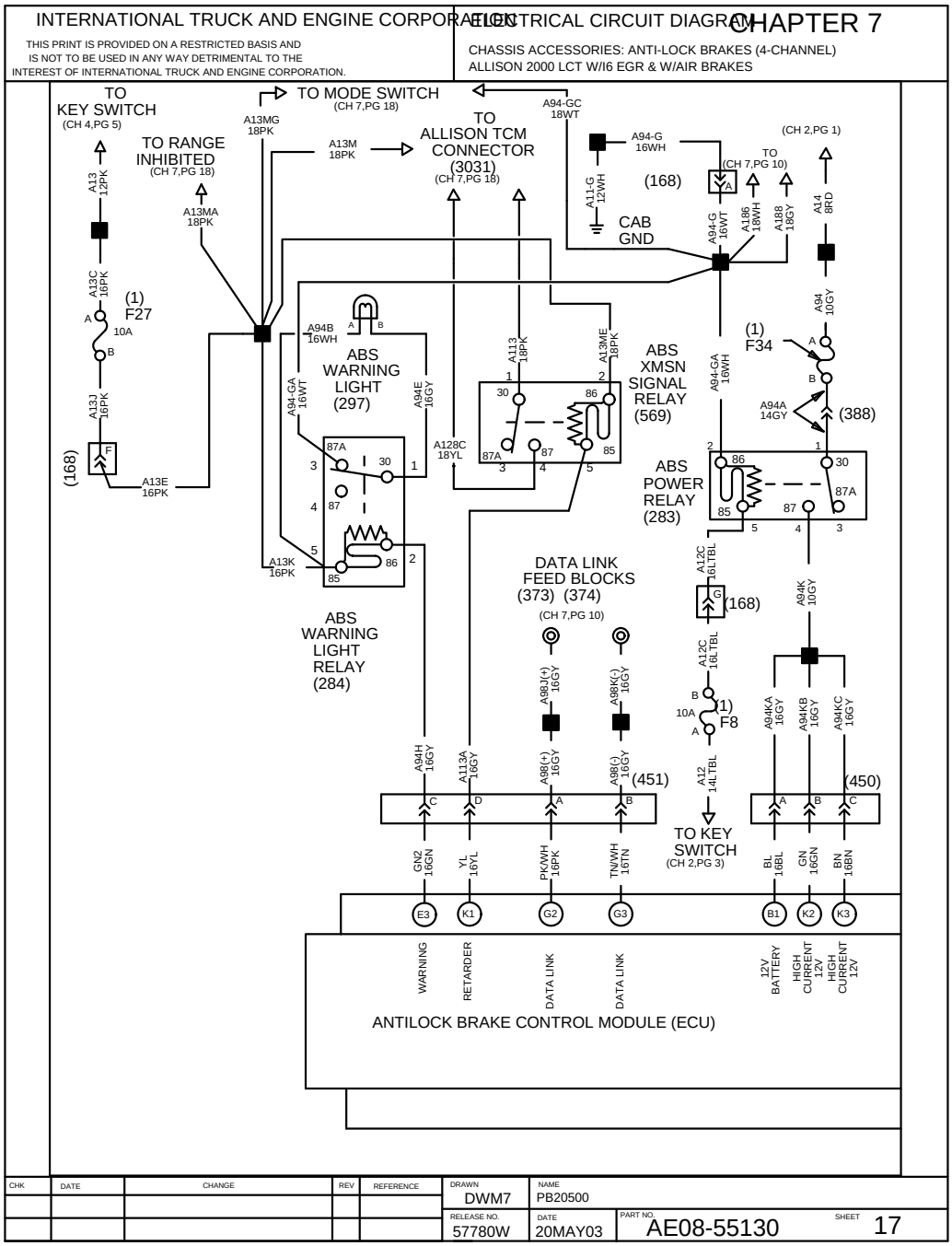

Figure 186 Antilock Brakes (4–Channel) W/ I6 EGR and W/Air Brakes W/Allison 2000 LCT Xmsn

Allison 2000 (LCT) Transmission W/ I6 EGR, p. 18

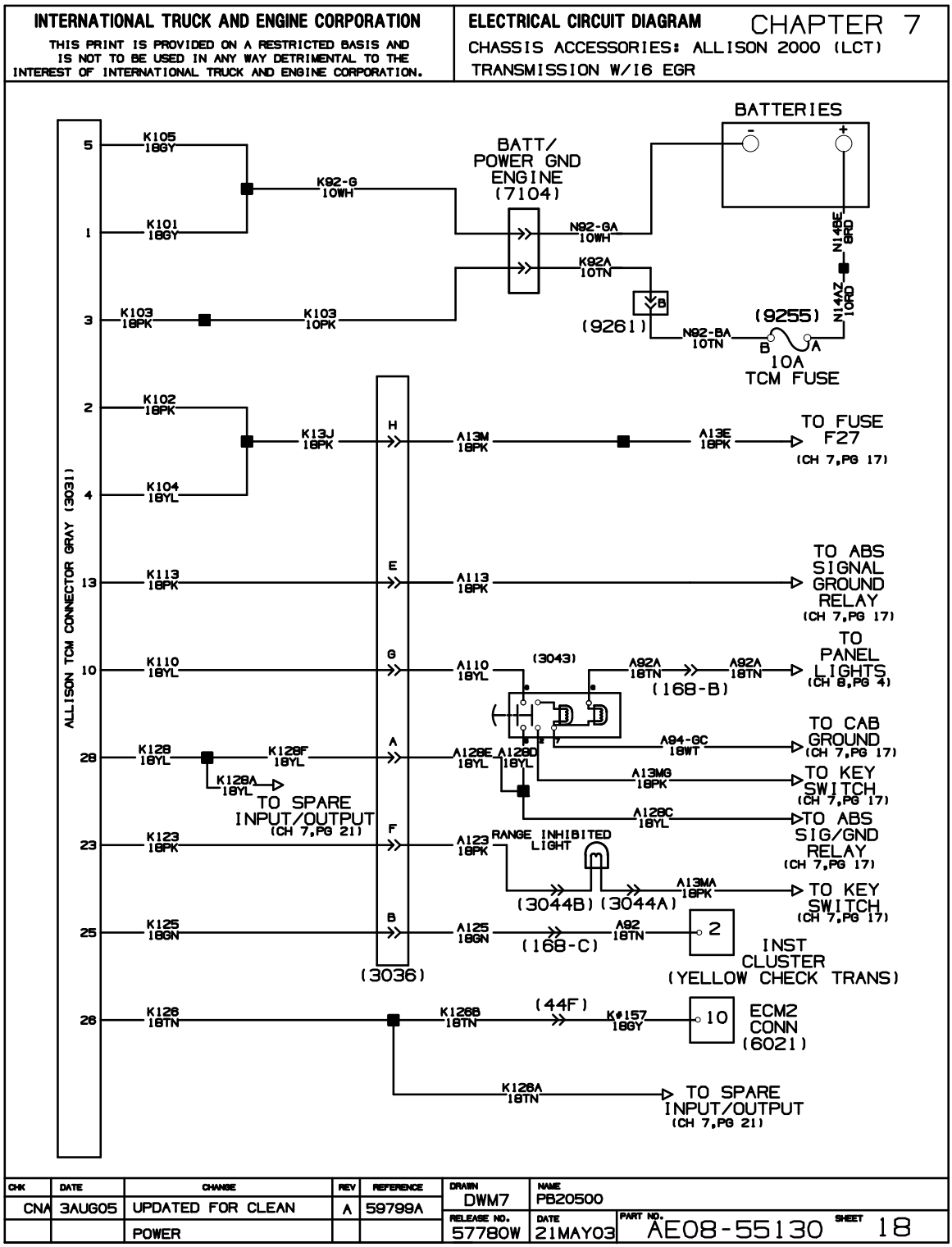

Figure 187 Allison 2000 (LCT) Transmission W/ I6 EGR

Allison 2000 (LCT) Transmission W/ I6 EGR, p. 19

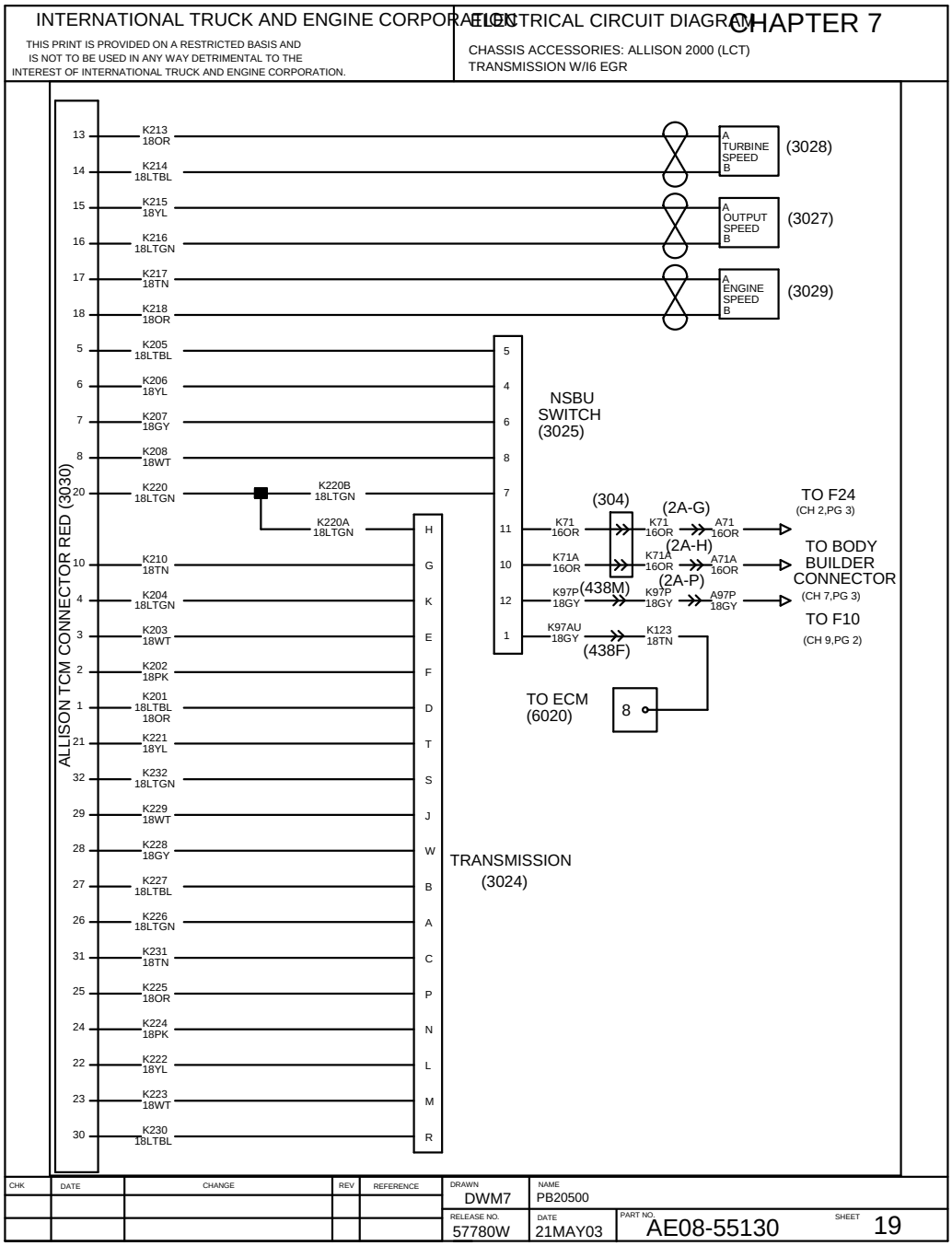

Figure 188 Allison 2000 (LCT) Transmission W/ I6 EGR

J1939 Datalink with Allison 2000 (LCT) Transmission, p. 20

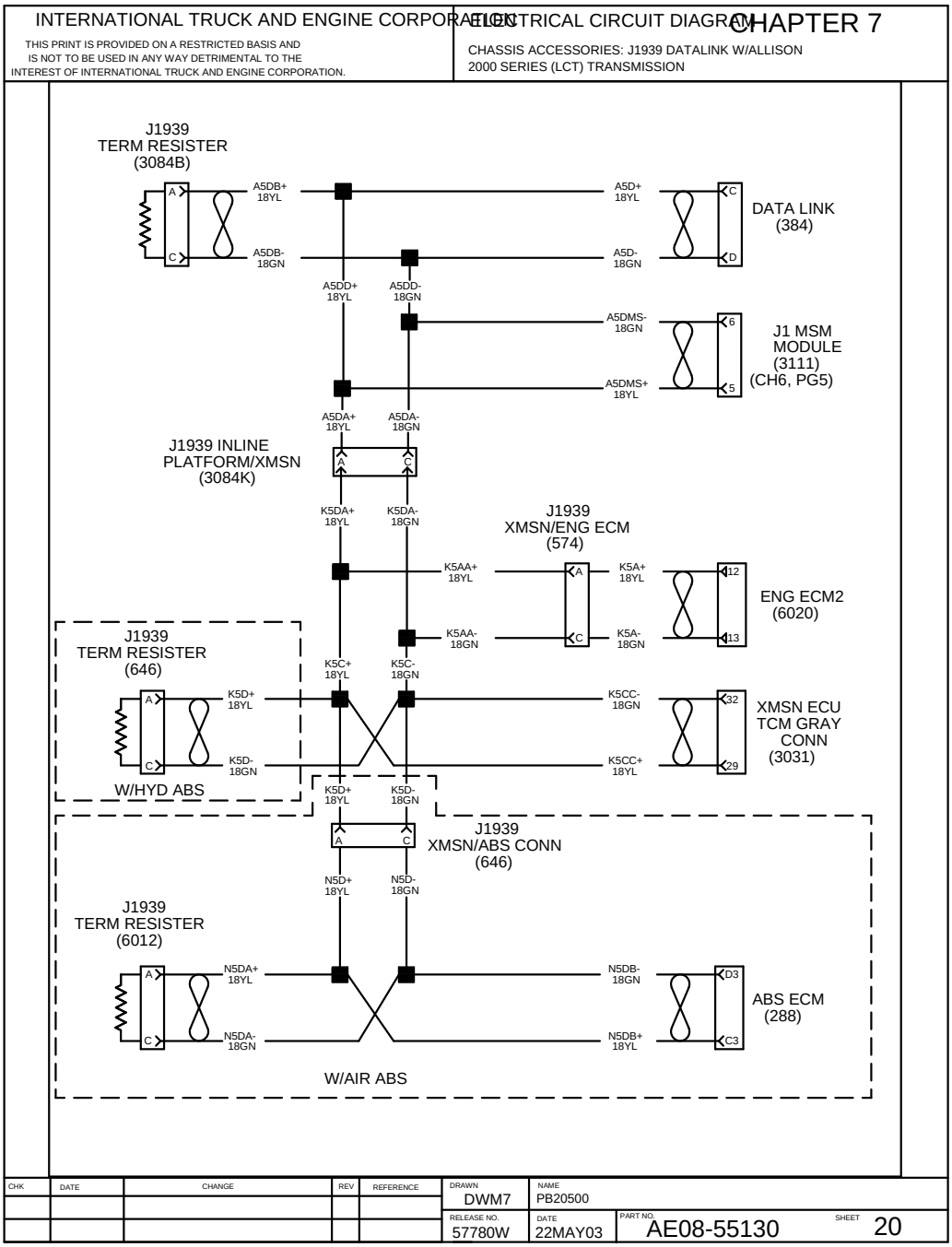

Figure 189 J1939 Datalink with Allison 2000 (LCT) Transmission

Allison 2000 (LCT) Transmission, p. 21

INTERNATIONAL TRUCK AND ENGINE CORPORATION

THIS PRINT IS PROVIDED ON A RESTRICTED BASIS AND IS NOT TO BE USED IN ANY WAY DETRIMENTAL TO THE INTEREST OF INTERNATIONAL TRUCK AND ENGINE CORPORATION.

ELECTRICAL CIRCUIT DIAGRAM CHAPTER 7

CHASSIS ACCESSORIES: ALLISON 2000 (LCT) XMSN

ALLISON 2000 (LCT)
SPARE INPUT/OUTPUT
(3032)

CAVITY	ALLISON CIRCUIT NUMBER	DESCRIPTION
1	K128A	SIGNAL RETURN
3	K106	PTO ENABLE (INPUT)
4	K119	PTO ENABLE (OUTPUT)
5	K126A	NONE ZERO CROSSING SPEEDO
6	K111	AUX. RANGE INHIBIT INPUT

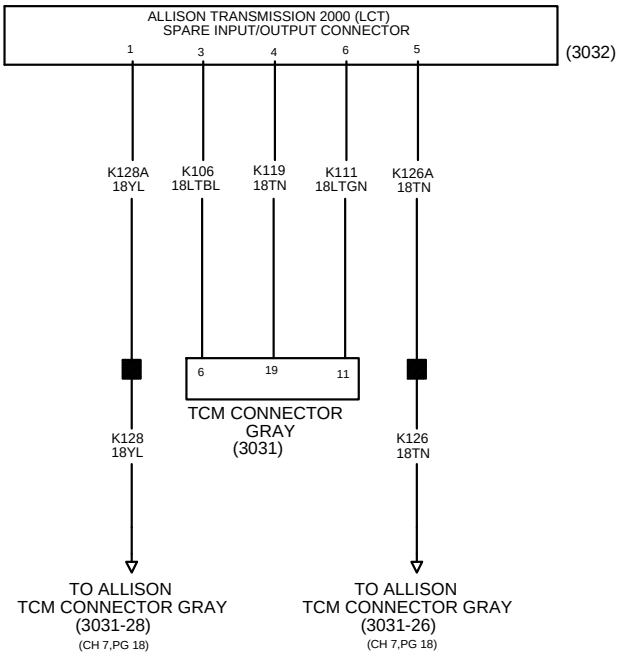

CHK	DATE	CHANGE	REV	REFERENCE	DRAWN	NAME		
					DWM7	PB20500		
					RELEASE NO. 57780W	DATE 22MAY03	PART NO. AE08-55130	SHEET 21

Figure 190 Allison 2000 (LCT) Transmission

J1708 Datalink with Allison 3000 (WTEC) Transmission, p. 22

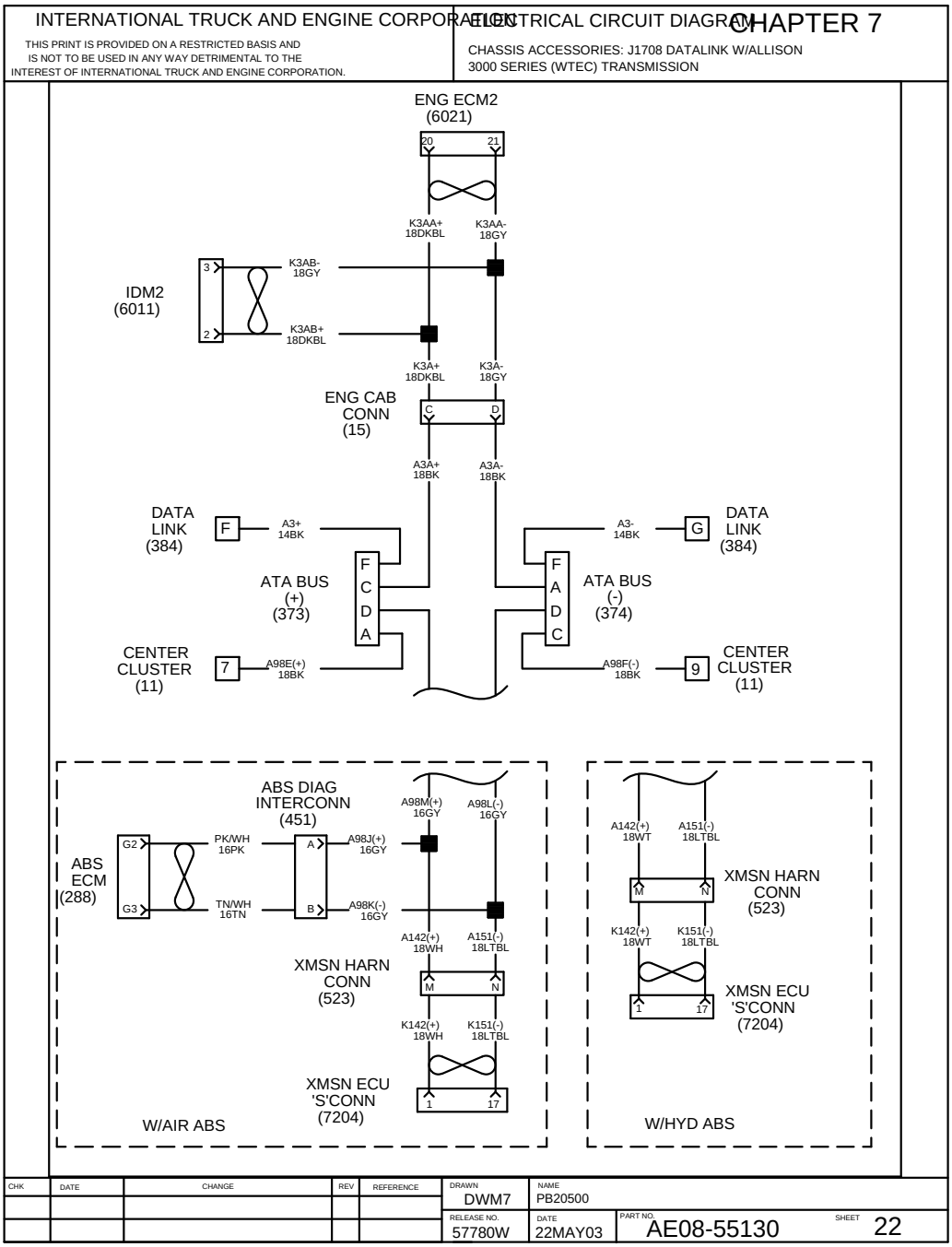

Figure 191 J1708 Datalink with Allison 3000 (WTEC) Transmission

J1708 Datalink with Allison 2000 (LCT) Transmission, p. 23

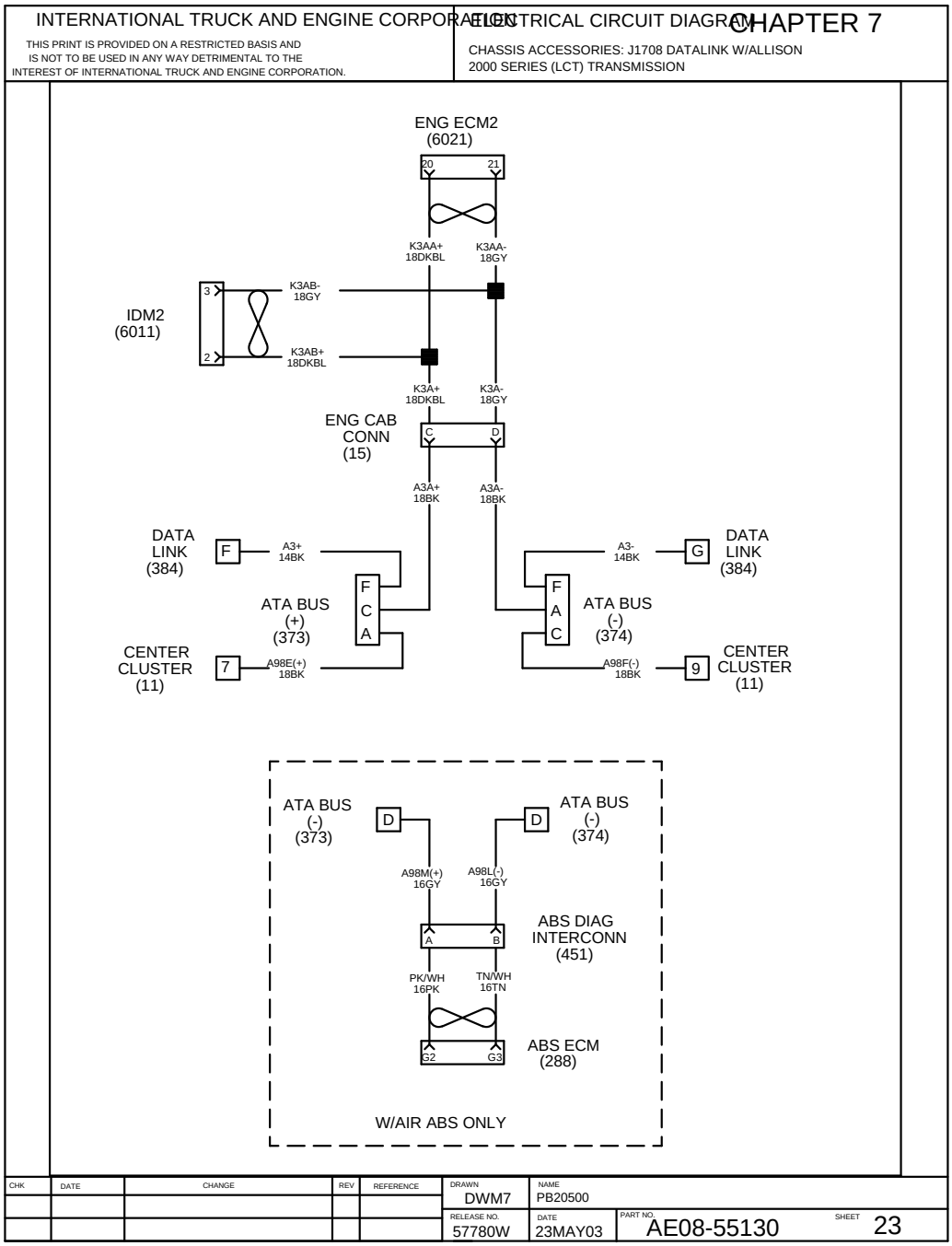

Figure 192 J1708 Datalink with Allison 2000 (LCT) Transmission

Park Brake Lift Interlock, p. 24

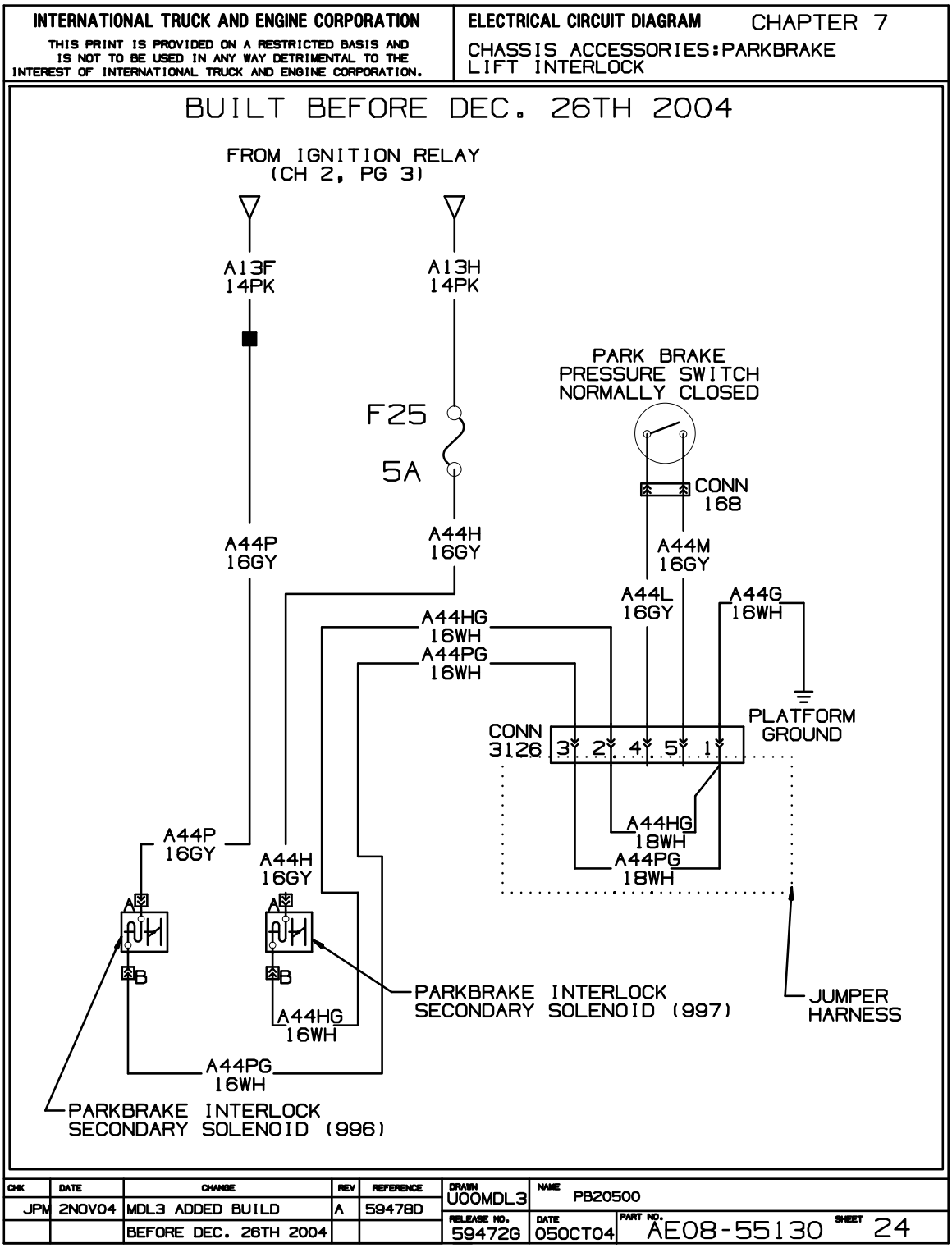

Figure 193 Park Brake Lift Interlock

Park Brake Lift Interlock, p. 25

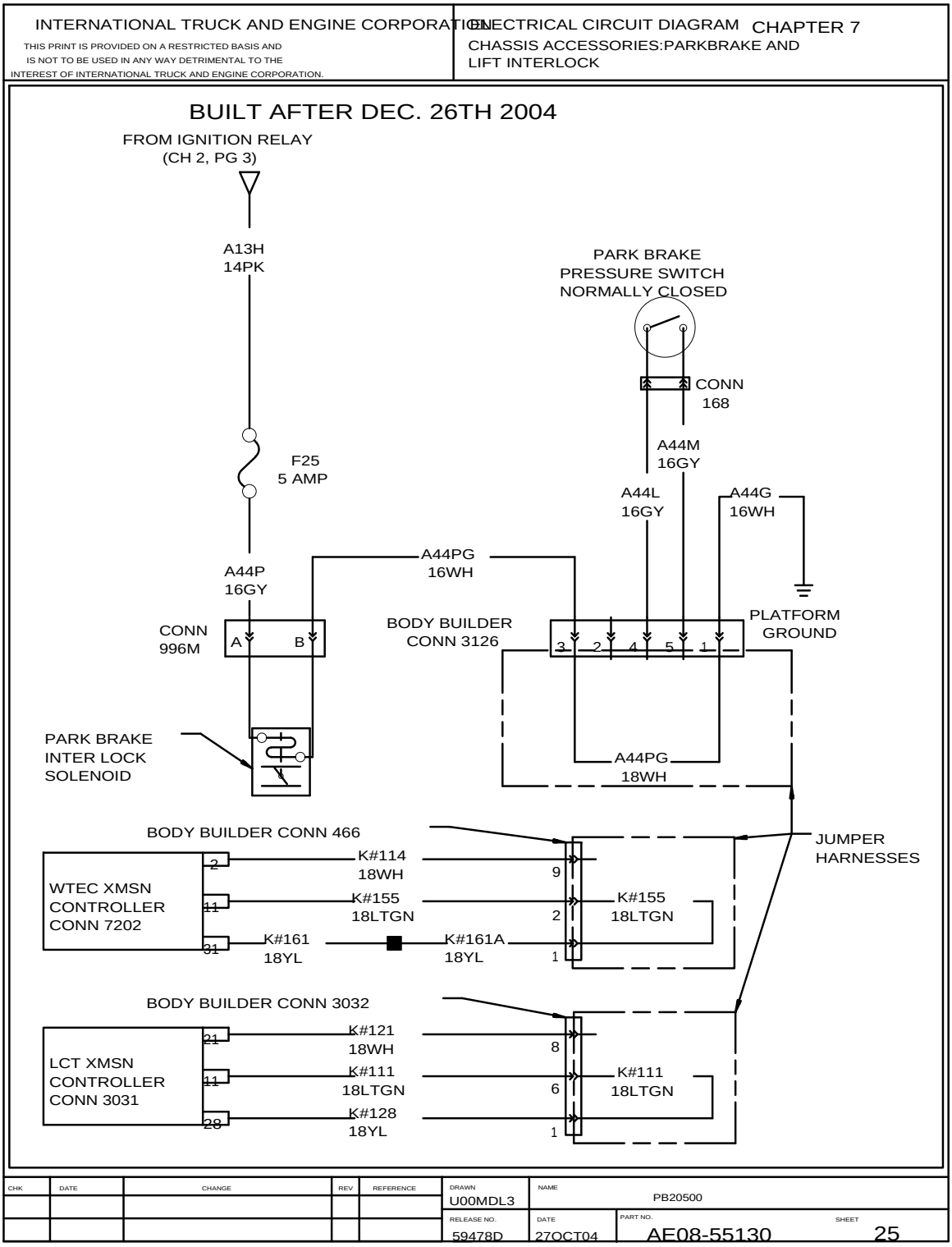

Figure 194 Park Brake Lift Interlock

ABS6 — Bendix Air, p. 26

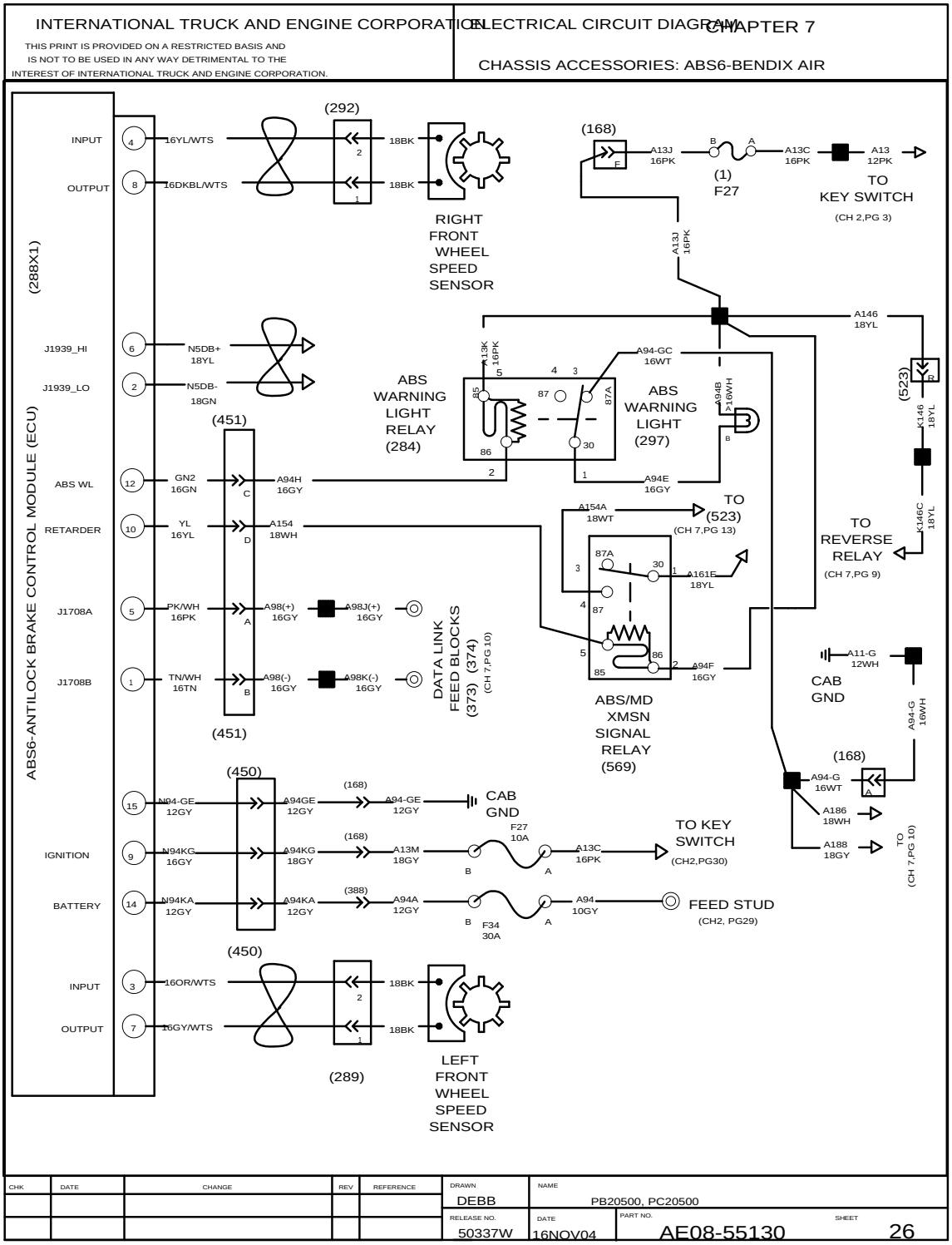

Figure 195 ABS6 — Bendix Air

ABS6 — Bendix Air, p. 27

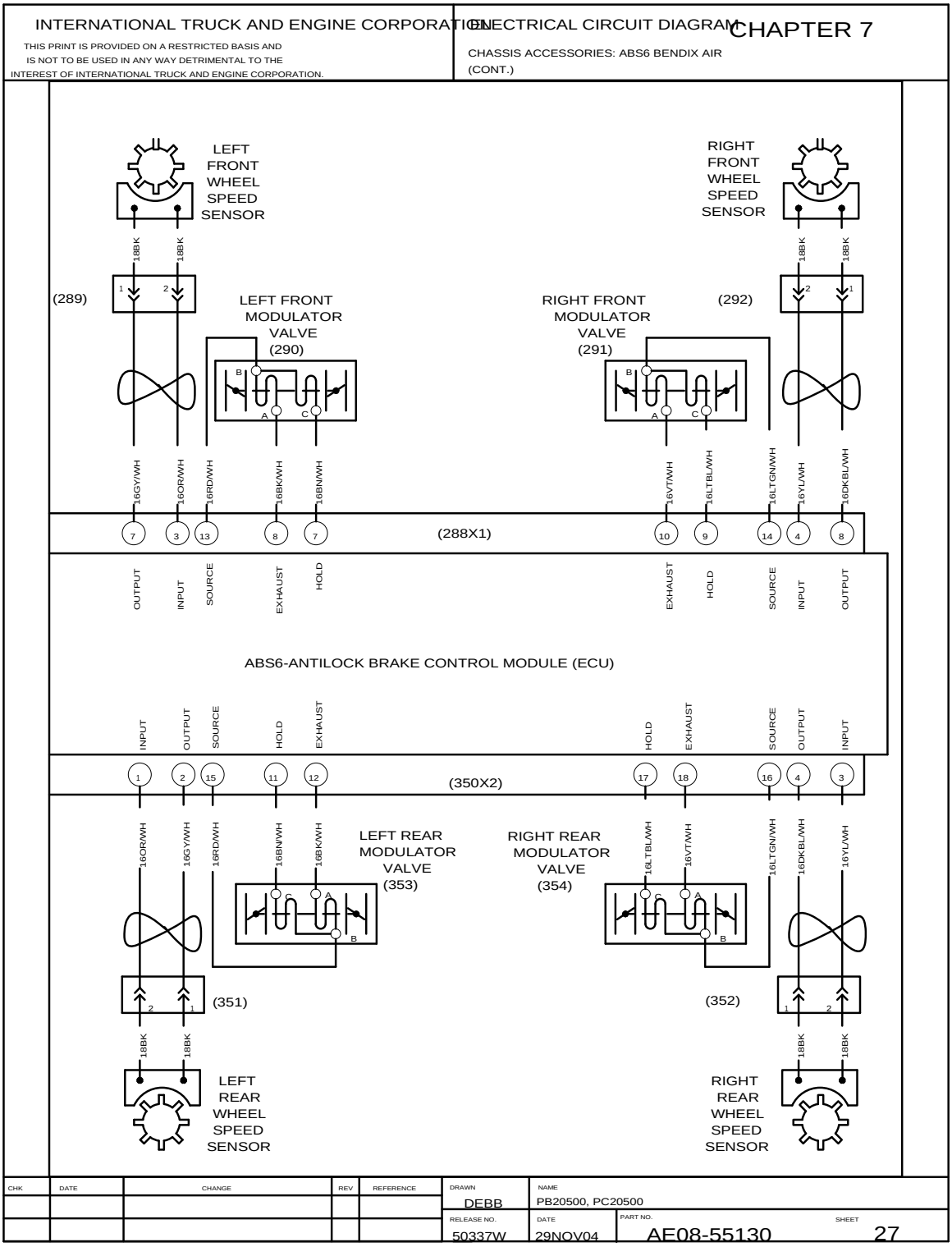

Figure 196 ABS6 — Bendix Air

J1939 Datalink W/Allison 3000 Series (WTEC) Transmission, ABS6 Bendix Air, p. 28

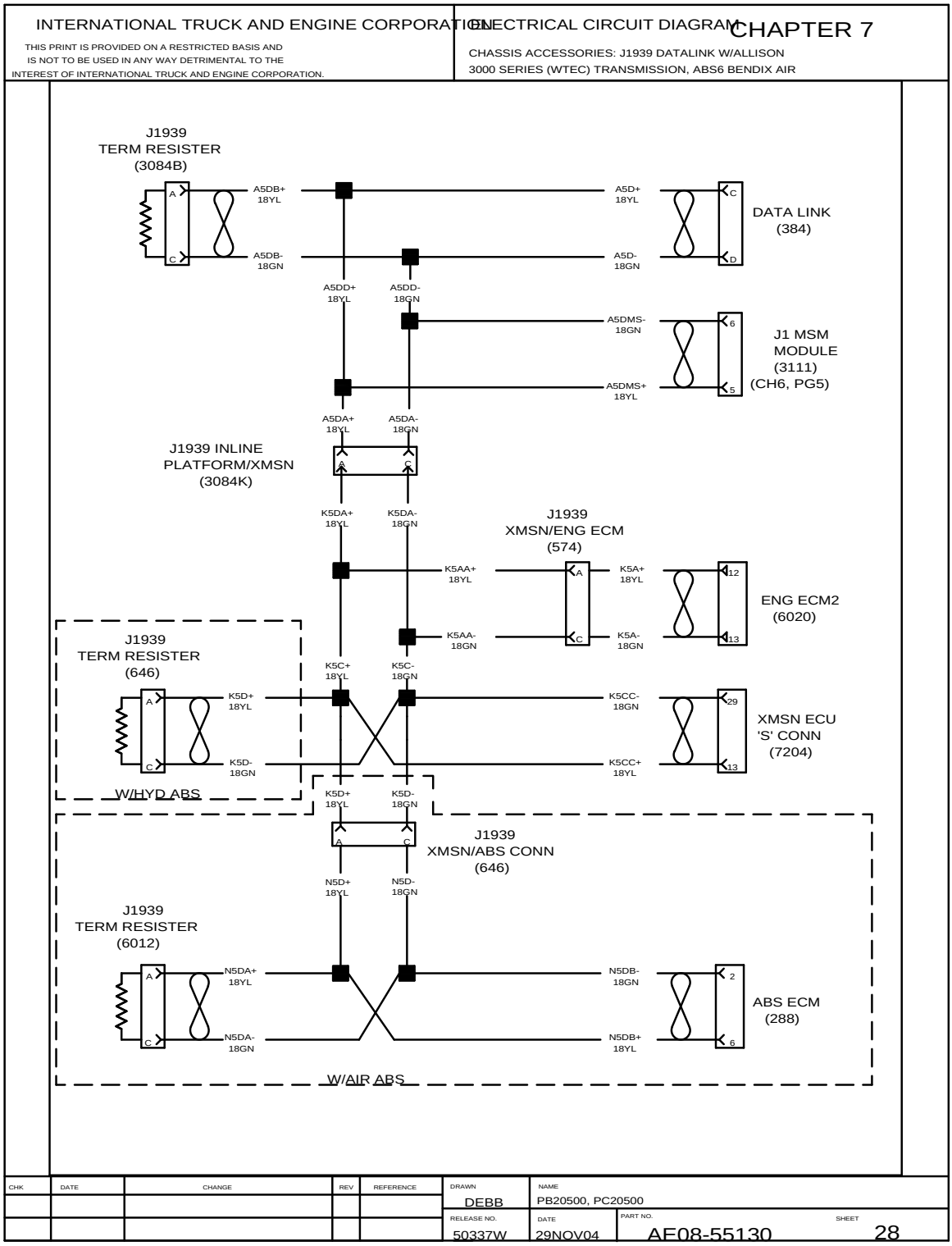

Figure 197 J1939 Datalink W/Allison 3000 Series (WTEC) Transmission, ABS6 Bendix Air

Allison 1000/2000 Series (LCT) Gen 4 Transmission W/I6 Engine, p. 29

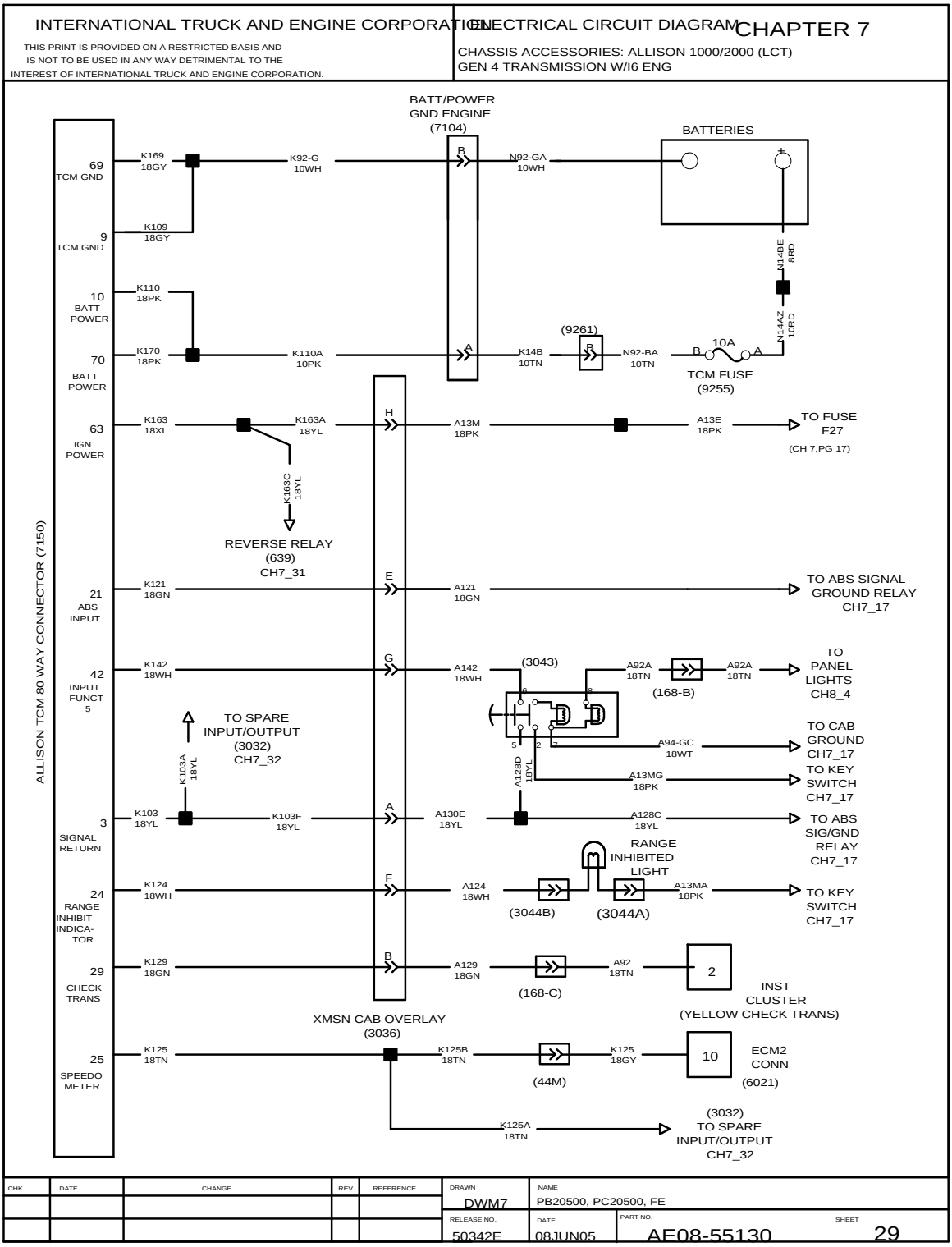

Figure 198 Allison 1000/2000 Series (LCT) Gen 4 Transmission W/I6 Engine

Allison 1000/2000 Series Gen 4 Transmission W/I6 Engine, p. 30

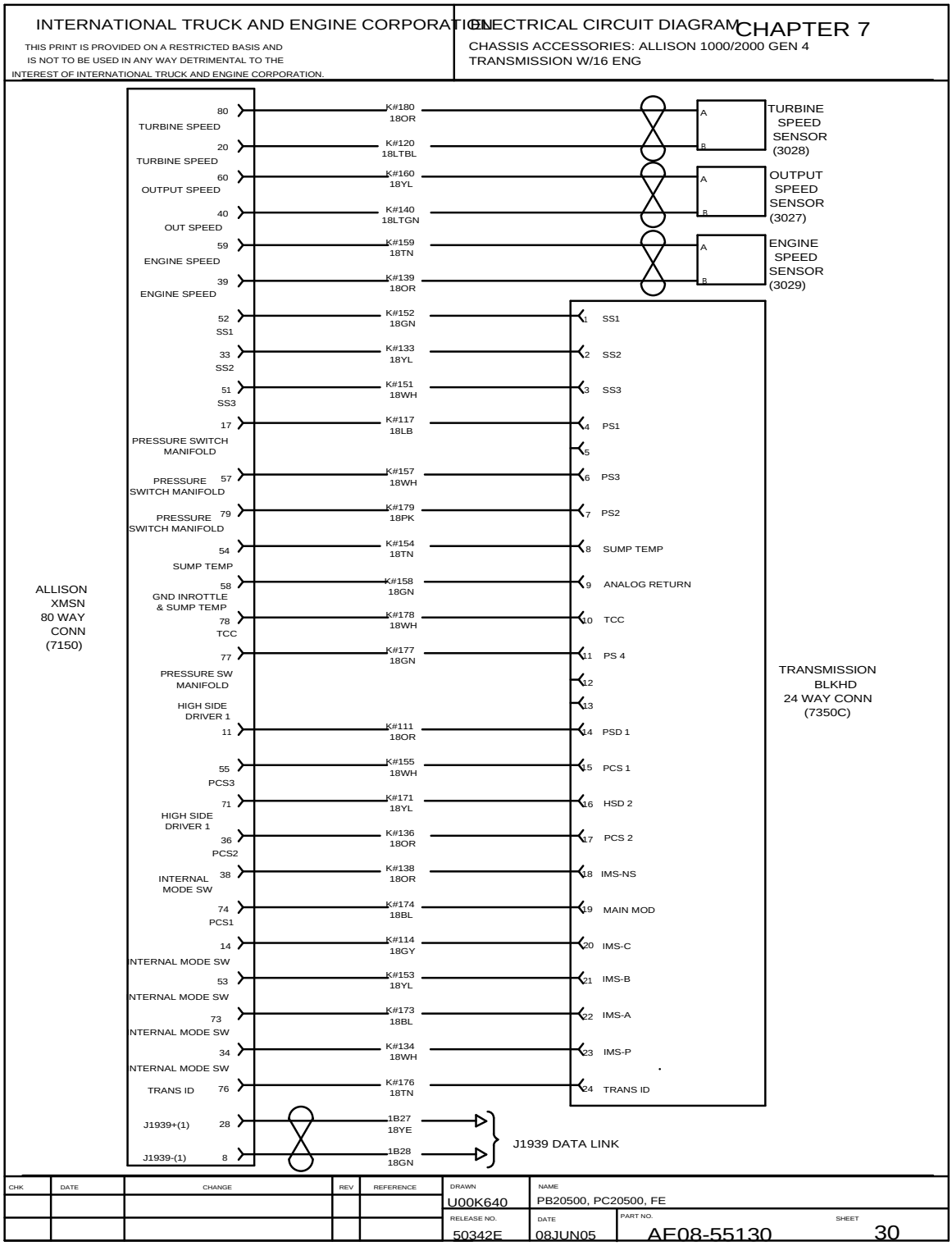

Figure 199 Allison 1000/2000 Series Gen 4 Transmission W/I6 Engine

Allison 1000/2000 Series Gen 4 Transmission W/I6 Engine, p. 31

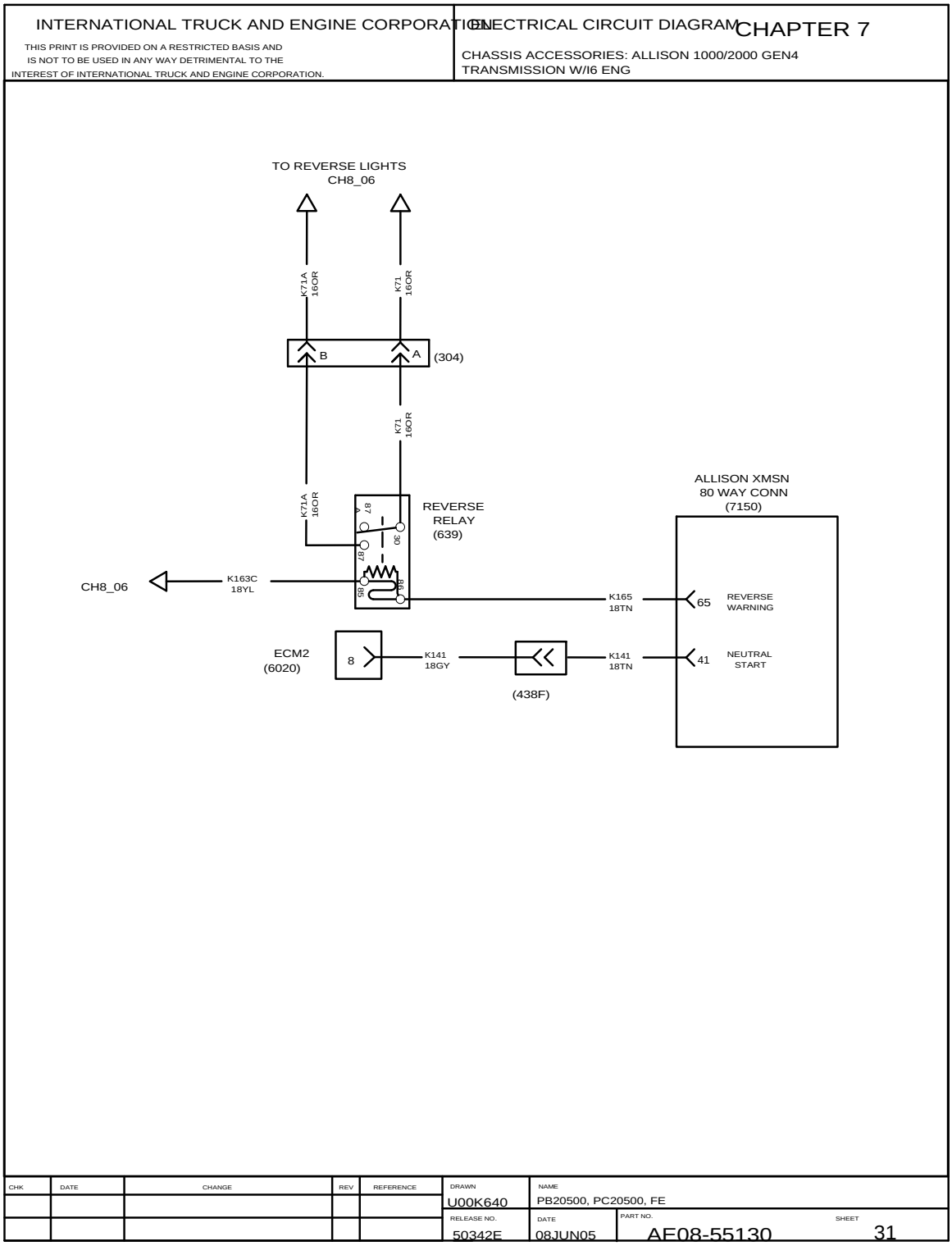

Figure 200 Allison 1000/2000 Series Gen 4 Transmission W/I6 Engine

Allison 1000/2000 Series Gen 4 Transmission, p. 32

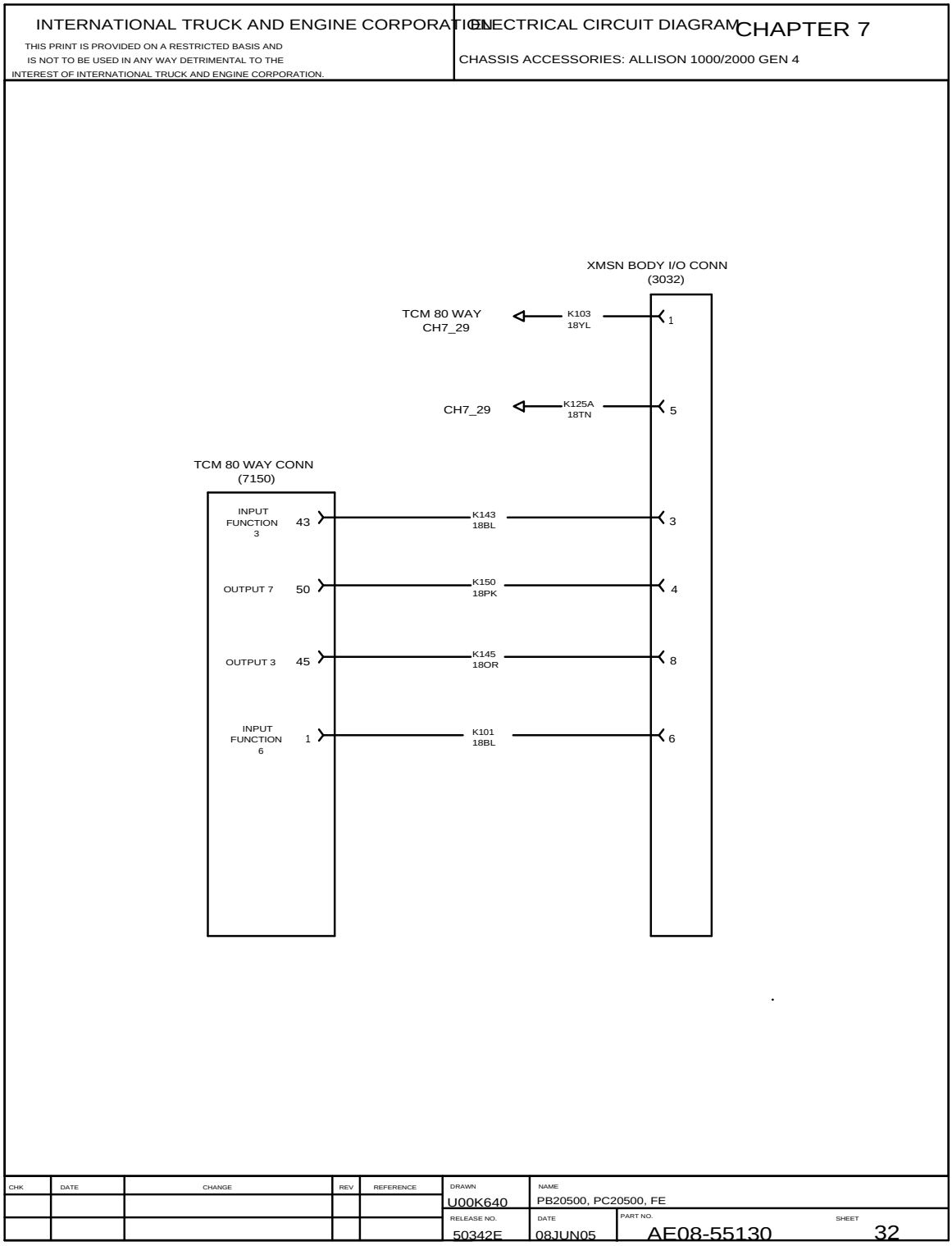

Figure 201 Allison 1000/2000 Series Gen 4 Transmission

Allison Automatic 3000/4000 Series Gen 4 Transmission, p. 33

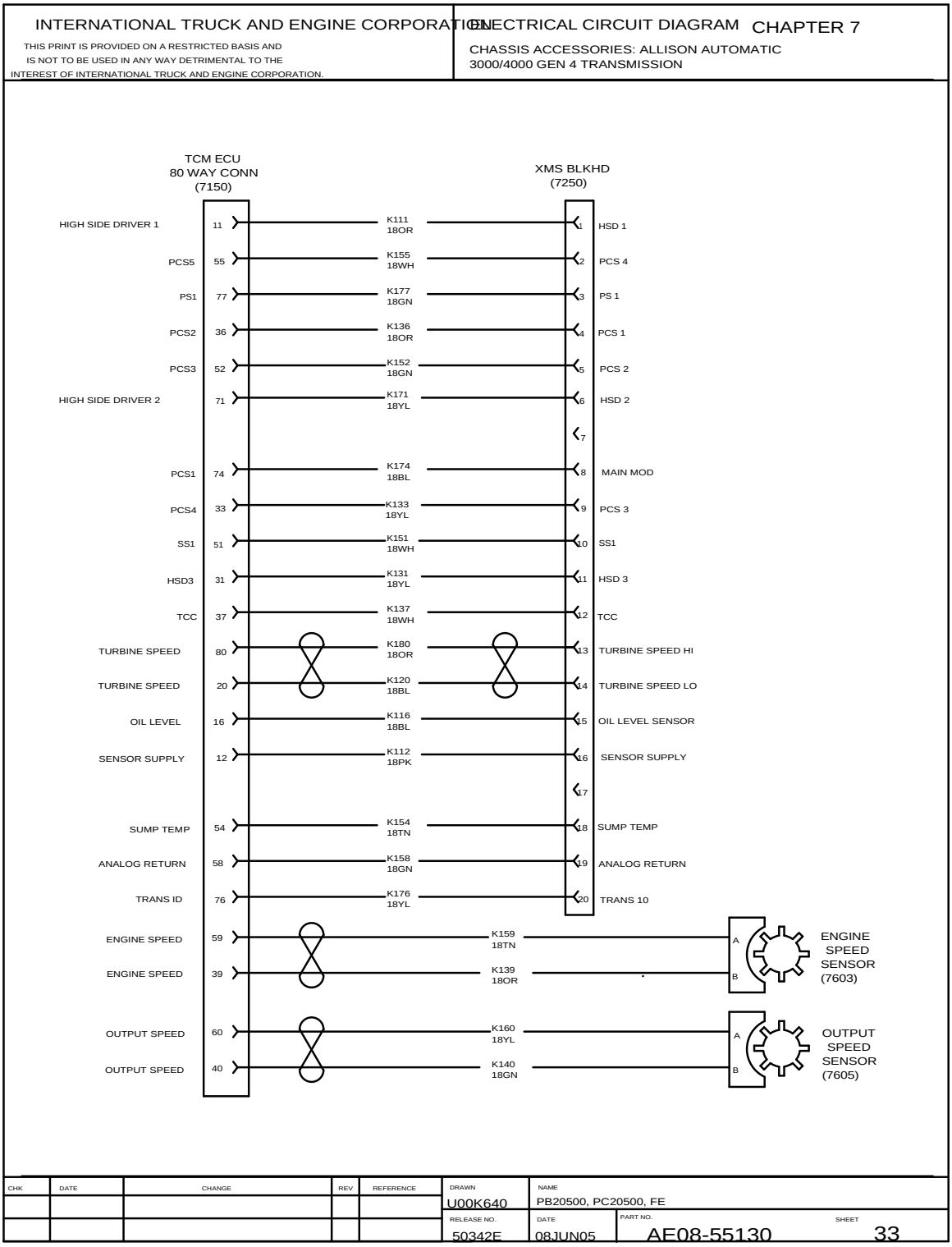

Figure 202 Allison Automatic 3000/4000 Series Gen 4 Transmission

Allison 3000/4000 Series Gen 4 Transmission W/I6 EGR, p. 34

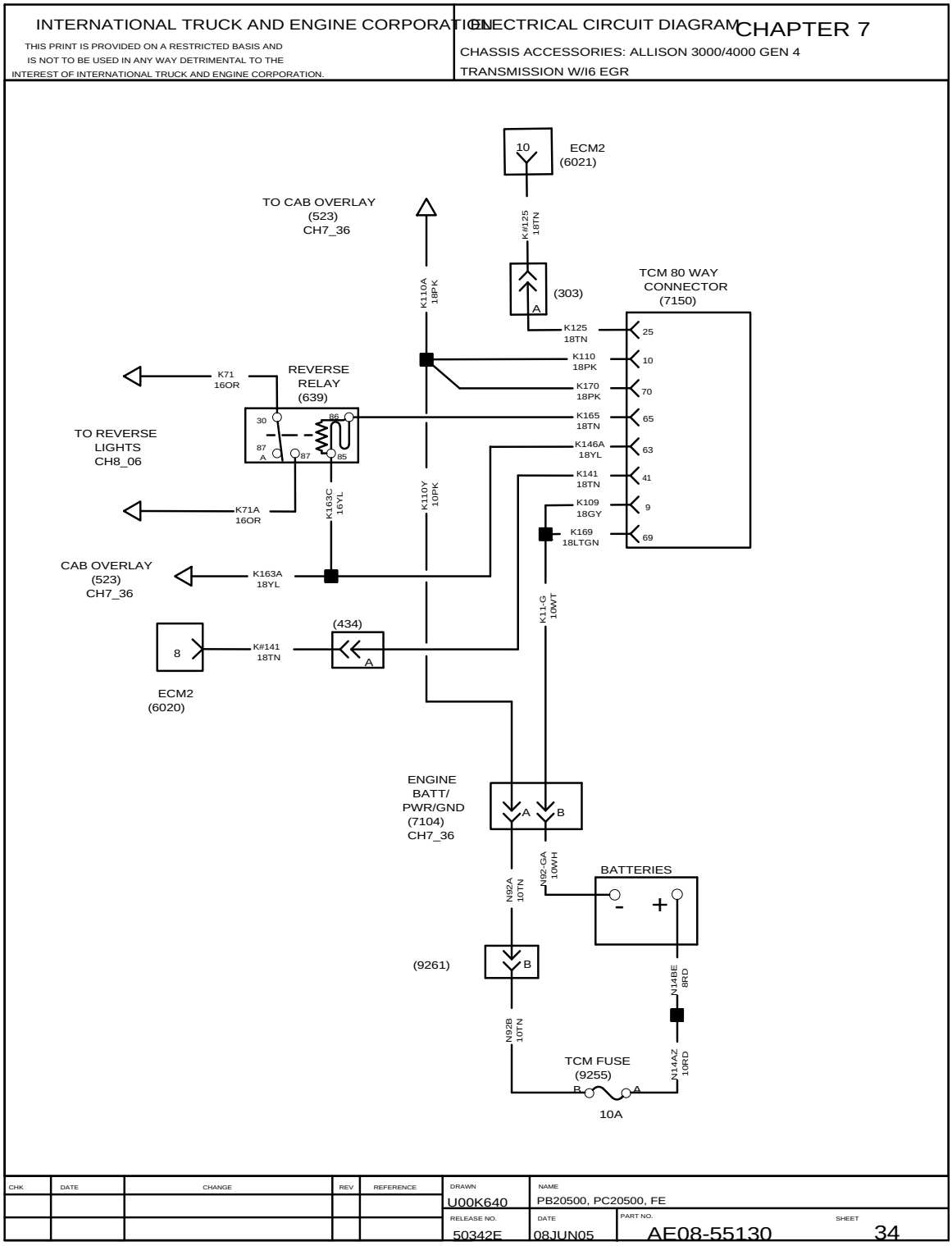

Figure 203 Allison 3000/4000 Series Gen 4 Transmission W/I6 EGR

Allison 3000/4000 Series Gen 4 (Electronic) Spare Input/Outputs, p. 35

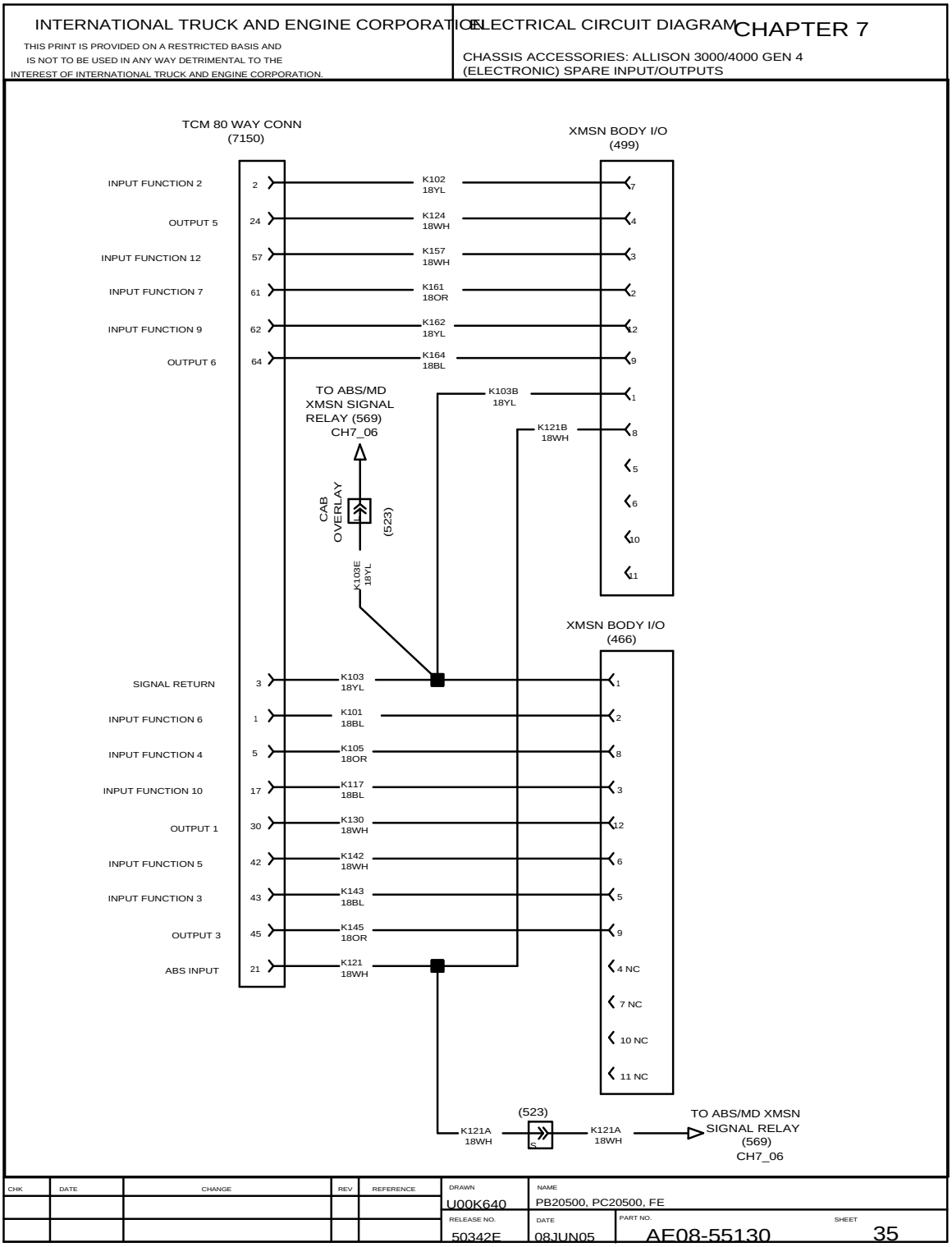

Figure 204 Allison 3000/4000 Series Gen 4 (Electronic) Spare Input/Outputs

Allison 3000/4000 Series Gen 4 (Electronic) W/ I6 Engine, p. 36

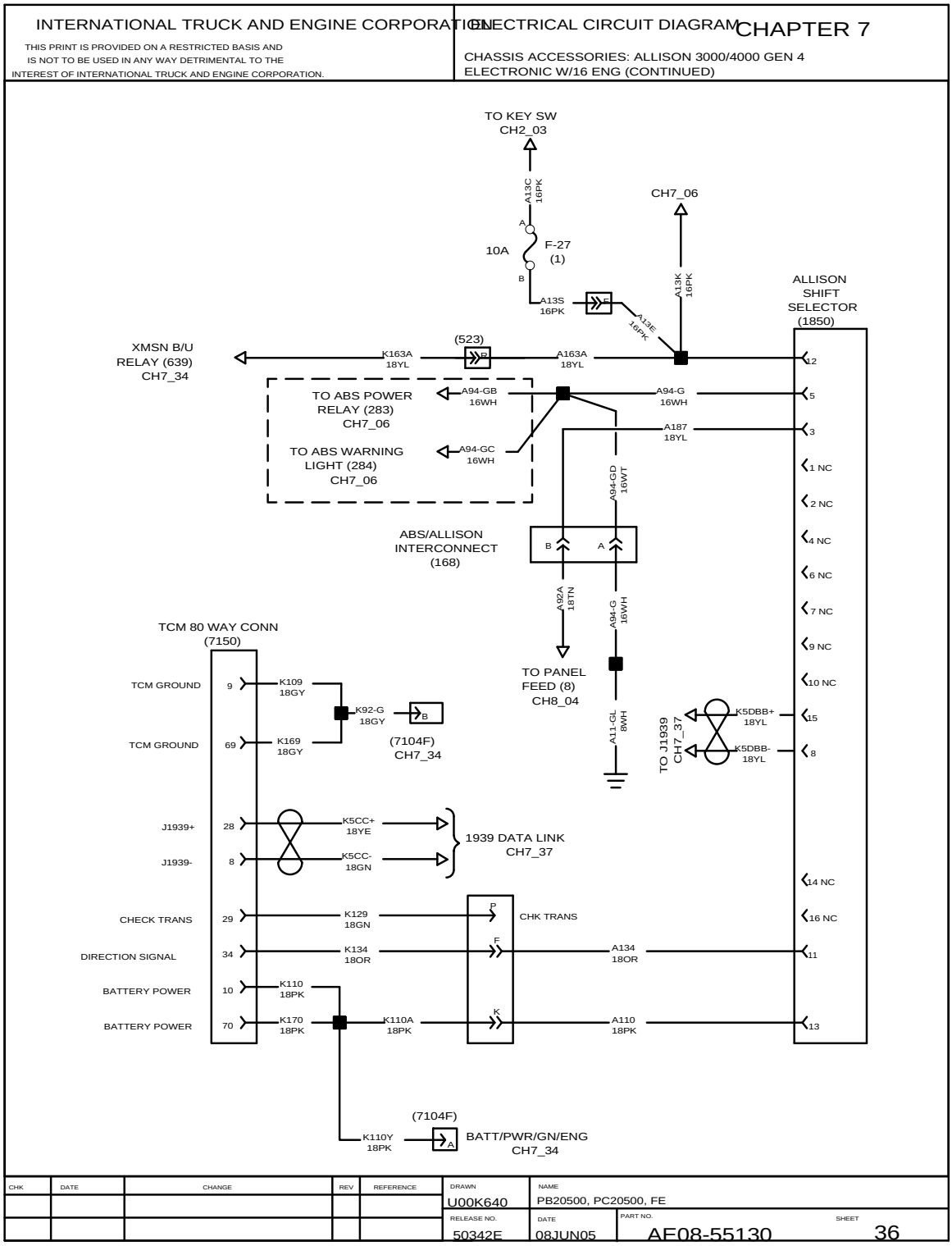

Figure 205 Allison 3000/4000 Series Gen 4 (Electronic) W/ I6 Engine

J1939 Datalink W/Allison Gen 4 Series WTEC Transmission, ABS 6 Bendix Air, p. 37

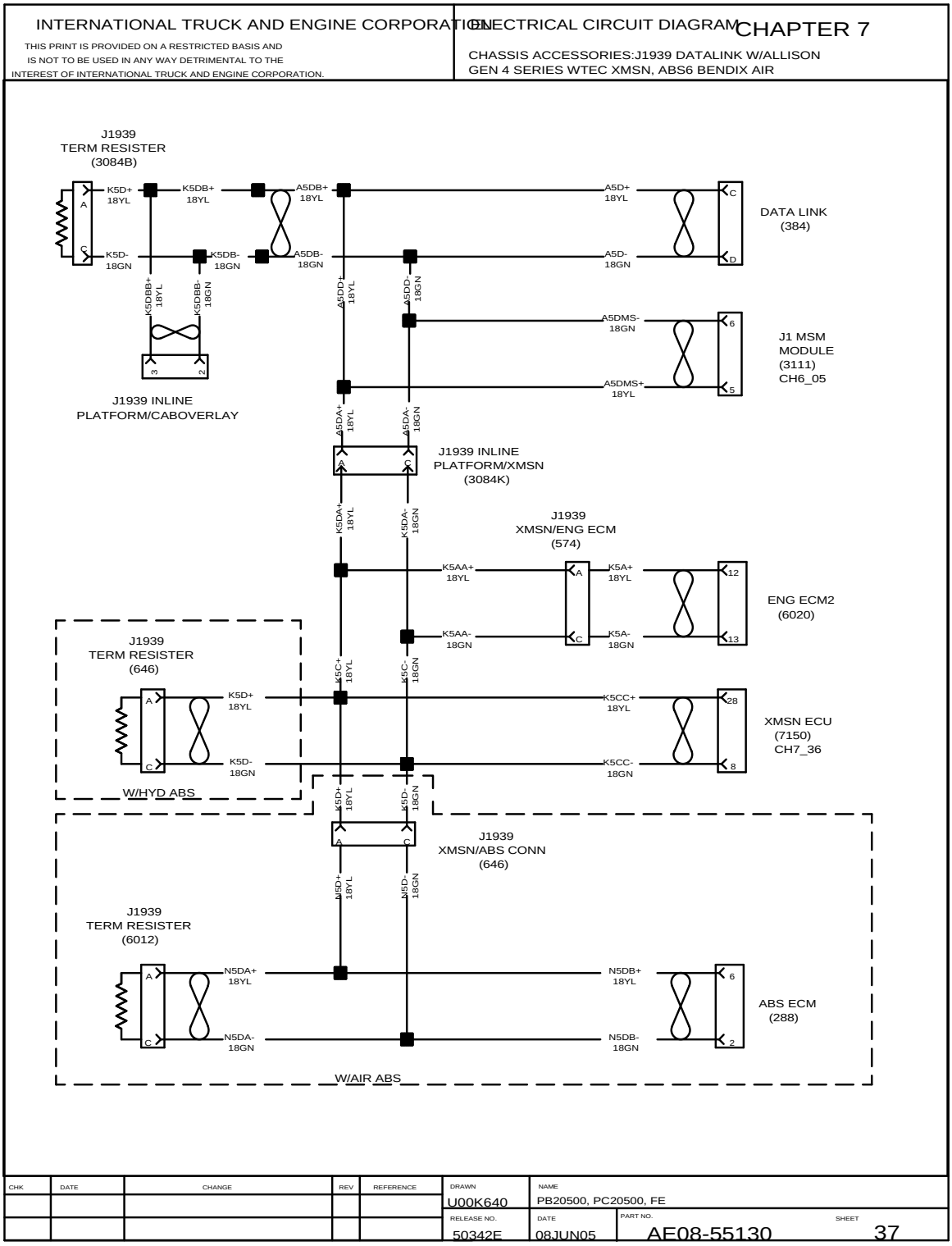

Figure 206 J1939 Datalink W/Allison Gen 4 Series WTEC Transmission, ABS 6 Bendix Air

Air Powered Park Brake with Hydraulic Brakes, p. 38

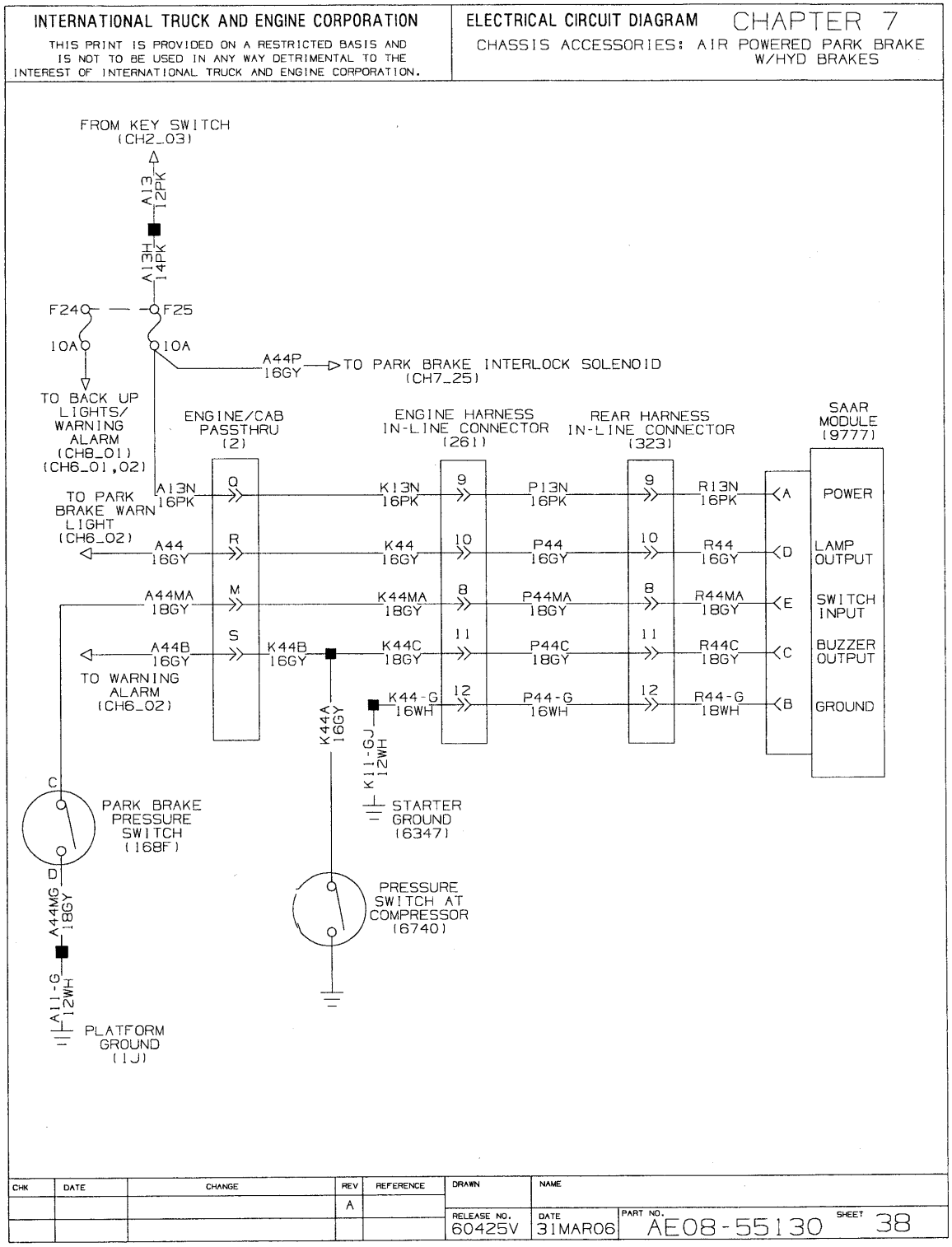

Figure 207 Air Powered Park Brake with Hydraulic Brakes

2.8. LIGHT SYSTEMS (CHAPTER 8)

Back-Up Light System, p. 1

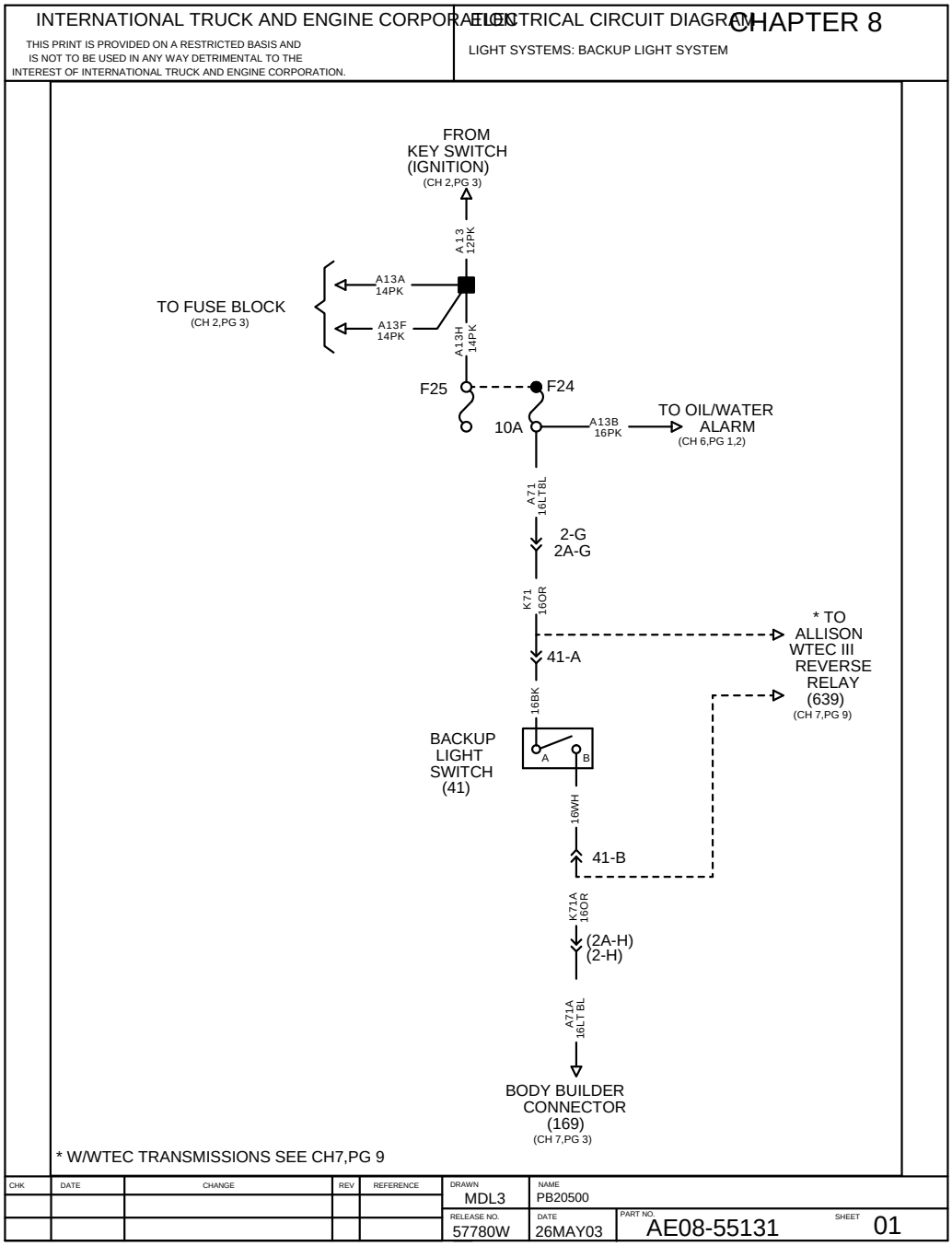

Figure 208 Back-Up Light System

Daytime Running Lights (USA), p. 2

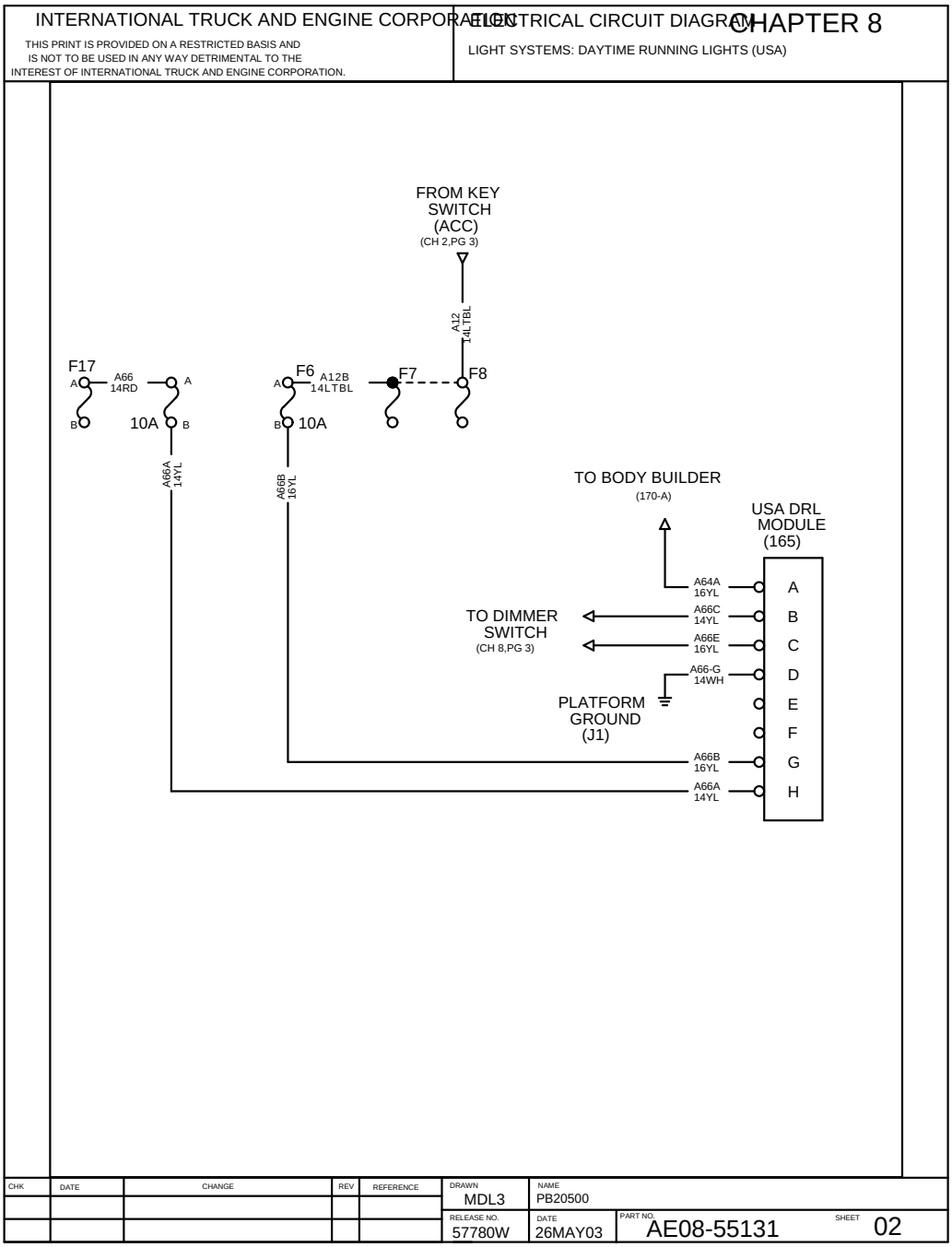

Figure 209 Daytime Running Lights (USA)

Headlight System With Douglas Turn Signal Switch (Tilt Column), p. 3

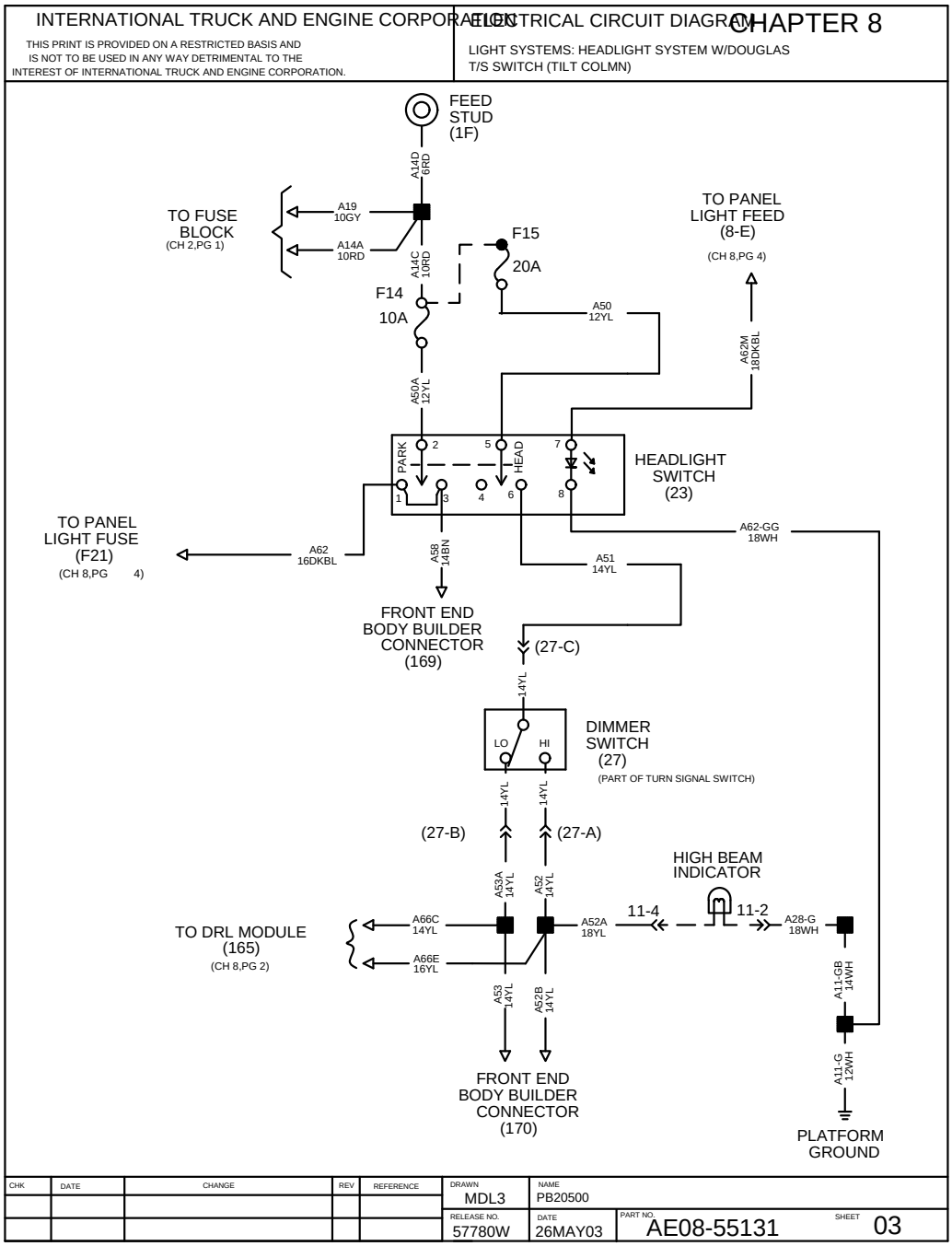

Figure 210 Headlight System With Douglas Turn Signal Switch (Tilt Column)

Panel Lights, p. 4

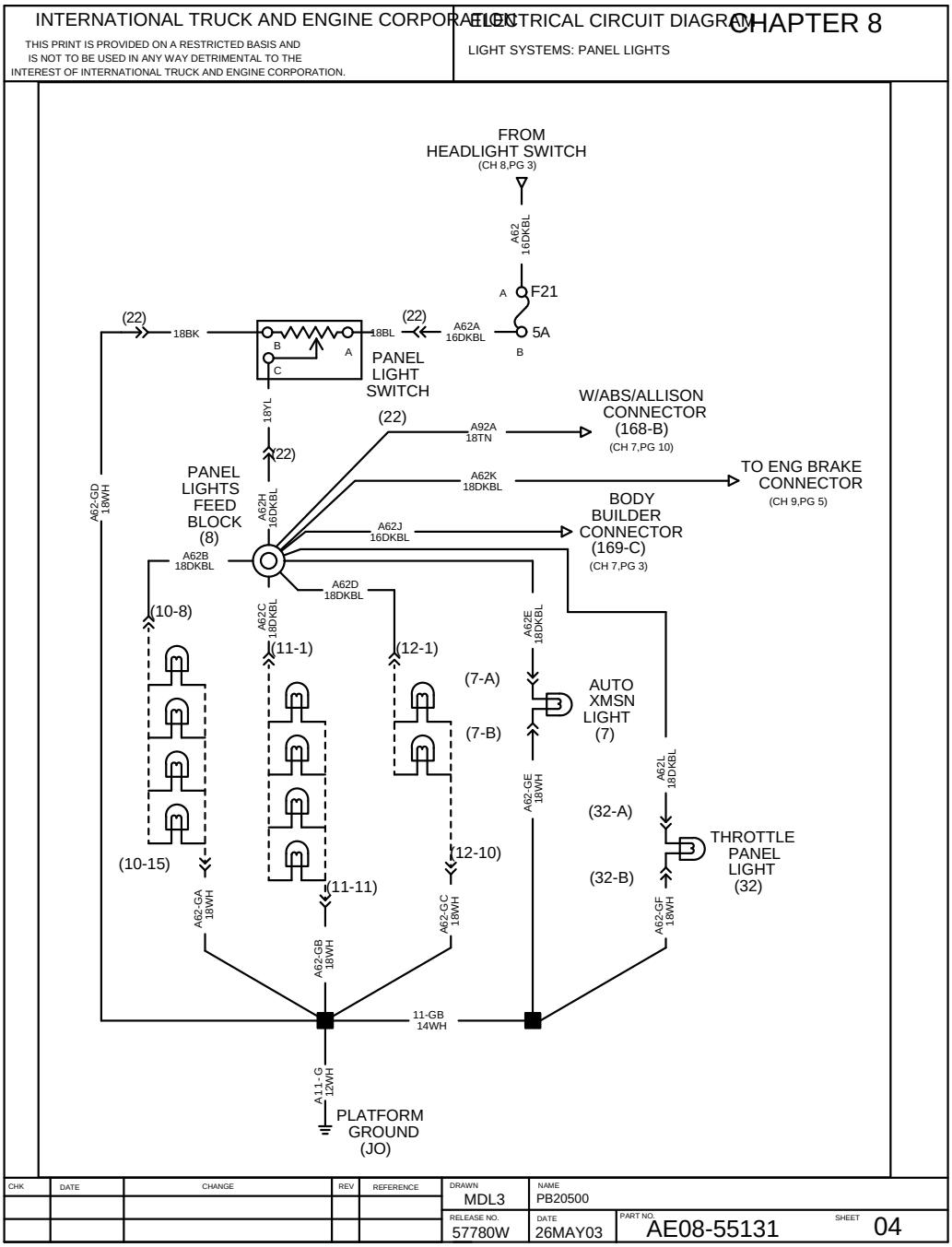

Figure 211 Panel Lights

Turn Signal System, p. 5

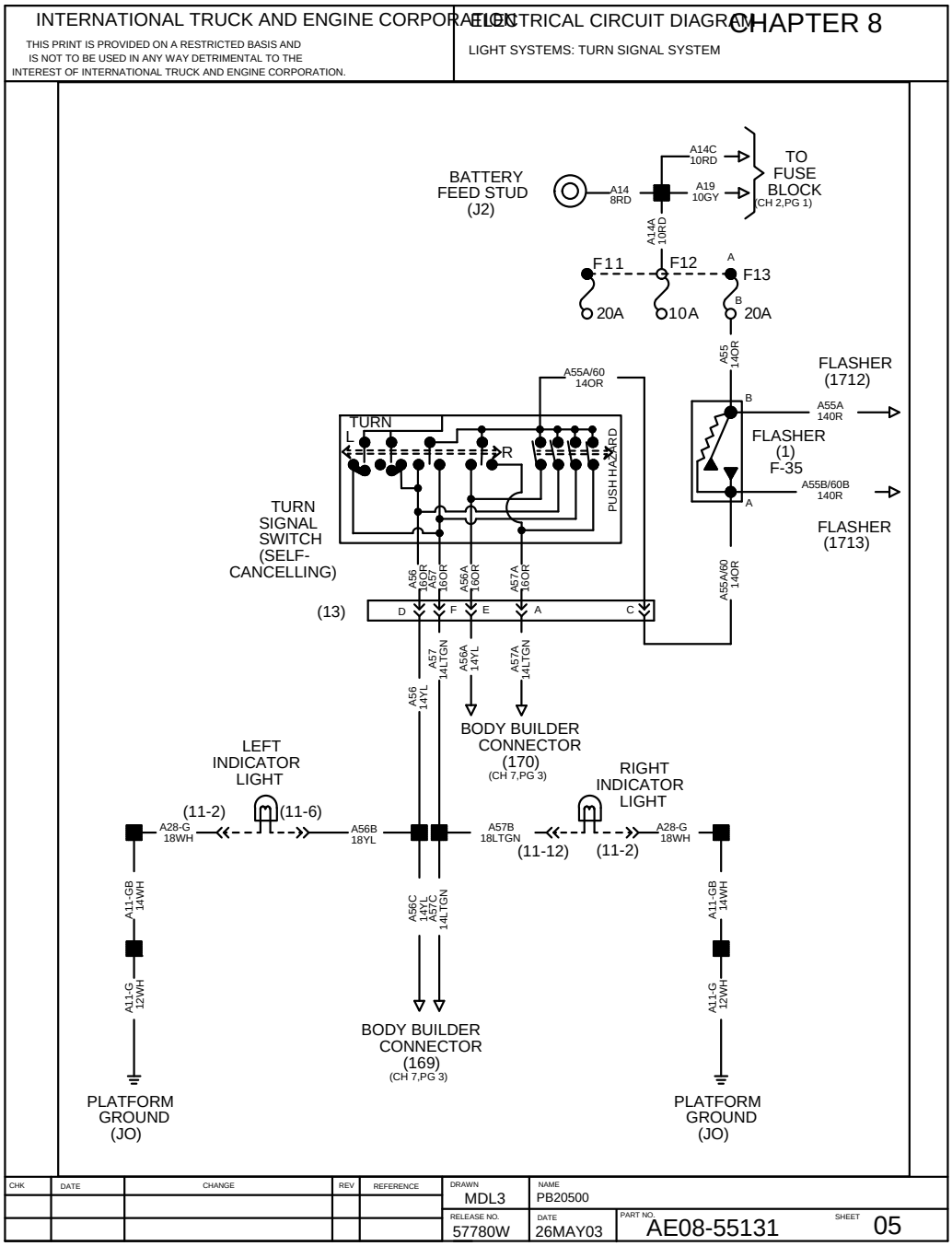

Figure 212 Turn Signal System

Back–Up Light System, p. 6

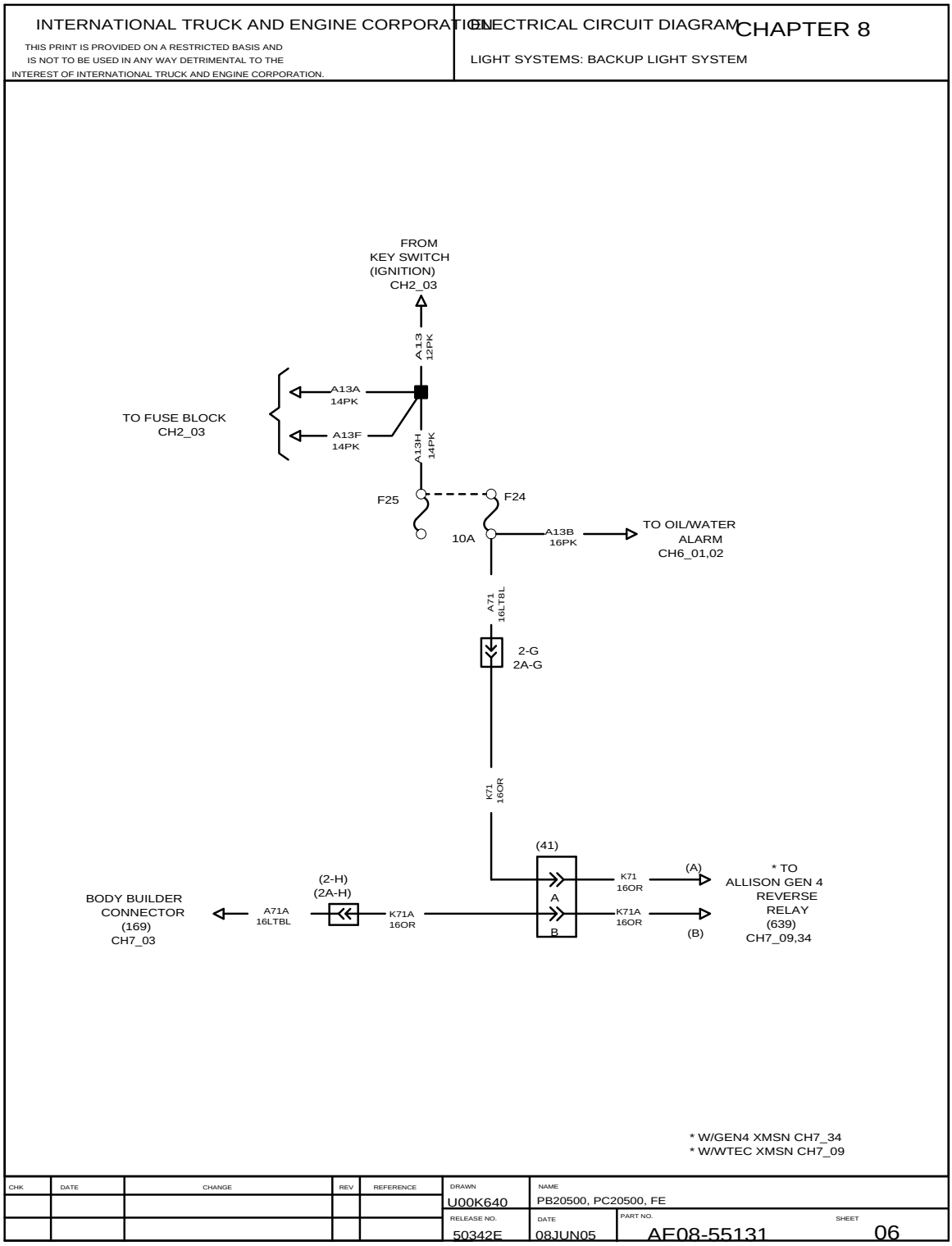

Figure 213 Back–Up Light System

Daytime Running Lights with Engine Running Only, p. 7

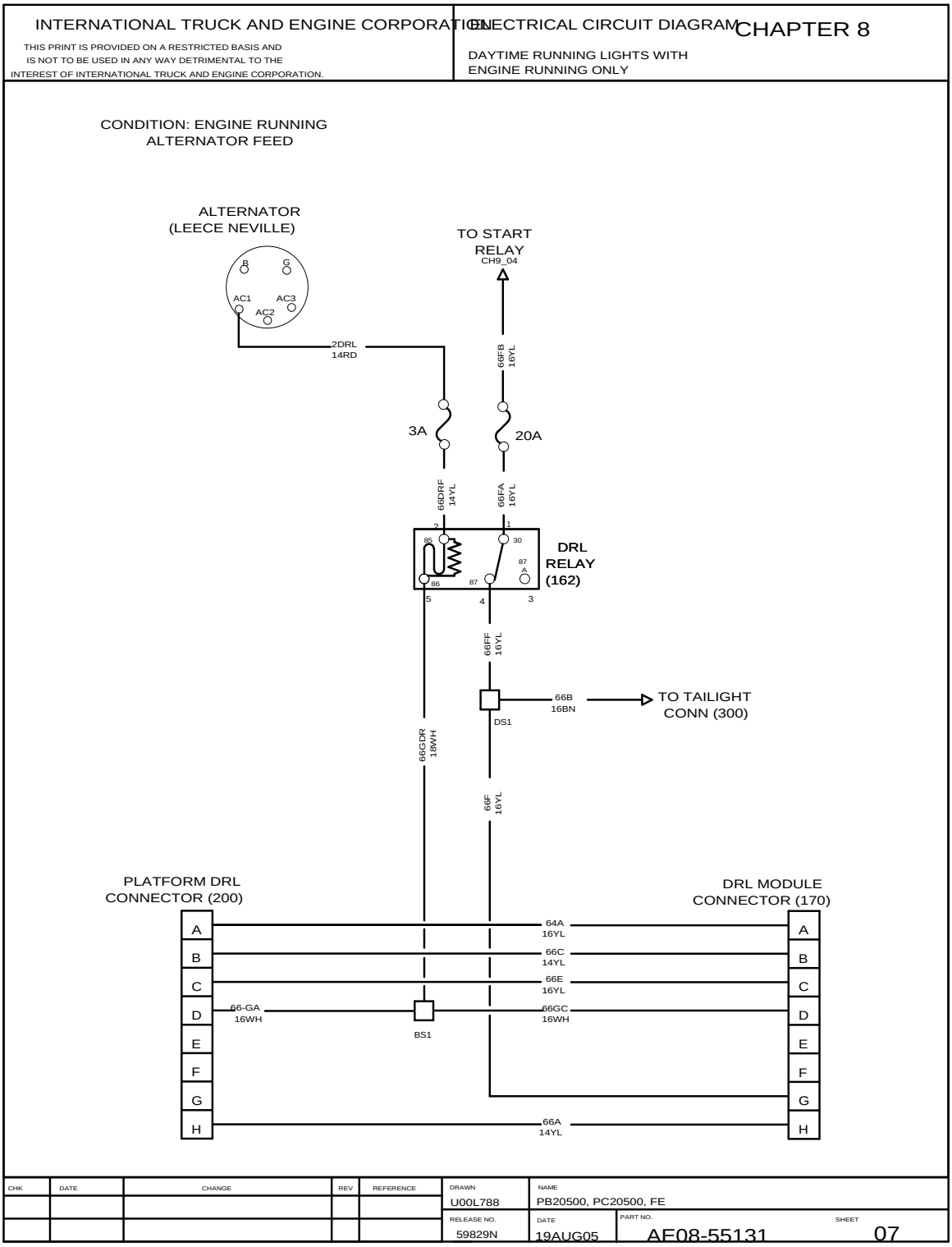

Figure 214 Daytime Running Lights with Engine Running Only

Daytime Running Lights with Engine Running Only, p. 8

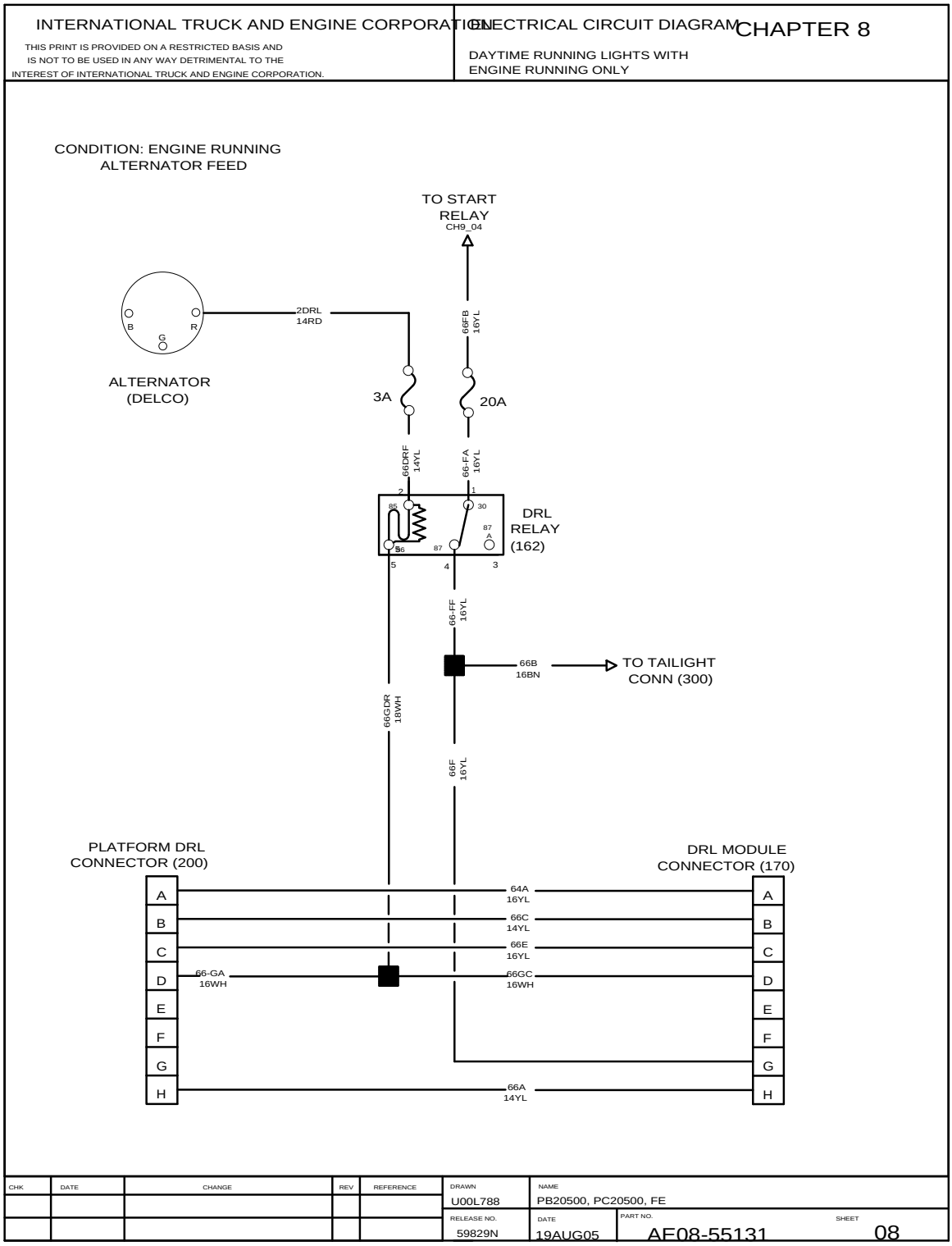

Figure 215 Daytime Running Lights with Engine Running Only

2.9. ELECTRONIC CONTROLS (CHAPTER 9)

ECM Power/Ground Systems, p. 1

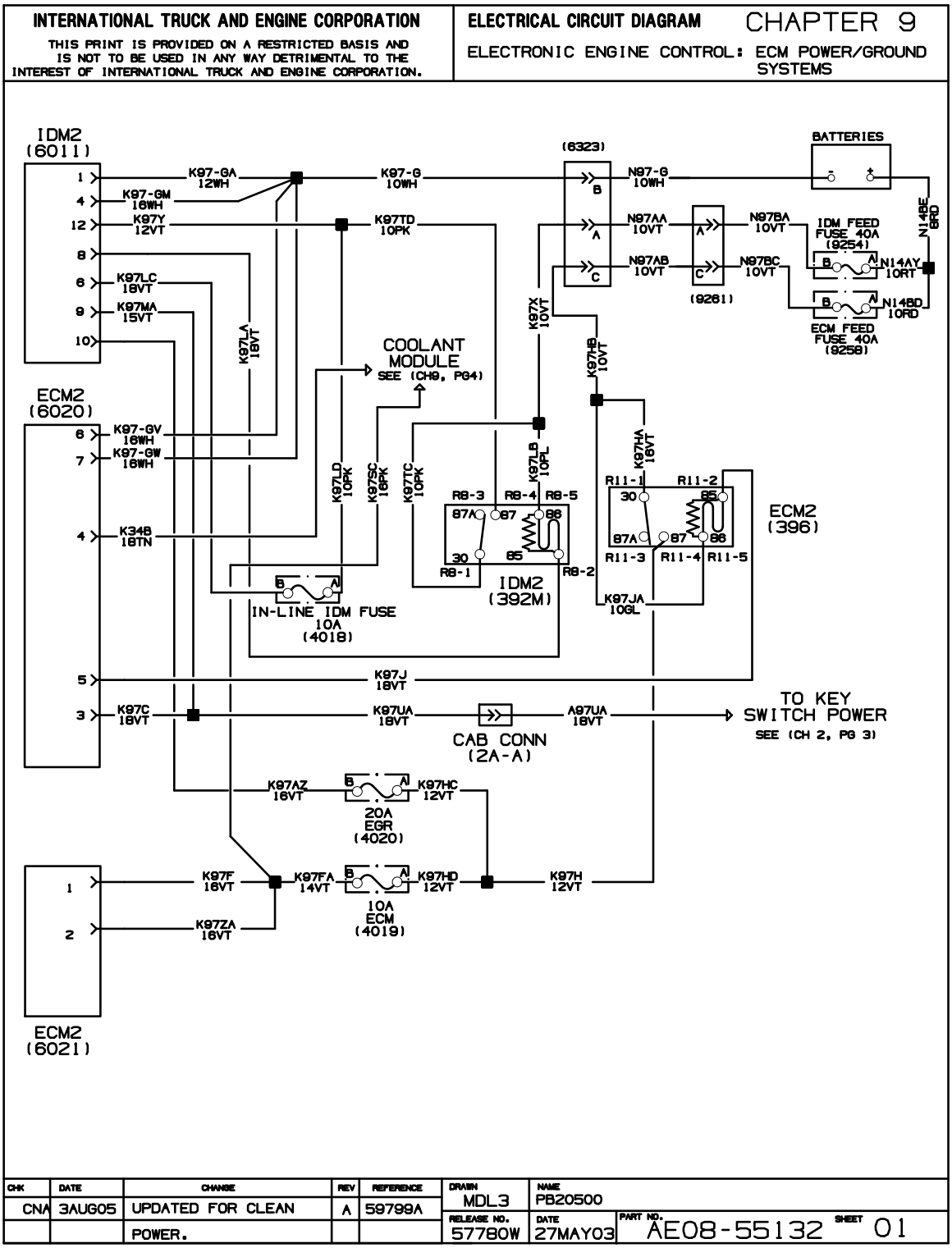

Figure 216 ECM Power/Ground Systems

Accelerator, BAP and ATS Systems, p. 2

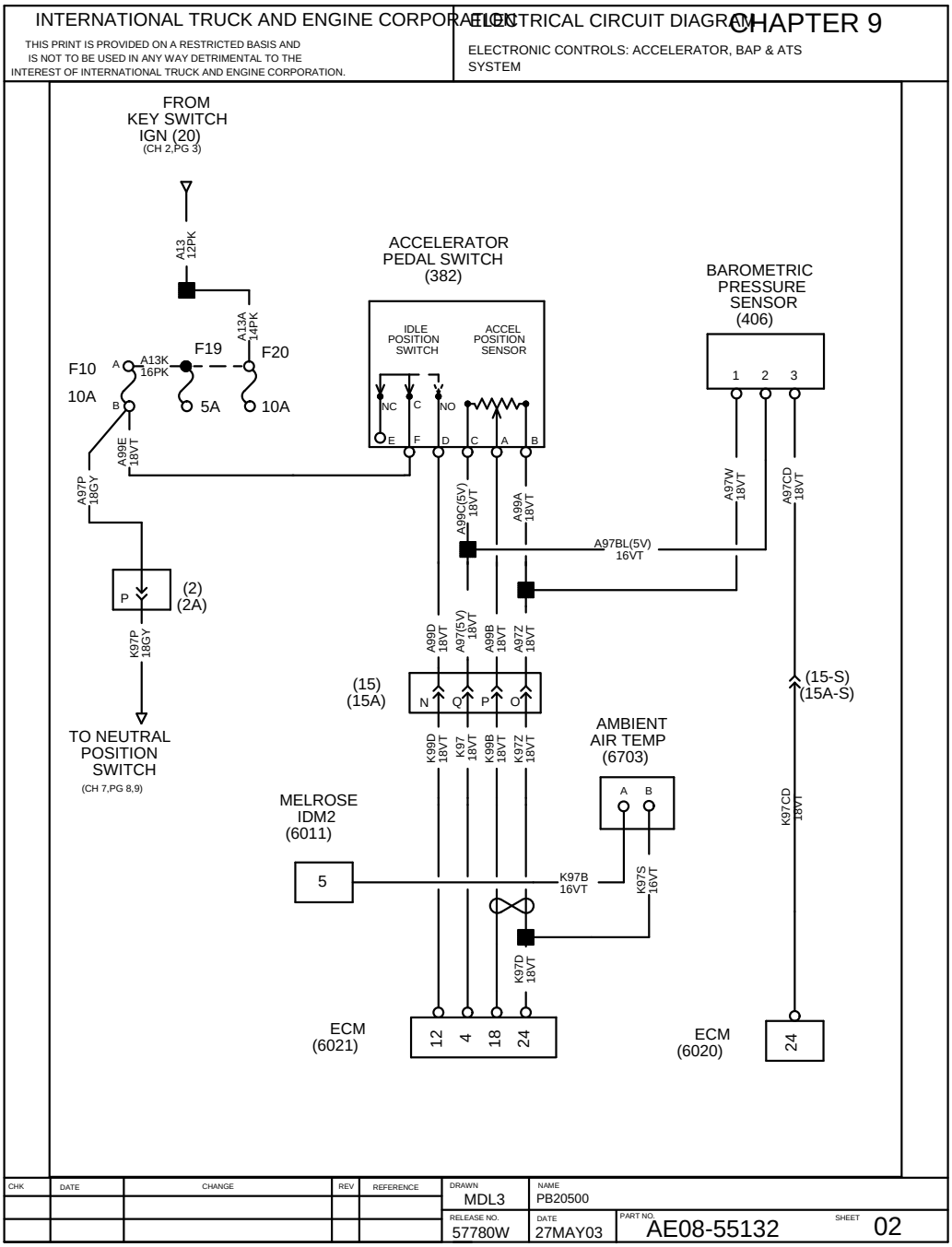

Figure 217 Accelerator, BAP and ATS Systems

Cruise Control Hand Throttle System, p. 3

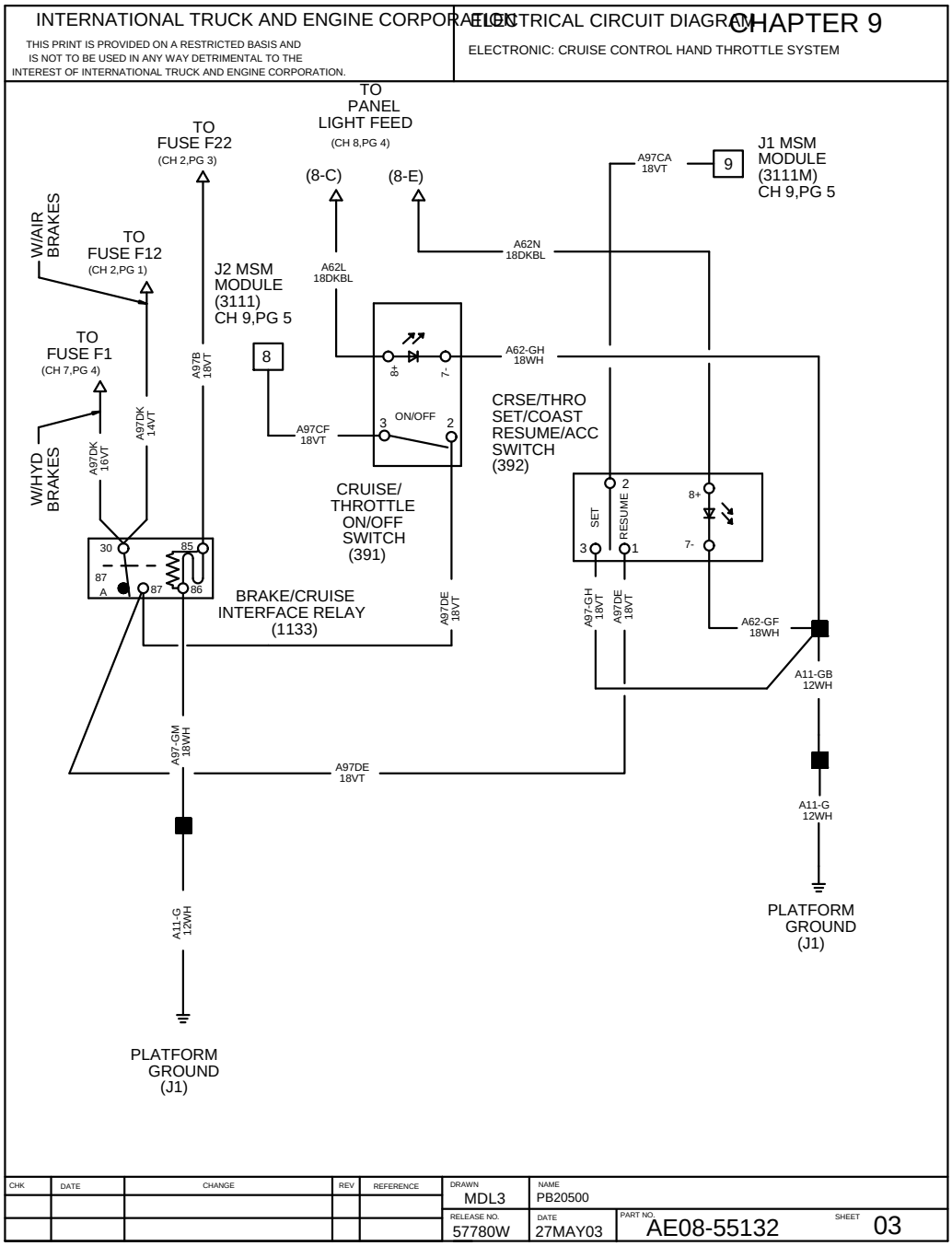

Figure 218 Cruise Control Hand Throttle System

Coolant Sensor Module, p. 4

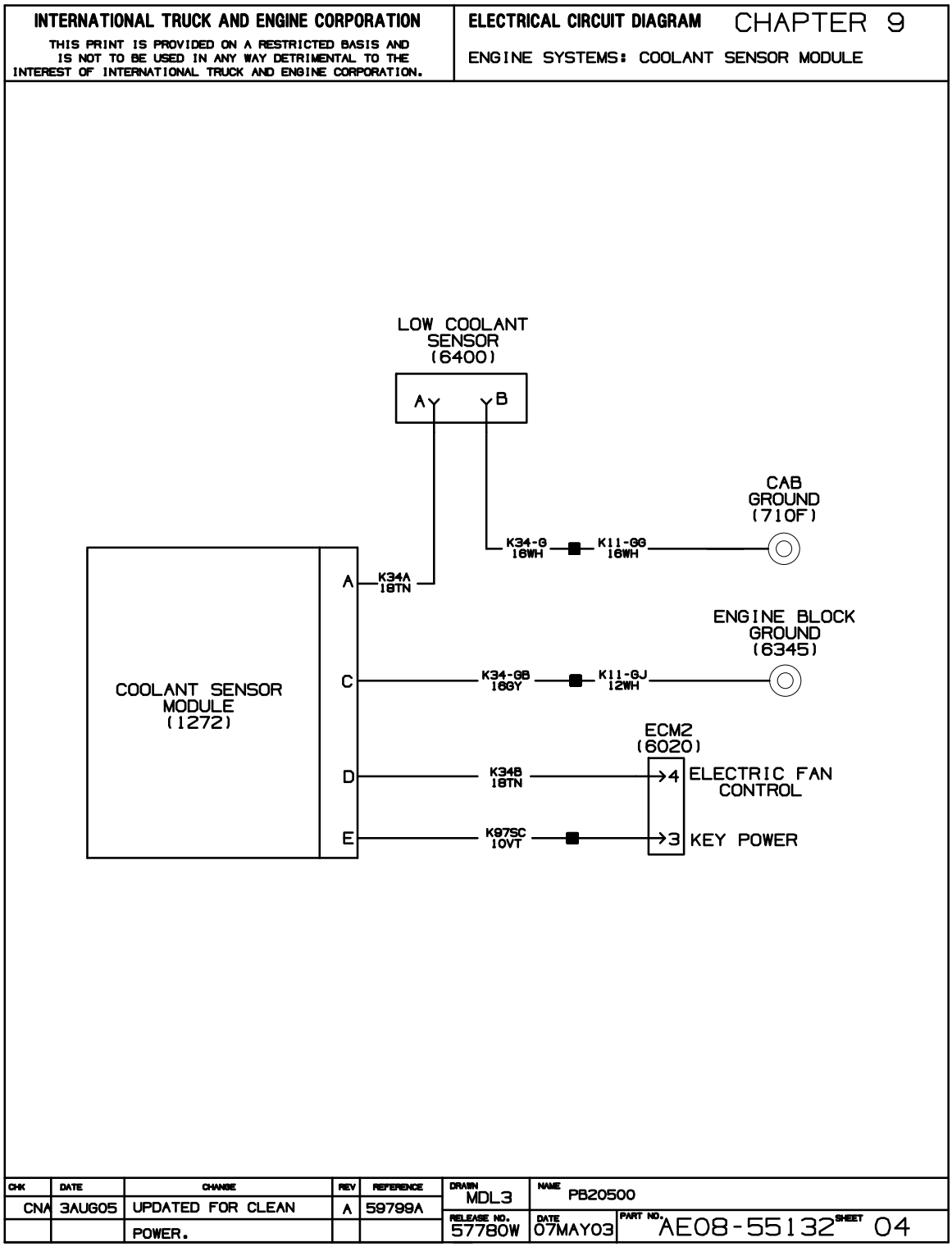

Figure 219 Coolant Sensor Module

Exh/Compression Brake and Exh Brake Only, p. 5

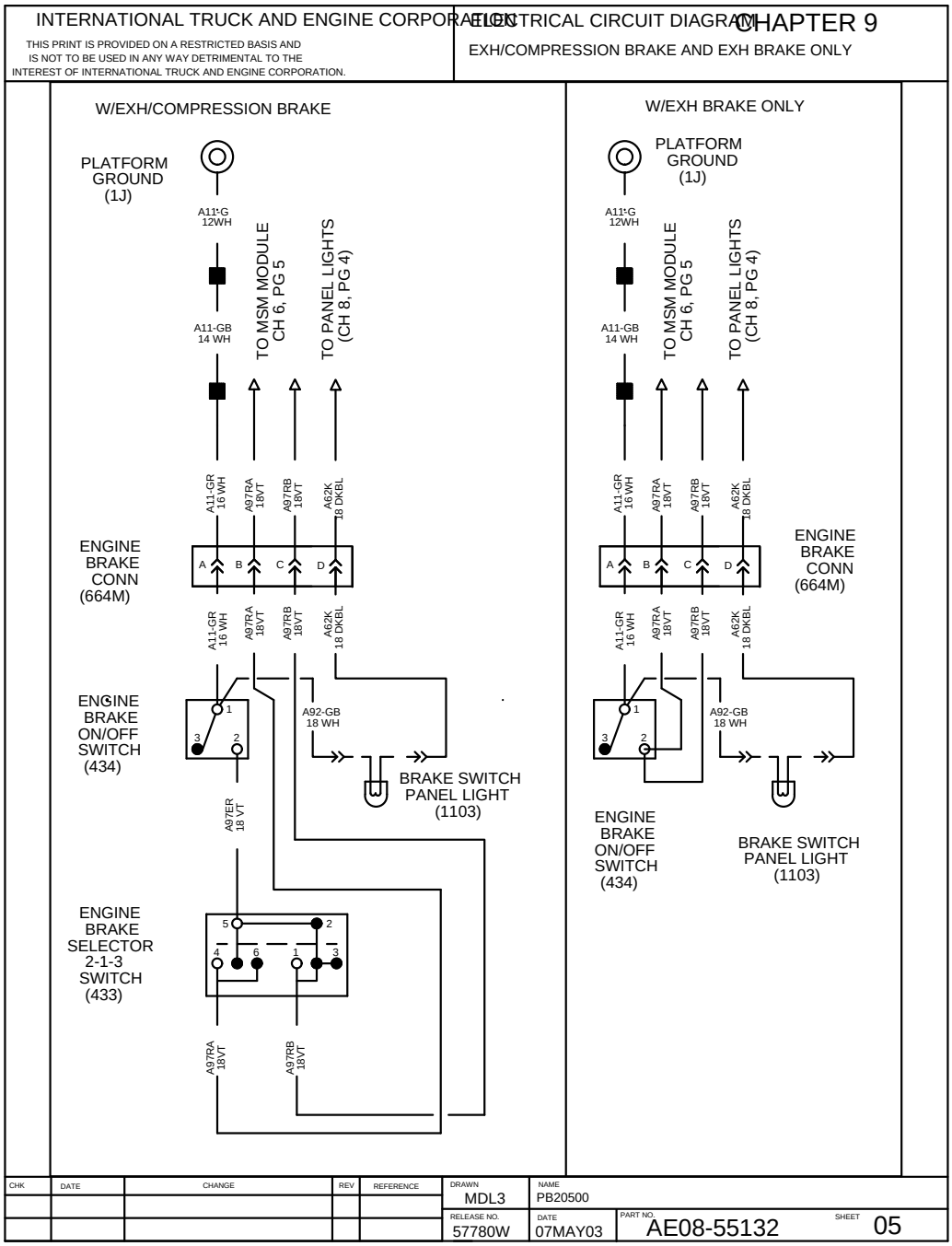

Figure 220 Exh/Compression Brake and Exh Brake Only

Increase Engine Idle Speed with AC On, p. 6

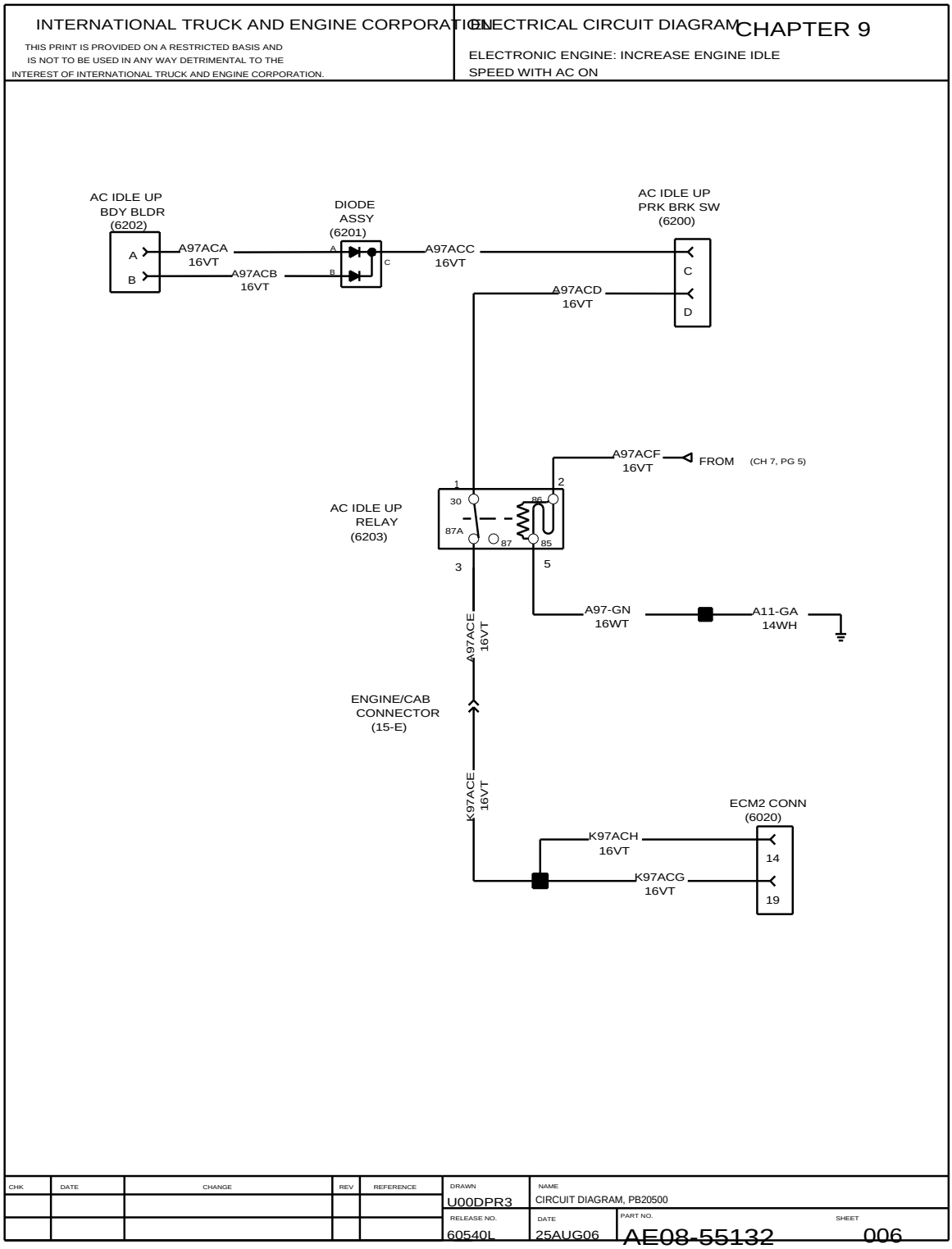

Figure 221 Increase Engine Idle Speed with AC On

2.10. CONNECTOR COMPOSITES (CHAPTER 10)

Junction Points — J1, J2, J3, J5, J6, J7, J8, 6345, p. 1

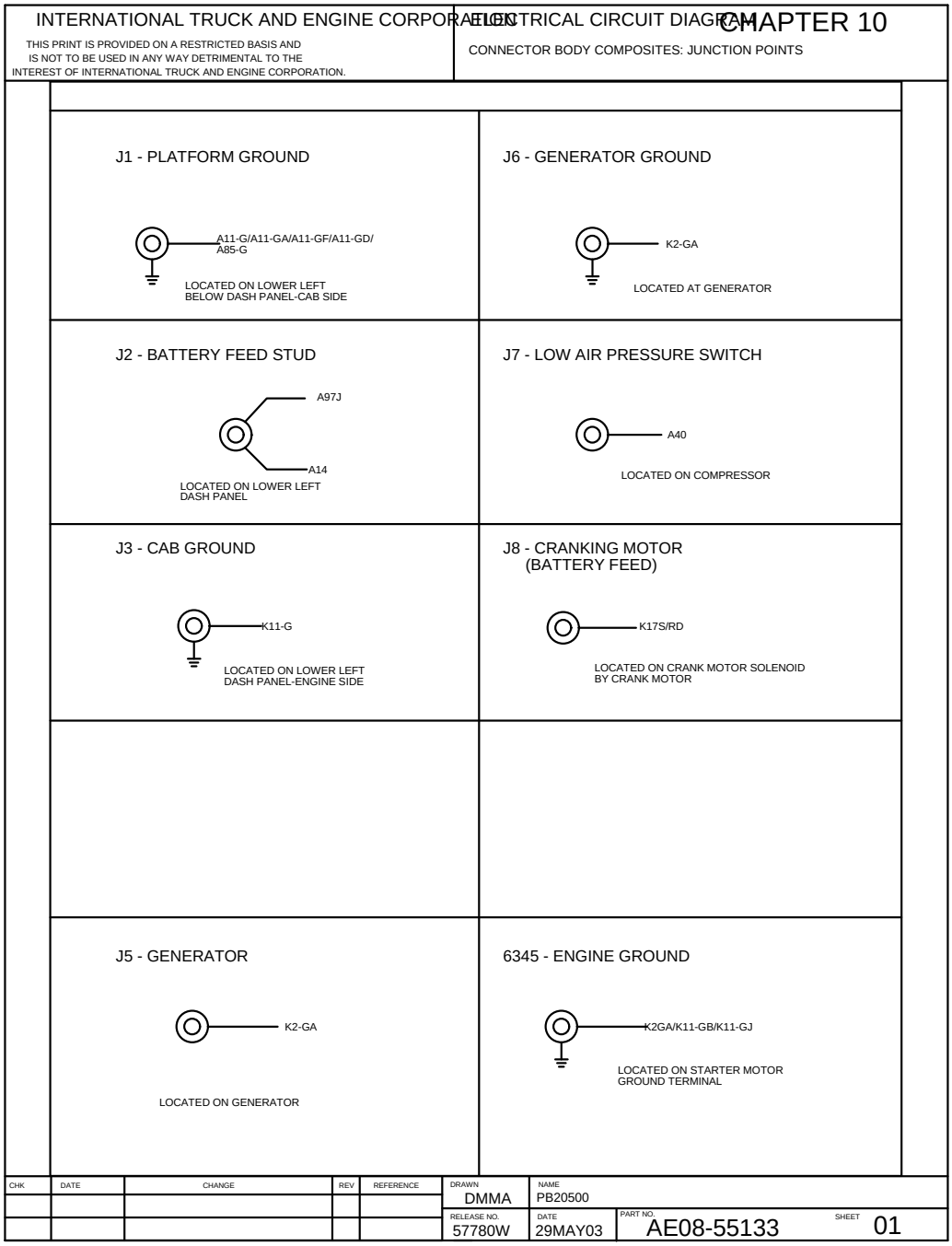

Figure 222 Junction Points — J1, J2, J3, J5, J6, J7, J8, 6345

Fuse Block Connections, p. 2

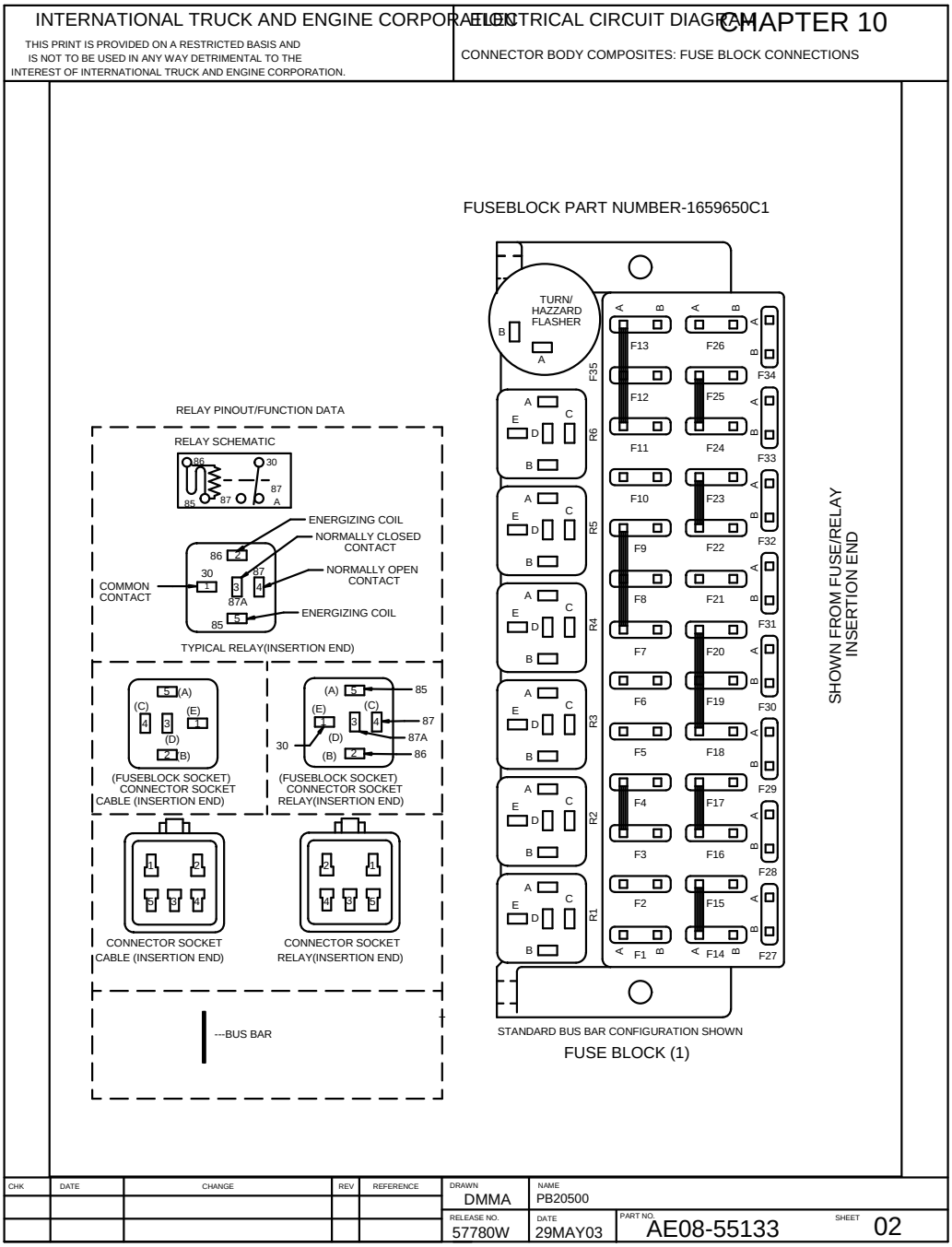

Figure 223 Fuse Block Connections

Fuse Block Connections, p. 3

INTERNATIONAL TRUCK AND ENGINE CORPORATION

THIS PRINT IS PROVIDED ON A RESTRICTED BASIS AND IS NOT TO BE USED IN ANY WAY DETRIMENTAL TO THE INTEREST OF INTERNATIONAL TRUCK AND ENGINE CORPORATION.

ELECTRICAL CIRCUIT DIAGRAM

CHAPTER 10

CONNECTOR BODY COMPOSITES: FUSE BLOCK CONNECTIONS

RELAYS

CAVITY	CIRCUIT #
R1-A	A94H**
R1-B	A94D**
	A94F**
R1-C	
R1-D	A94-GB**
R1-E	A94E**
	A94A**
R2-A	A23A
R2-B	A23Y
R2-C	
R2-D	A23
R2-E	A23Y
	A23Z
R3-A	A70-G
R3-B	A70E
	A39C***
R3-C	A70B
R3-D	
R3-E	A70A
R4-A	A39-GC***
R4-B	A39C***
R4-C	
R4-D	A39B***
R4-E	A39D***
R5-A	A11-GA
	A70-G**
R5-B	A19D
	A19E
R5-C	A19A
R5-D	
R5-E	A19H
R6-A	A85A
R6-B	A85
	A85B
R6-C	A85C
R6-D	
R6-E	A85B

FUSE BLOCK

CAVITY	CIRCUIT #
F25-A	A13H
F25-B	
F26-A	A13E
F26-B	A13D
F27-A	A13C
	A13L
F27-B	A13J
	A94D**
F28-A	A13L
F28-B	
F29-A	A13T
F29-B	A23Z
F30-A	A13U
F30-B	A97UA
F31-A	A13P
F31-B	A13MS
F32-A	
F32-B	
F33-A	
F33-B	
F34-A	A94
F34-B	A94A
F35-A	A55A/A60
	A55B/60B
F35-B	A55

FUSE BLOCK

CAVITY	CIRCUIT #
F13-A	(A14A)
F13-B	A55
	A55A
F14-A	14C
F14-B	50A
F15-A	(14C)
F15-B	A50
F16-A	A19
F16-B	A15
F17-A	(A19)
	A66
F17-B	A19H
F18-A	(A13A)**
	A90U**
F18-B	
F19-A	(A13A)
	A13K
F19-B	
F20-A	A13A
F20-B	A19D
F21-A	A62
F21-B	A62A
F22-A	(A13F)
F22-B	A28/A97B
F23-A	A13F
F23-B	A39D
F24-A	(A13H)
F24-B	A71
	A13B

FUSE BLOCK

CAVITY	CIRCUIT #
F1-A	A90A**
F1-B	A90B**
	A97DK**
F2-A	A90U**
F2-B	A90T**
F3-A	A14B
F3-B	A97C
	A97HA
F4-A	(A14B)**
F4-B	
F5-A	A66
F5-B	A66A
F6-A	A12B
F6-B	A66B
F7-A	(A12)
	A12B
F7-B	A39A*
F8-A	A12
F8-B	A39*
	A12C
F9-A	(A12)
F9-B	A12D
F10-A	A13K
F10-B	A97P
	A99E
F11-A	(A14A)
F11-B	A85
F12-A	A14A
F12-B	A70B**
	A70/A97DK*

* AIR BRAKES ONLY

** HYD BRAKES ONLY

*** W/HALDEX DRAIN VALVE

CHK	DATE	CHANGE	REV	REFERENCE	DRAWN	NAME
					DMMA	PB20500
					RELEASE NO. 57780W	DATE 29MAY03

PART NO. AE08-55133 SHEET 03

Figure 224 Fuse Block Connections

Connector Composites (2), (2A), p. 4

INTERNATIONAL TRUCK AND ENGINE CORPORATION

THIS PRINT IS PROVIDED ON A RESTRICTED BASIS AND IS NOT TO BE USED IN ANY WAY DETRIMENTAL TO THE INTEREST OF INTERNATIONAL TRUCK AND ENGINE CORPORATION.

ELECTRICAL CIRCUIT DIAGRAM CHAPTER 10

CONNECTOR BODY COMPOSITE: (VIEWED FROM MATING ENDS)

DASH CONNECTOR (2)

PLATFORM HARNESS

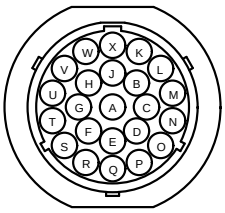

CONNECTOR - 1674090C1
CONNECTOR NUT - 0459329C1
LOCKWASHER - 0459330C1
TERNINAL PLUG - 0453133C1
TERMINAL(16,18AWG) - 1680206C1
TERMINAL(14AWG) - 1659750C1

CAVITY	CIRCUIT NO.	CAVITY	CIRCUIT NO.
A	A97UA	N	A94A**
B	A19A	O	A94H**
C	A98J(+)**	P	A97P
D	A36	Q	
E		R	A44/A39A*
F	A31A	S	A44A/A39*
G	A71	T	A40*/A94C**
H	A71A	U	A94F**
J		V	
K		W	A17F
L		X	A24H**
M			

*AIR BRAKES ONLY
**HYD ABS ONLY

CAB CONNECTOR (2A)

ENGINE HARNESS

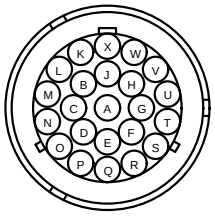

CONNECTOR - 1674091C1
TERMINAL PLUG - 0453133C1
TERMINAL(16,18AWG) - 1680205C1

CAVITY	CIRCUIT NO.	CAVITY	CIRCUIT NO.
A	K97UA	N	K94A**
B	K19A	O	K94H**
C	A98J(+)**	P	K97P
D	A36	Q	
E		R	K44/K39A
F	K31A	S	K44A/K39*
G	K71	T	K40*/K94C**
H	K71A	U	K94F**
J		V	1
K		W	K17F
L		X	K24H**
M			

*AIR BRAKES ONLY
**HYD ABS ONLY

CHK	DATE	CHANGE	REV	REFERENCE	DRAWN	NAME		
					DMMA	PB20500		
					RELEASE NO. 57780W	DATE 29MAY03	PART NO. AE08-55133	SHEET 04

Figure 225 Connector Composites (2), (2A)

Connector Composites (7), (8), (9), (10), (11), (12), p. 5

INTERNATIONAL TRUCK AND ENGINE CORPORATION

THIS PRINT IS PROVIDED ON A RESTRICTED BASIS AND IS NOT TO BE USED IN ANY WAY DETRIMENTAL TO THE INTEREST OF INTERNATIONAL TRUCK AND ENGINE CORPORATION.

ELECTRICAL CIRCUIT DIAGRAM CHAPTER 10

CONNECTOR BODY COMPOSITES: (VIEWED FROM MATING ENDS)

AUTOMATIC TRANSMISSION LIGHT (7)

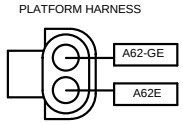

CONNECTOR - 0587568C91
TERMINAL - 0587576C1
CABLE SEAL - 1652325C1

PANEL LIGHTS (8) *

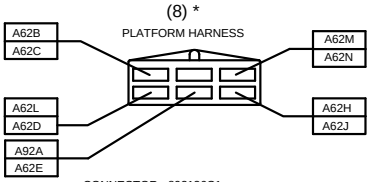

CONNECTOR - 892136C1
TERMINAL(18,20AWG) - 0879630R1
TERMINAL(18+18AWG) - 0879632R1

* ALL WIRES IN THIS CONNECTOR ARE INTERNALLY CONNECTED TOGETHER

WATER-IN-FUEL LIGHT (9)

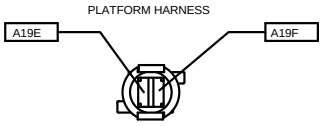

CONNECTOR - 2001688C1
TERMINAL - 2001704C1

INSTRUMENT CLUSTER - LEFT YELLOW (10)

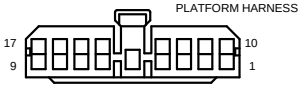

* W/HYD
** W/AIR

CONNECTOR - 1661603C1
TERMINAL - 1661598C1

CAVITY	CIRCUIT #	CAVITY	CIRCUIT #
1	A28A	10	A29/A35
2	A92	11	A97AA
3	*A90N / **A40A	12	A97T
4	A28K	13	---
5	A28D	14	---
6	A28-GA	15	A62-GA
7	A26A	16	A26
8	A62B	17	A31A
9	---		

INSTRUMENT CLUSTER - CENTER GREEN (11)

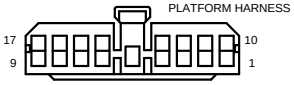

CONNECTOR - 1661602C1
TERMINAL - 1661598C1

CAVITY	CIRCUIT #	CAVITY	CIRCUIT #
1	A62C	10	A28B
2	A28-G	11	A62-GB
3	A36	12	A57B
4	A52A	13	---
5	---	14	---
6	A56B	15	---
7	A98E(+)	16	---
8	---	17	---
9	A98F(-)		

INSTRUMENT CLUSTER RIGHT NATURAL (12)

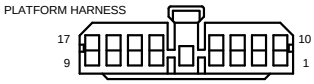

* W/HYD

CONNECTOR - 1661601C1
TERMINAL - 1661598C1

CAVITY	CIRCUIT #	CAVITY	CIRCUIT #
1	A62D	10	A62-GC
2	---	11	---
3	A28-GB	12	---
4	---	13	A28H
5	---	14	---
6	---	15	---
7	---	16	---
8	A28C	17	* A44A
9	---		

CHK	DATE	CHANGE	REV	REFERENCE	DRAWN	NAME		
					MDL3	PB20500		
					RELEASE NO. 57780W	DATE 02JUN03	PART NO. AE08-55133	SHEET 05

Figure 226 Connector Composites (7), (8), (9), (10), (11), (12)

Connector Composites (13), (15), (15A), p. 6

INTERNATIONAL TRUCK AND ENGINE CORPORATION

THIS PRINT IS PROVIDED ON A RESTRICTED BASIS AND IS NOT TO BE USED IN ANY WAY DETRIMENTAL TO THE INTEREST OF INTERNATIONAL TRUCK AND ENGINE CORPORATION.

ELECTRICAL CIRCUIT DIAGRAM CHAPTER 10

CONNECTOR BODY COMPOSITE; (VIEWED FROM MATING ENDS)

TURN SIGNAL SWITCH (13)

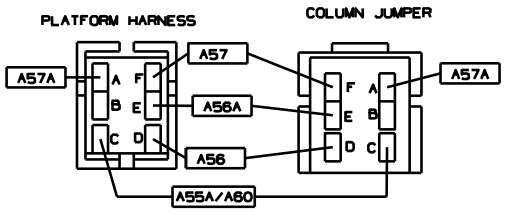

CONNECTOR - 1661200C1
TERMINAL - 1661209C1

CONNECTOR - 1661201C1
TERMINAL(16AWG) - 1661213C1
TERMINAL(16+16AWG) - 1661214C1

ENGINE CAB CONN (15)

PLATFORM HARNESS

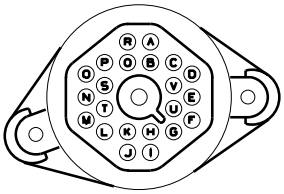

CONNECTOR - 0593389C1
CONN LOCK(2 REQD) - 0598333C1
TERMINAL(14,16AWG) - 0587575C1
TERMINAL(18AWG) - 0587576C1
TERMINAL(12AWG) - 1673747C1
CABLE SEAL(16,20AWG) - 1652325C1
CABLE SEAL(14AWG) - 0589391C1
CABLE SEAL(12AWG) - 0589390C1

CAVITY	CIRCUIT	CAVITY	CIRCUIT
A	A97N	L	A26
B		M	A26A
C	A3+	N	A99D
D	A3-	O	A97Z
E	A97ACE	P	A99B
F	A97HA	Q	A97(5V)
G		R	A97M
H		S	A97CD
I	A23A	T	
J	A39B	U	A23
K		V	

ENGINE CAB CONN (15A)

ENGINE HARNESS

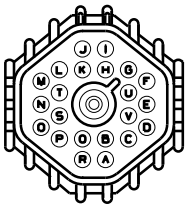

CONNECTOR - 0589332C1
CONN LOCK(2 REQD) - 0589333C1
TERMINAL(14,16AWG) - 0587577C1
TERMINAL(18,20AWG) - 0587578C1
CAVITY PLUG - 0587579C1
CABLE SEAL(16,20AWG) - 1652325C1
CABLE SEAL(14 AWG) - 0589391C1

CAVITY	CIRCUIT	CAVITY	CIRCUIT
A	K97N	L	K26
B		M	K26A
C	K3A+	N	K99D
D	K3A-	O	K97Z
E	K97ACE	P	K99B
F	K97HA	Q	K97
G		R	K97M
H		S	K97CD
I	K23A	T	
J	K39B	U	K23
K		V	

CHK	DATE	CHANGE	REV	REFERENCE	DRAWN	NAME
CNA	30AUG06	ADDED CIRCUITS A97ACE AND K97ACE.	A	60540L	MDL3	CONNECTOR COMPOSITES, PB20500
					RELEASE NO. 57780W	DATE 02JUN03 PART NO. AE08-55133 SHEET 006

Figure 227 Connector Composites (13), (15), (15A)

Connector Composites (20), (22), (23), (26), (27), p. 7

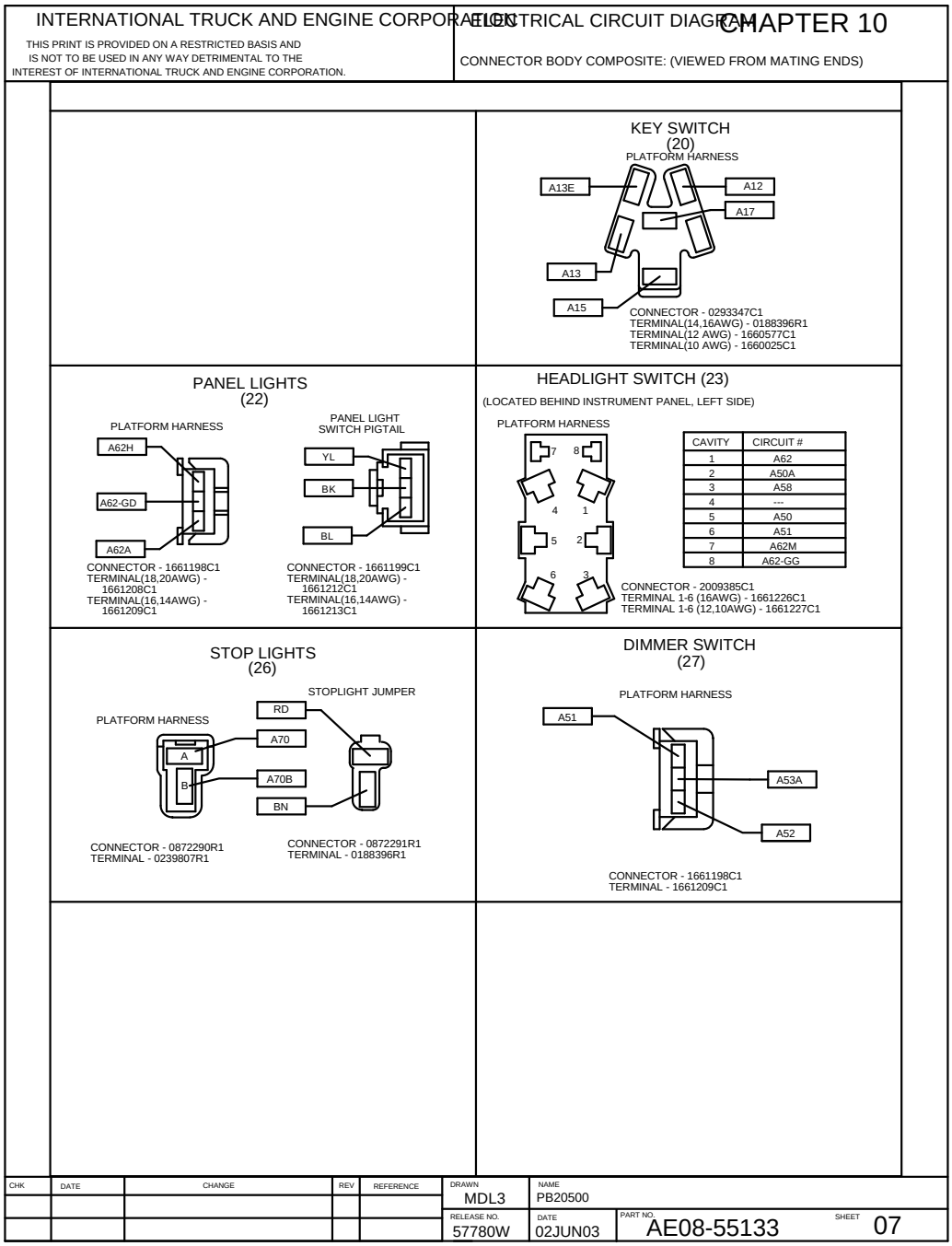

CAVITY	CIRCUIT #
1	A62
2	A50A
3	A58
4	---
5	A50
6	A51
7	A62M
8	A62-GG

Figure 228 Connector Composites (20), (22), (23), (26), (27)

Connector Composites (32), (37), (38), (40), (41), p. 8

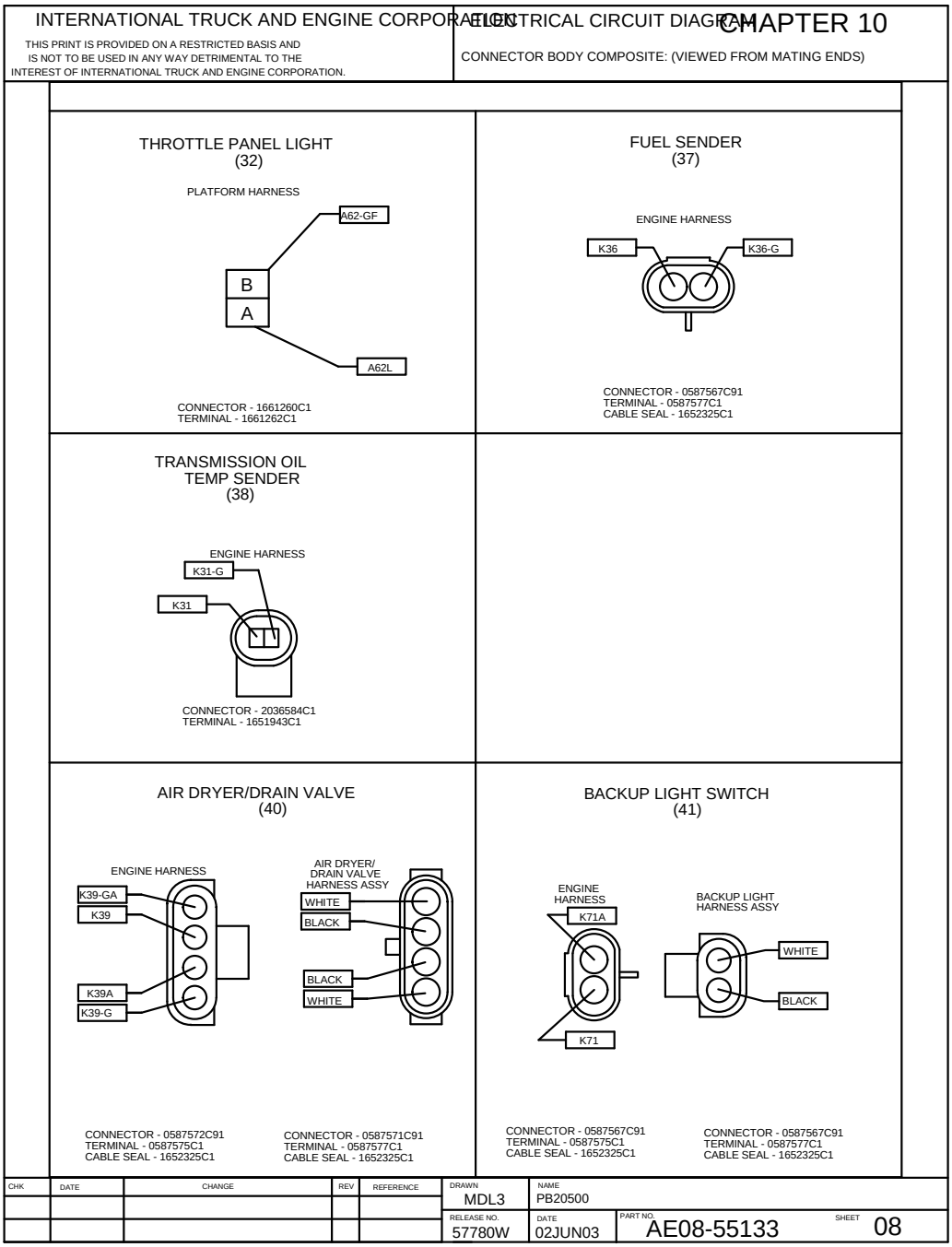

Figure 229 Connector Composites (32), (37), (38), (40), (41)

Connector Composites (41F), (44), (44M), (45), (46), (51), (64), (76), p. 9

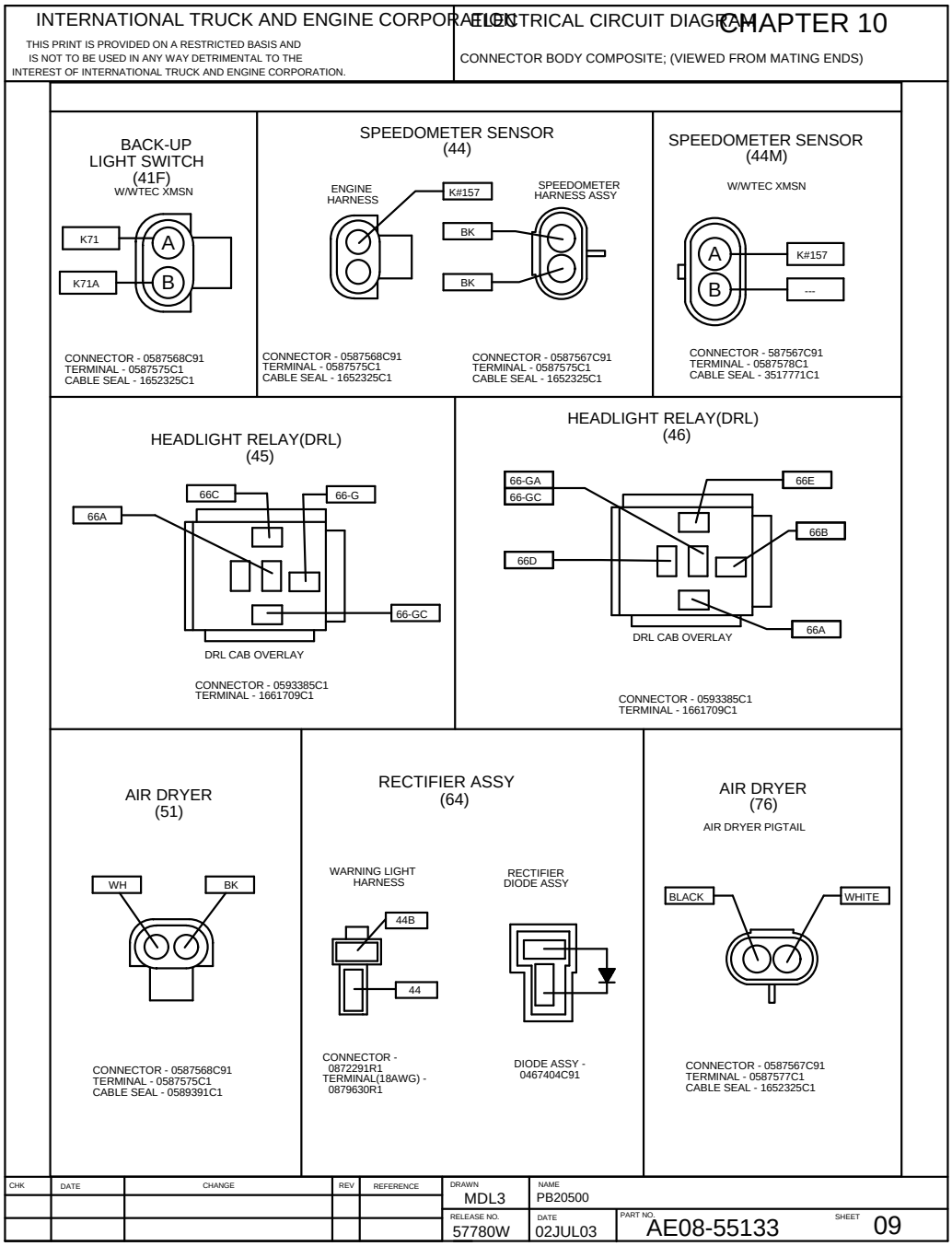

Figure 230 Connector Composites (41F), (44), (44M), (45), (46), (51), (64), (76)

Connector Composites (80), (81), (82), (83A), p. 10

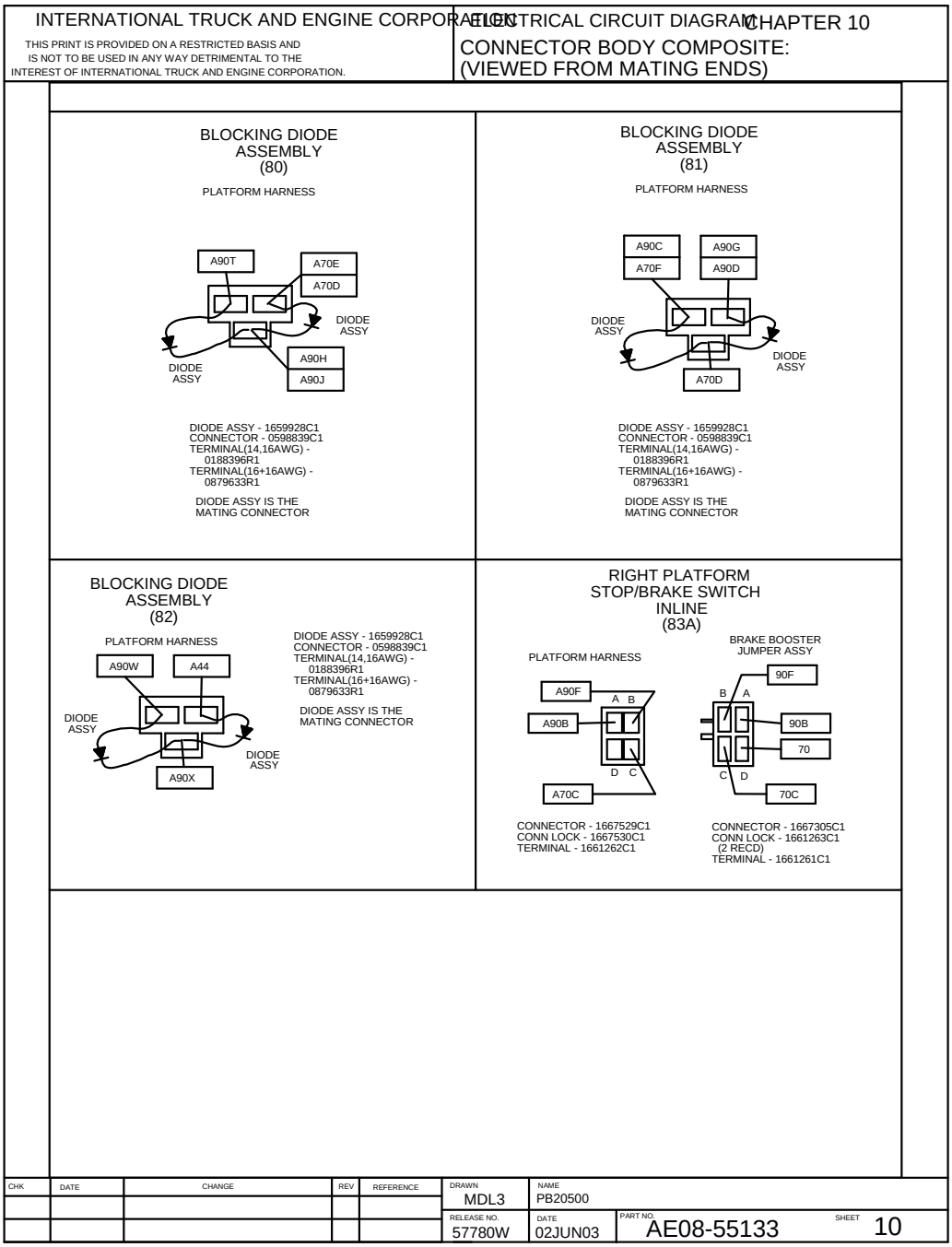

Figure 231 Connector Composites (80), (81), (82), (83A)

Connector Composites (83), (85), (49), (87), (88), p. 11

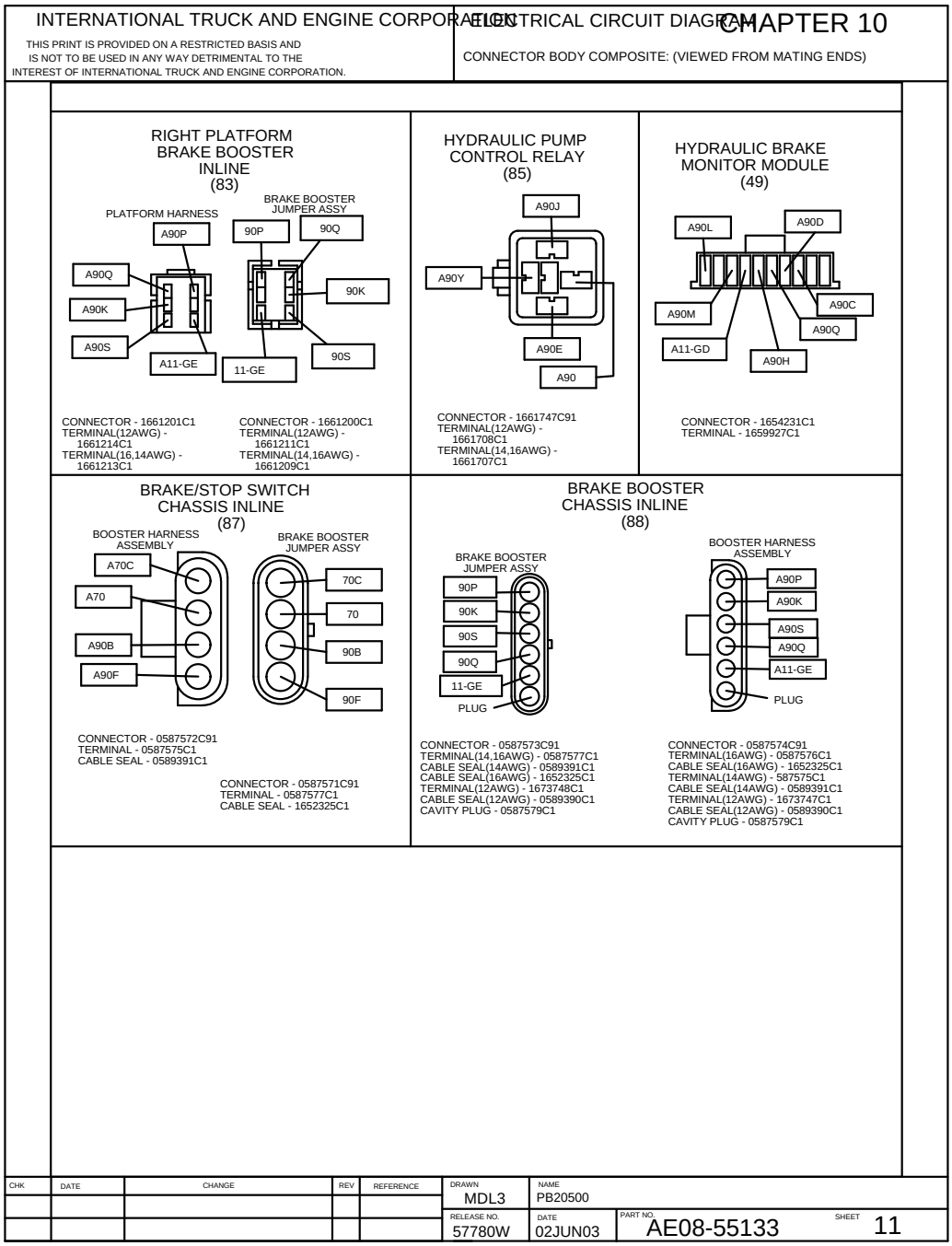

Figure 232 Connector Composites (83), (85), (49), (87), (88)

Connector Composites (89), (90), (91), (92), (93), (94), (165), (168), p. 12

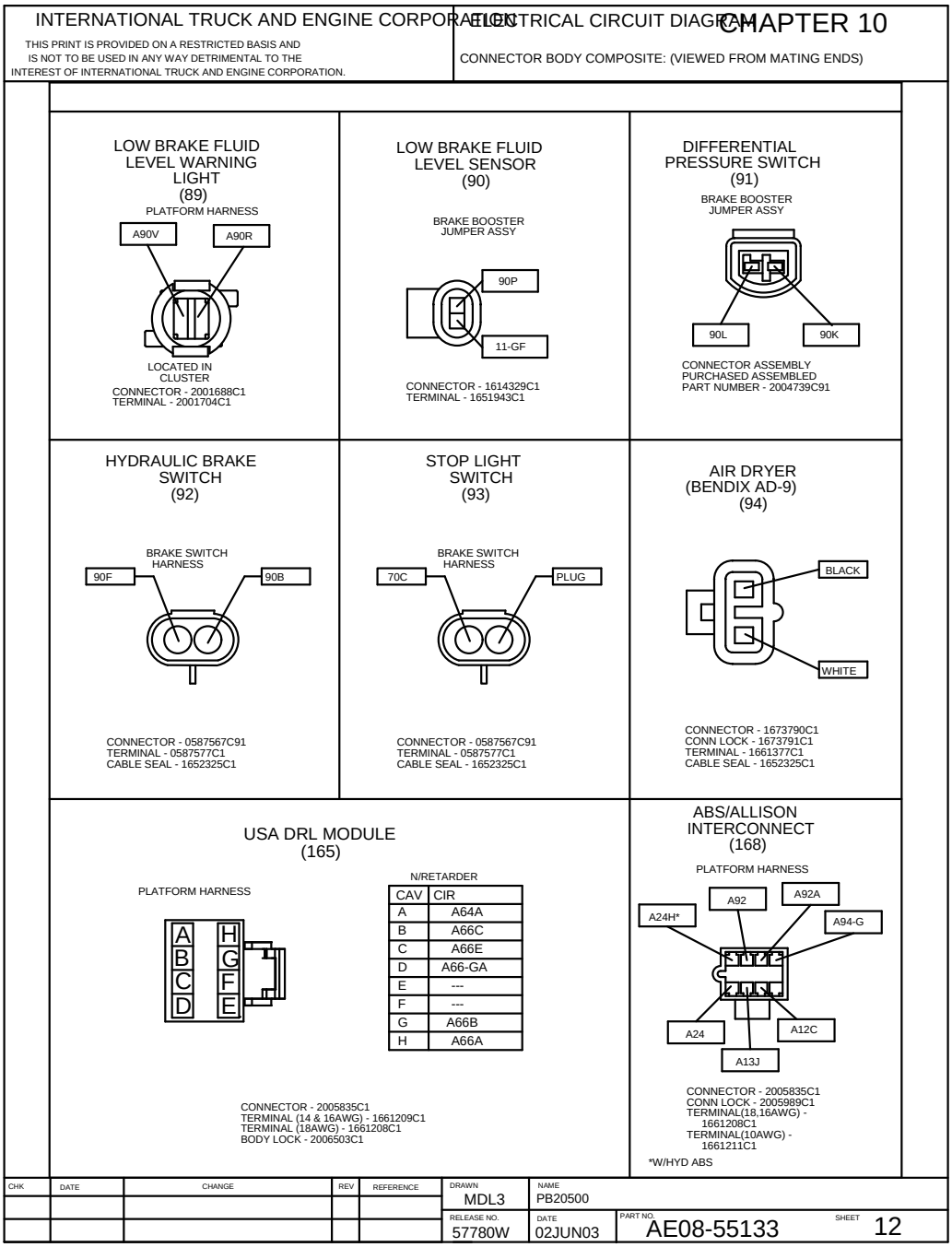

Figure 233 Connector Composites (89), (90), (91), (92), (93), (94), (165), (168)

Connector Composites (168), (169), (170), (209), (218), (224), (258), p. 13

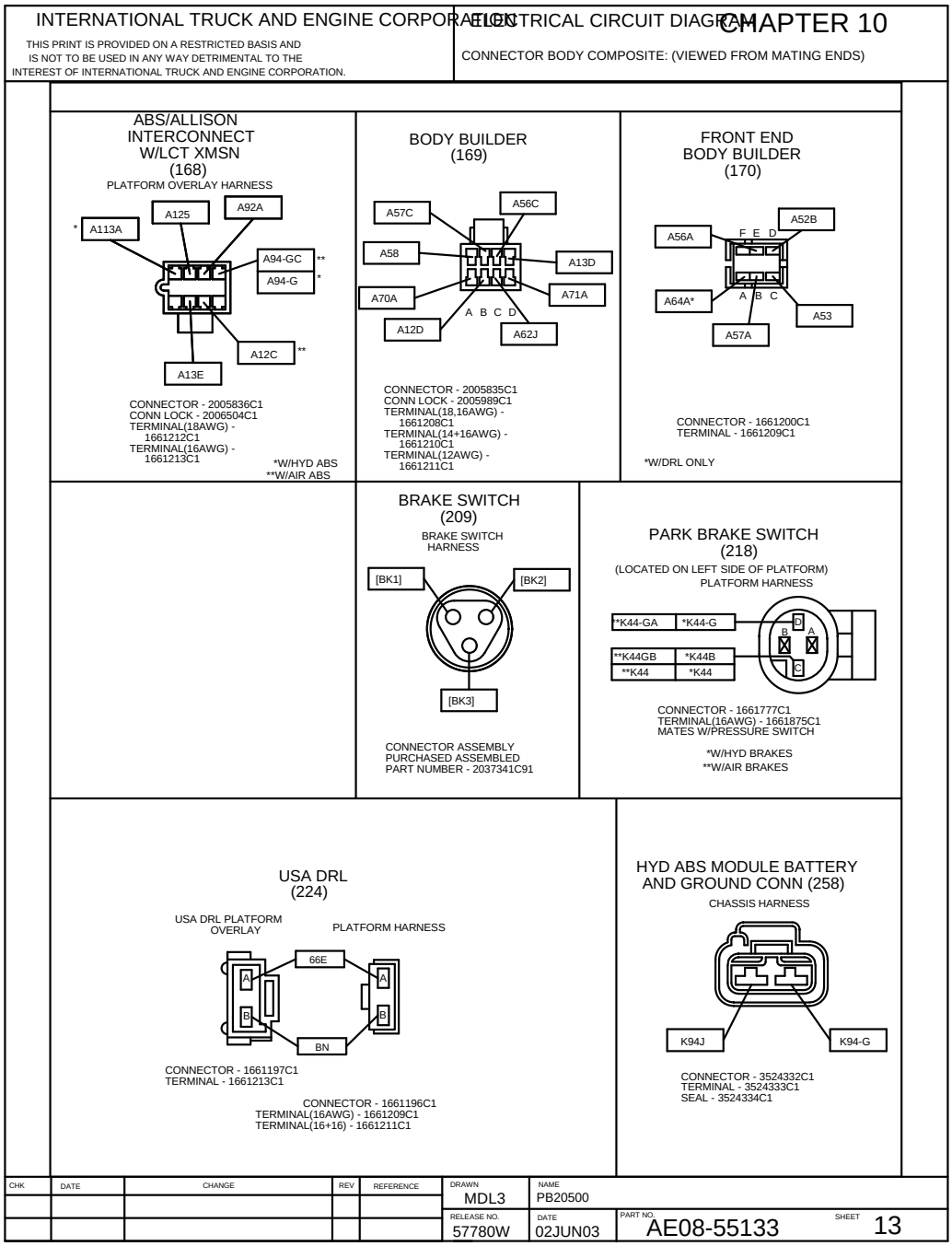

Figure 234 Connector Composites (168), (169), (170), (209), (218), (224), (258)

Connector Composites (261), (279), (283), (284), p. 14

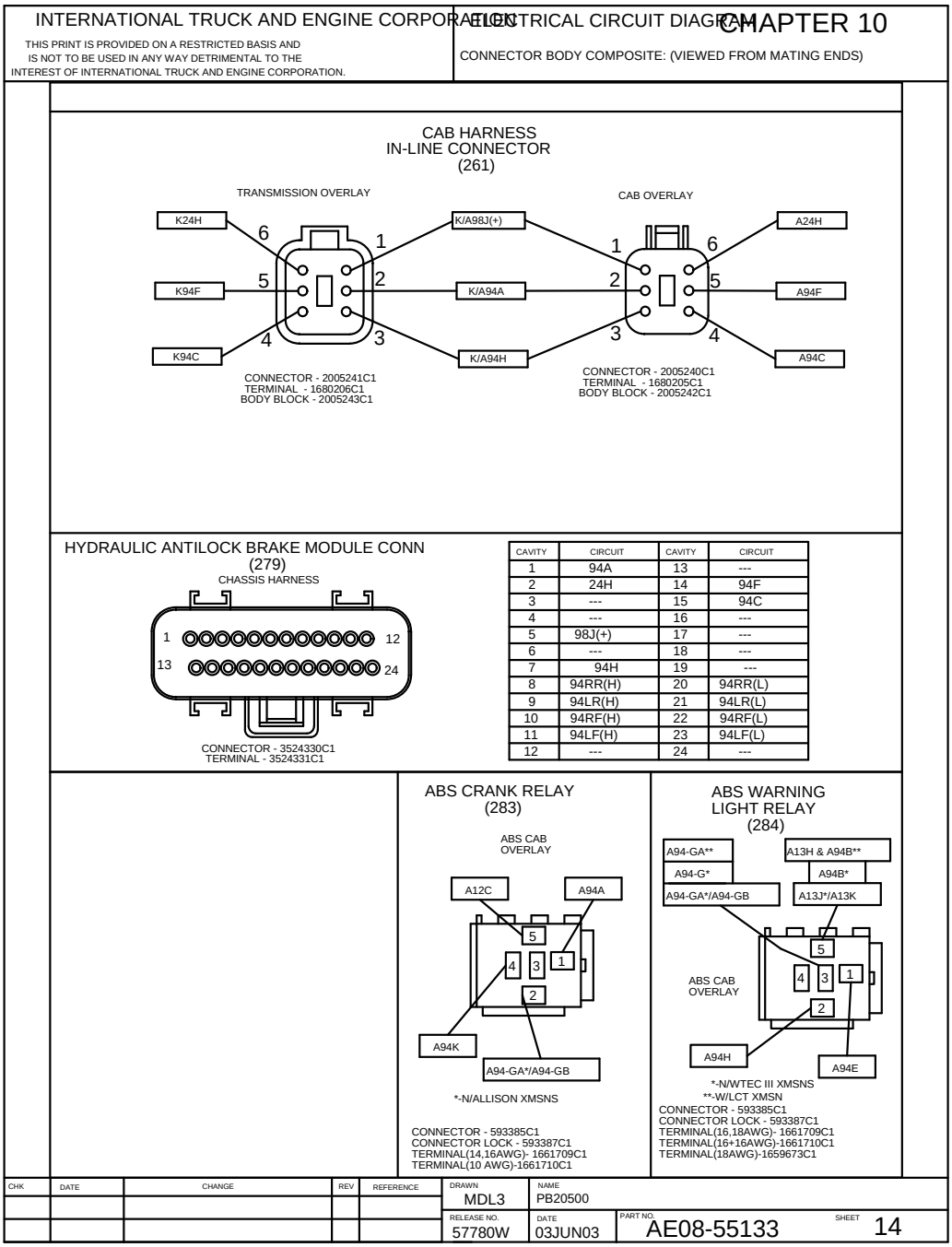

CAVITY	CIRCUIT	CAVITY	CIRCUIT
1	94A	13	---
2	24H	14	94F
3	---	15	94C
4	---	16	---
5	98J(+)	17	---
6	---	18	---
7	94H	19	---
8	94RR(H)	20	94RR(L)
9	94LR(H)	21	94LR(L)
10	94RF(H)	22	94RF(L)
11	94LF(H)	23	94LF(L)
12	---	24	---

Figure 235 Connector Composites (261), (279), (283), (284)

Connector Composites (288), (289), (290), (291), (292), (293), (295), (297), (303F), (304), p. 15

INTERNATIONAL TRUCK AND ENGINE CORPORATION

THIS PRINT IS PROVIDED ON A RESTRICTED BASIS AND IS NOT TO BE USED IN ANY WAY DETRIMENTAL TO THE INTEREST OF INTERNATIONAL TRUCK AND ENGINE CORPORATION.

ELECTRICAL CIRCUIT DIAGRAM CHAPTER 10

CONNECTOR BODY COMPOSITES; (VIEWED FROM MATING END)

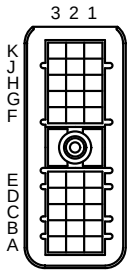

ABS ECU (288)

CAVITY	CIRCUIT	CAVITY	CIRCUIT	CAVITY	CIRCUIT
A1	N94-GB	E1	VT/WH S	J1	VT/WH S
A2	N94-GC	E2	PLUG	J2	OR/WHS
A3	N94-GD	E3	GY	J3	PLUG
	TN	F1	BK/WH S	K1	YL
B2	PLUG		PLUG	K2	LT GN
B3	PLUG	F3	PLUG	K3	BN
C1	LTGN/WH S	G1	BN/WH S		
C2	PLUG	G2	RD		
C3	PLUG	G3	DKBL		
D1	LTBL/WH S	H1	RD/WH S		
D2	PLUG	H2	DKBL/WH S		
D3	PLUG	H3	YL/WH S		

AIR ABS LEFT FRONT WHEEL SPEED SENSOR (289)

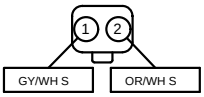

CONNECTOR - 1684261C1
CONN LOCK - 1684263C1
TERMINAL - 1680205C1

HYD ABS LEFT FRONT WHEEL SPEED SENSOR (289)

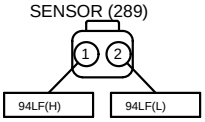

CONNECTOR - 3539777C1
CONN LOCK - 3539784C1
TERMINAL - 1651969C1

AIR ABS LEFT FRONT MODULATOR VALVE (290)

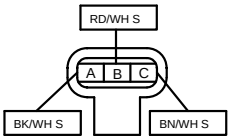

CONNECTOR - 1686834C1
CONN LOCK - 1664408C1
TERMINAL - 2033911C1

AIR ABS RIGHT FRONT MODULATOR VALVE (291)

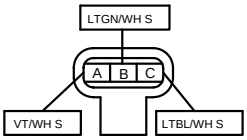

CONNECTOR - 1686834C1
CONN LOCK - 1664408C1
TERMINAL - 2033911C1

AIR ABS RIGHT FRONT WHEEL SPEED SENSOR (292)

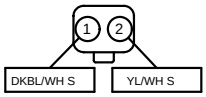

CONNECTOR - 1684261C1
CONN LOCK - 1684263C1
TERMINAL - 1680205C1

HYD ABS RIGHT FRONT WHEEL SPEED SENSOR (292)

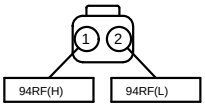

CONNECTOR - 3539777C1
CONN LOCK - 3539784C1
TERMINAL - 1651969C1

HYD ABS LEFT REAR WHEEL SPEED SENSOR (293)

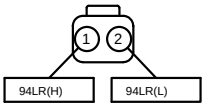

CONNECTOR - 3539777C1
CONN LOCK - 3539784C1
TERMINAL - 1651969C1

HYD ABS RIGHT REAR WHEEL SPEED SENSOR (295)

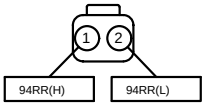

CONNECTOR - 3539777C1
CONN LOCK - 3539784C1
TERMINAL - 1651969C1

ABS WARNING LIGHT (297)

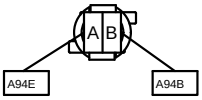

CONNECTOR - 2001688C1
TERMINAL - 2001704C1

SPEEDOMETER W/LCT XMSN (303F)

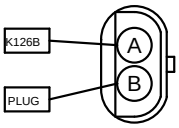

CONNECTOR - 0587567C91
TERMINAL - 0587578C1
SEALING PLUG - 0587579C1

BACKUP LIGHT SWITCH (304)

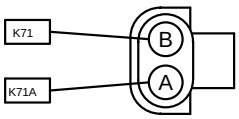

CONNECTOR - 0587568C91
TERMINAL - 0587575C1

CHK	DATE	CHANGE	REV	REFERENCE	DRAWN	NAME		
					MDL3	PB20500		
					RELEASE NO. 57780W	DATE 03JUN03	PART NO. AE08-55133	SHEET 15

Figure 236 Connector Composites (288), (289), (290), (291), (292), (293), (295), (297), (303F), (304)

Connector Composites (323), (329), p. 16

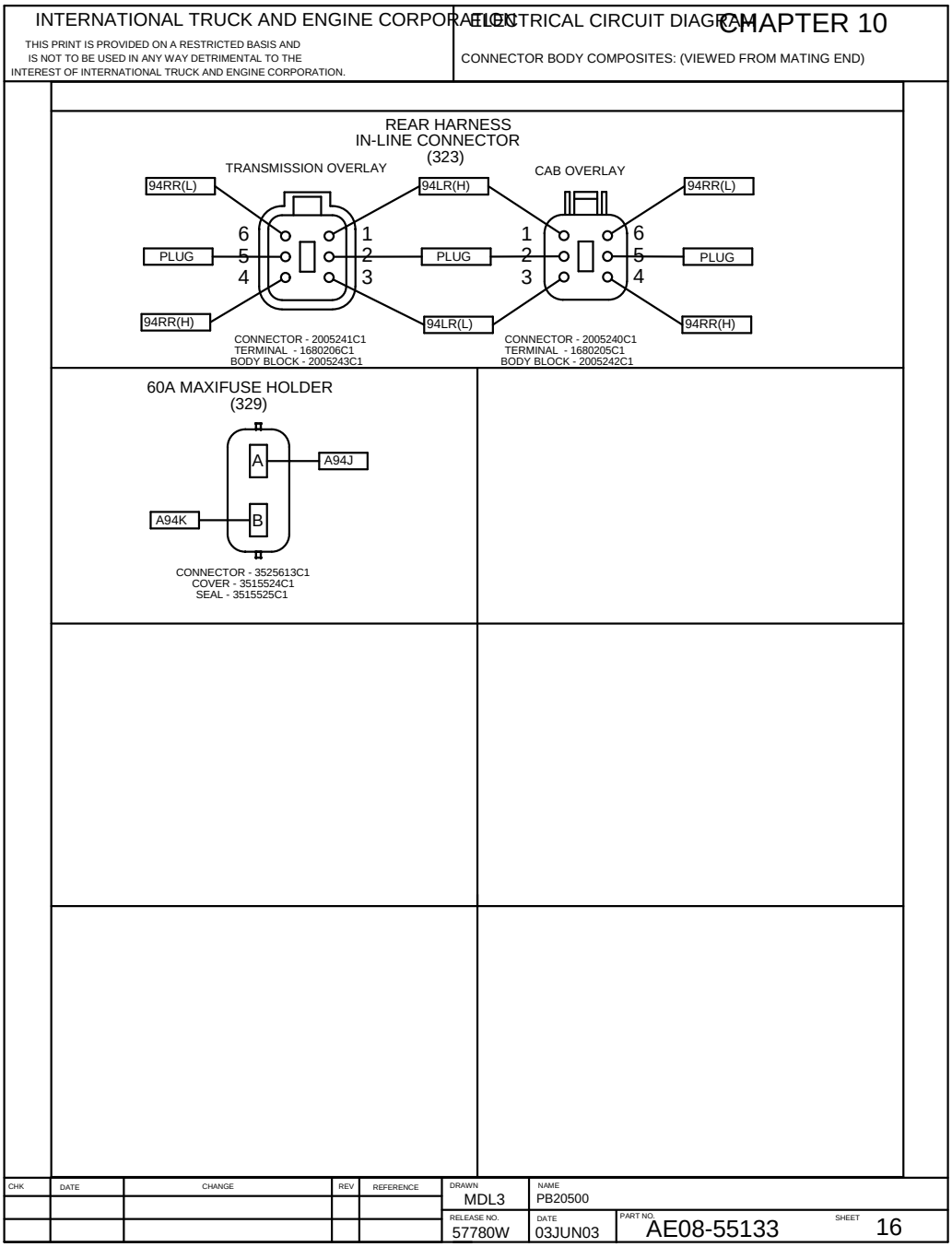

Figure 237 Connector Composites (323), (329)

Connector Composites (350), (351), (352), (353), (354), p. 17

INTERNATIONAL TRUCK AND ENGINE CORPORATION

THIS PRINT IS PROVIDED ON A RESTRICTED BASIS AND IS NOT TO BE USED IN ANY WAY DETRIMENTAL TO THE INTEREST OF INTERNATIONAL TRUCK AND ENGINE CORPORATION.

ELECTRICAL CIRCUIT DIAGRAM

CHAPTER 10

CONNECTOE BODY COMPOSITES; (VIEWED FROM MATING END)

ABS ECU (350)

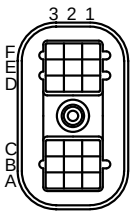

CONNECTOR - 2010376C1
TERMINAL - 1651943C1
CAVITY PLUG - 1687788C1

CAVITY	CIRCUIT	CAVITY	CIRCUIT
A1	LTGN/WH	D1	BK/WH
A2	PLUG	D2	PLUG
A3	PLUG	D3	PLUG
B1	LTBL/WH	E1	BN/WH
B2	PLUG	E2	YL/WH
B3	PLUG	E3	DKBL/WH
C1	VT/WH	F1	RD/WH
C2	PLUG	F2	OR/WH
C3	PLUG	F3	GY/WH

ABS LEFT REAR WHEEL SPEED SENSOR (351)

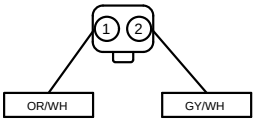

CONNECTOR - 1684261C1
CONN LOCK - 1684263C1
TERMINAL - 1680205C1

ABS RIGHT REAR WHEEL SPEED SENSOR (352)

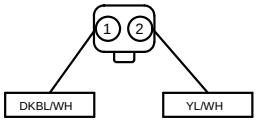

CONNECTOR - 1684261C1
CONN LOCK - 1684263C1
TERMINAL - 1680205C1

ABS LEFT REAR MODULATOR VALVE (353)

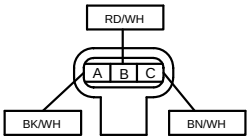

CONNECTOR - 1686834C1
CONN LOCK - 1664408C1
TERMINAL - 2033819C1
SEAL - 1652325C1

ABS RIGHT REAR MODULATOR VALVE (354)

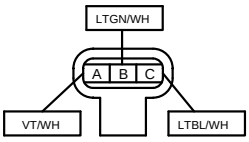

CONNECTOR - 1686834C1
CONN LOCK - 1664408C1
TERMINAL - 2033819C1
SEAL - 1652325C1

CHK	DATE	CHANGE	REV	REFERENCE	DRAWN	NAME		
					MDL3	PB20500		
					RELEASE NO. 57780W	DATE 03JUN03	PART NO. AE08-55133	SHEET 17

Figure 238 Connector Composites (350), (351), (352), (353), (354)

Connector Composites (373), (374), p. 18

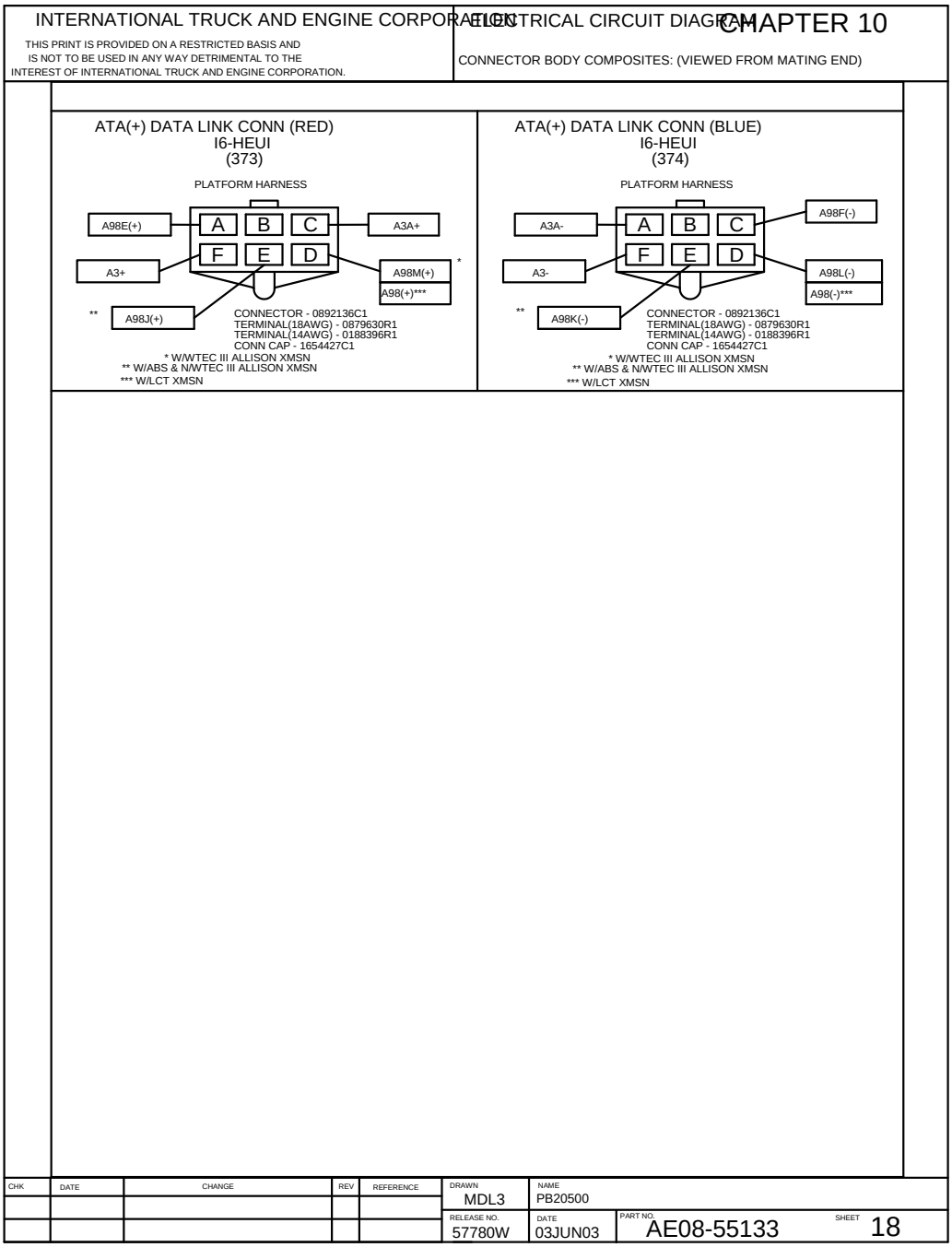

Figure 239 Connector Composites (373), (374)

Connector Composites (382), (384), (387M), (388F), (391), (392), p. 19

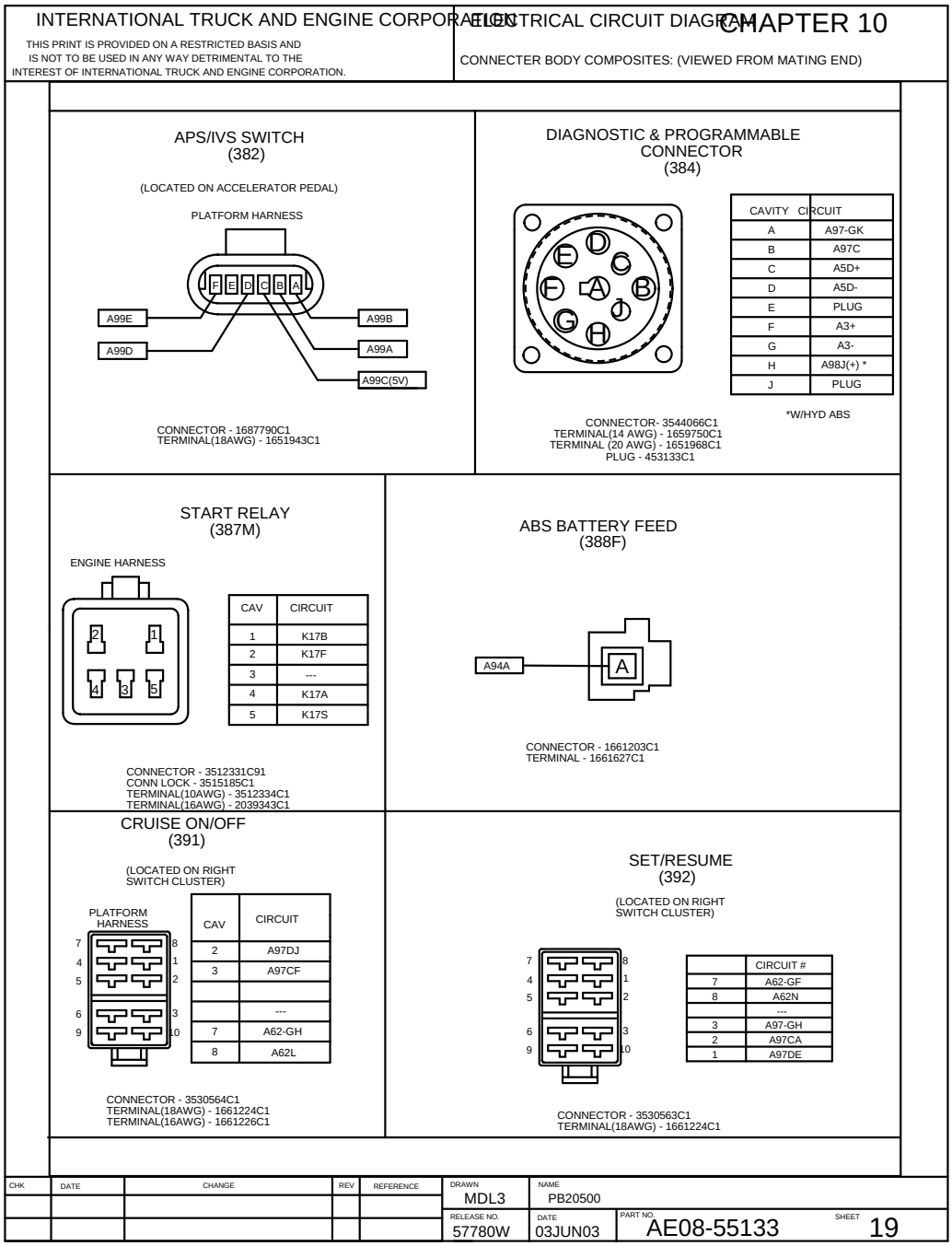

Figure 240 Connector Composites (382), (384), (387M), (388F), (391), (392)

Connector Composites (396G), (396), (406), (420), (422), (426/A), p. 20

INTERNATIONAL TRUCK AND ENGINE CORPORATION

THIS PRINT IS PROVIDED ON A RESTRICTED BASIS AND IS NOT TO BE USED IN ANY WAY DETRIMENTAL TO THE INTEREST OF INTERNATIONAL TRUCK AND ENGINE CORPORATION.

ELECTRICAL CIRCUIT DIAGRAM CHAPTER 10

CONNECTOR BODY DIAGRAMS: (VIEWED FROM MATING ENDS)

ECM1 MODULE RELAY (396G)

ENGINE HARNESS

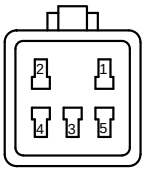

CAV	CIRCUIT
1	K97TC
2	K97LA
3	PLUG
4	K97TD
5	K97LB

CONNECTOR - 3512331C91
CONN LOCK - 3515185C1
TERMINAL(10AWG) - 3512334C1
TERMINAL(16AWG) - 2039343C1

ECM2 MODULE RELAY (396)

ENGINE HARNESS

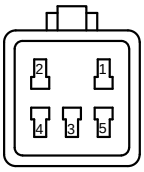

CAV	CIRCUIT
1	K97HA
2	K97J
3	---
4	K97H
5	K97JA

CONNECTOR - 3512331C91
CONN LOCK - 3515185C1
TERMINAL(10AWG) - 3512334C1
TERMINAL(16AWG) - 2039343C1

BAP SENSOR CONNECTOR (406)

(LOCATED IN CAB)

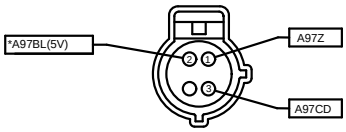

CONNECTOR - 2016703C1
CONN LOCK - 2016704C1
TERMINAL(16AWG,18AWG) - 2003343C1

SHIFT SELECTOR (420)

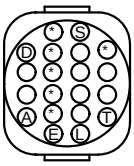

CAVITY	CIRCUIT	CAVITY	CIRCUIT	
A	A170	L	PLUG	
B	A171	M	A175	
C	A172	N	A124	
D	A173	P	A143A	
E	A174	R	A136A	
F	SEALED	S	A180	
G	SEALED	T	A186	
H	SEALED	U	A187	
J	SEALED	V	A188	
K	SEALED	W	SEALED	

SEALED

CONNECTOR ASSY-3522536C91
TERMINAL-3517243C1
CONNECTOR LOCK-35182287C1
CAVITY PLUG-3517247C1

AIR OR HYD ABS WARNING LIGHT (422)

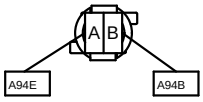

CONNECTOR - 2001688C1
TERMINAL - 2001704C1

ENG HARNESS PWR & GND IN-LINE CONN W/WTEC III XMSNS (426/A)

BATTERY HARNESS (WTEC III XMSN HARNESS) (426AF)

ENGINE HARNESS (WTEC III XMSN HARNESS) (426M)

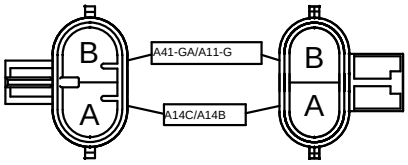

CONNECTOR-2031520C1
TERMINAL-2025421C1
CABLE SEAL-2025429C1

CONNECTOR-2031522C1
TERMINAL-2031531C1
CABLE SEAL-2025427C1

CHK	DATE	CHANGE	REV	REFERENCE	DRAWN MDL3	NAME PB20500		
					RELEASE NO. 57780W	DATE 03JUN03	PART NO. AE08-55133	SHEET 20

Figure 241 Connector Composites (396G), (396), (406), (420), (422), (426/A)

Connector Composites (428), (433), (434), (438), (450), (451), p. 21

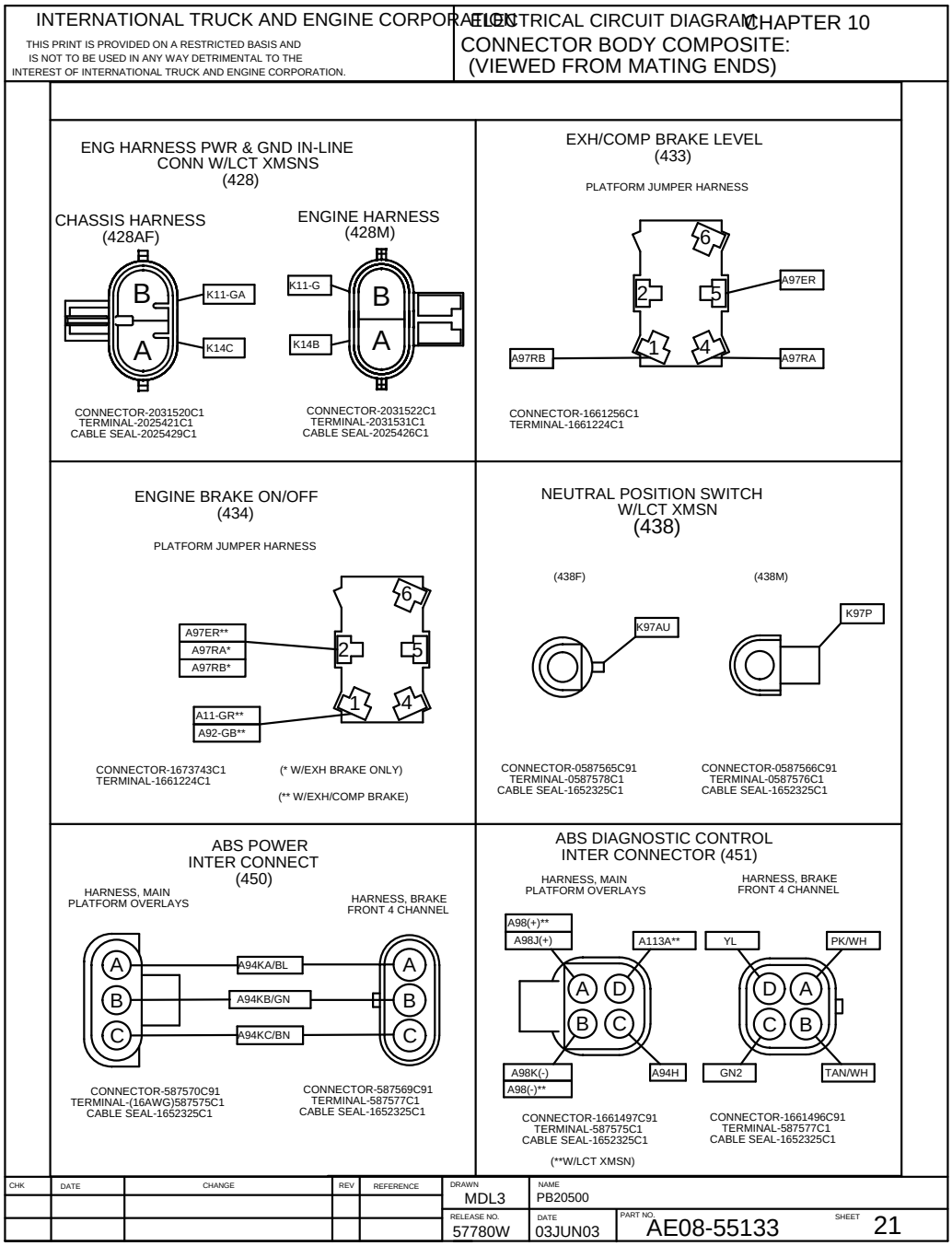

Figure 242 Connector Composites (428), (433), (434), (438), (450), (451)

Connector Composites (466), (499), (523), p. 22

INTERNATIONAL TRUCK AND ENGINE CORPORATION

THIS PRINT IS PROVIDED ON A RESTRICTED BASIS AND IS NOT TO BE USED IN ANY WAY DETRIMENTAL TO THE INTEREST OF INTERNATIONAL TRUCK AND ENGINE CORPORATION.

ELECTRICAL CIRCUIT DIAGRAM CHAPTER 10

CONNECTOR BODY COMPOSITE: (VIEWED FROM MATING ENDS)

ALLISON AUTOMATIC TRANSMISSION (ELECTRONIC)
SPARE I/O CONNECTOR

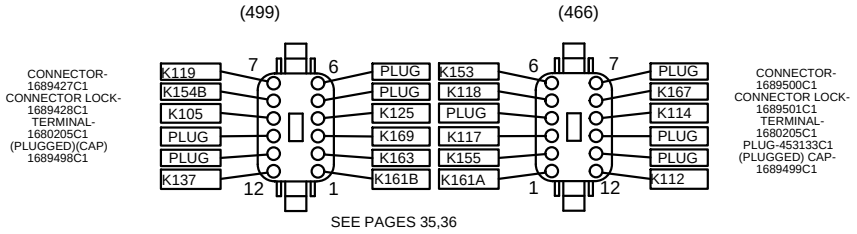

SEE PAGES 35,36

XMSN/PLATFORM HARNESS INTERCONNECT
(523)

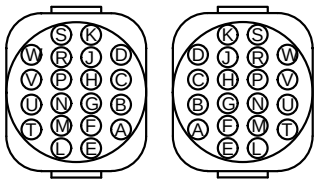

CONNECTOR-3522538C91
TERMINAL-3518291C1
CONNECTOR LOCK-3518289C1
PLUG-3517247C1

CONNECTOR-3522537C91
TERMINAL-3517243C1
CONNECTOR LOCK-3518287C1
PLUG-3517247C1

CAVITY	CIRCUIT	CAVITY	CIRCUIT
A	A/K170	L	A/K161E
B	A/K171	M	A/K142(+)
C	A/K172	N	A/K151(-)
D	A/K173	P	A/K115
E	A/K174	R	A/K146
F	A/K175	S	A/K154A
G	A/K180	T	PLUG
H	A/K124	U	PLUG
J	A/K143A	V	PLUG
K	A/K136A	W	PLUG

CHK	DATE	CHANGE	REV	REFERENCE	DRAWN	NAME		
					MDL3	PB20500		
					RELEASE NO. 57780W	DATE 03JUN03	PART NO. AE08-55133	SHEET 22

Figure 243 Connector Composites (466), (499), (523)

Connector Composites (569), (3084R), (571A/646A), (3084B), (6012/646), (574), p. 23

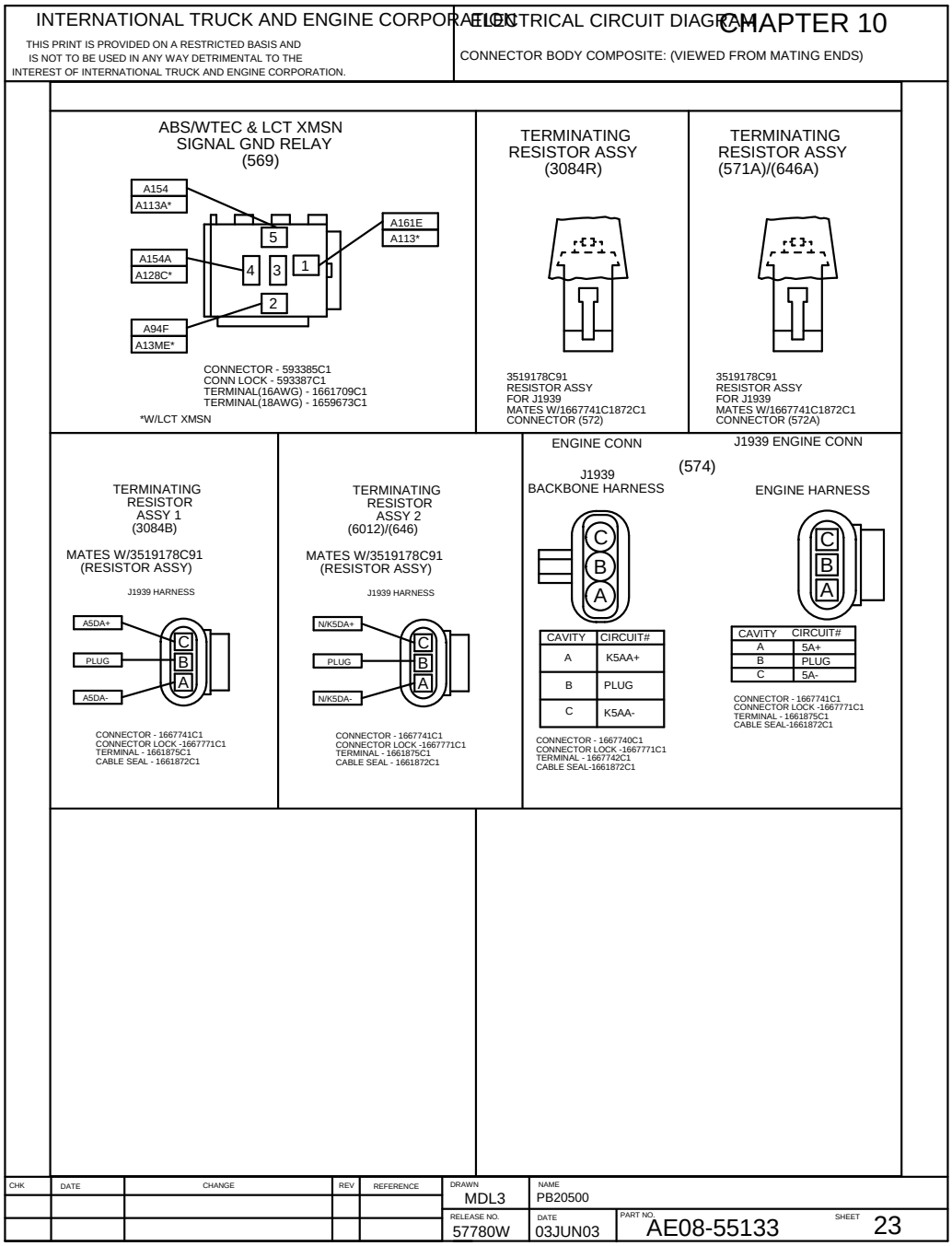

Figure 244 Connector Composites (569), (3084R), (571A/646A), (3084B), (6012/646), (574)

Connector Composites (637), (639), p. 24

INTERNATIONAL TRUCK AND ENGINE CORPORATION

THIS PRINT IS PROVIDED ON A RESTRICTED BASIS AND IS NOT TO BE USED IN ANY WAY DETRIMENTAL TO THE INTEREST OF INTERNATIONAL TRUCK AND ENGINE CORPORATION.

ELECTRICAL CIRCUIT DIAGRAM CHAPTER 10

CONNECTOR BODY COMPOSITE: (VIEWED FROM MATING ENDS)

WTEC TRANSMISSION BULKHEAD
(637)

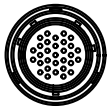

CONNECTOR-3508928C1
TERMINAL-3508927C1
PLUG-453133C1
BACKSHELL HOUSING-3508929C1
BACKSHELL FOLLOWER-3508930C1
BACKSHELL GROMMET-3508931C1

CAVITY	CIRCUIT#	CAVITY	CIRCUIT#	CAVITY	CIRCUIT#		
A	K102	M	K131	Y	K165		
B	K103	N	K135A	Z	PLUG		
C	K104	P	K147	a	PLUG		
D	K124A	Q	PLUG	b	PLUG		
E	K107	R	PLUG	c	PLUG		
F	K110	S	PLUG	d	PLUG		
G	K120	T	PLUG	e	PLUG		
H	K121	U	K140A	f	PLUG		
J	K128	V	K149A	g	PLUG		
K	K129	W	K195				
L	K130	X	K162				

TRANSMISSION BACKUP RELAY
(639)

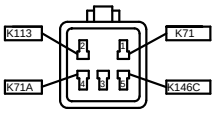

CONNECTOR-3512331c91
TERMINAL(18,16AWG)-2039343C1
CONNECTOR LOCK-3515185C1

MATES W/RELAY 3505300C1

CHK	DATE	CHANGE	REV	REFERENCE	DRAWN	NAME		
					MDL3	PB20500		
					RELEASE NO. 57780W	DATE 03JUN03	PART NO. AE08-55133	SHEET 24

Figure 245 Connector Composites (637), (639)

Connector Composites (644F), (646), (748), (749), p. 25

INTERNATIONAL TRUCK AND ENGINE CORPORATION

THIS PRINT IS PROVIDED ON A RESTRICTED BASIS AND IS NOT TO BE USED IN ANY WAY DETRIMENTAL TO THE INTEREST OF INTERNATIONAL TRUCK AND ENGINE CORPORATION.

ELECTRICAL CIRCUIT DIAGRAM CHAPTER 10

CONNECTOR BODY COMPOSITE: (VIEWED FROM MATING ENDS)

ENGINE/EXHAUST BRAKE CONN
(644F)

LOCATED ON PLATFORM HARNESS

CAV	CIR	GAUGE	COLOR	TERM
A	A11-GR	16	WH	1661261C1
B	A97RA	18	VT	1661261C1
C	A97RB	18	VT	1661261C1
D	A62K	18	DK BL	1661261C1

CONNECTOR - 1667305C1

XMSN INTERCONNECT
(646)
WTEC XMSN HARNESS

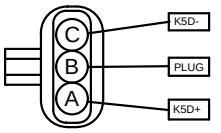

CONNECTOR-1667740C1
TERMINAL(18WAG)-1667742C1
CONN LOCK-1667771C1
SEAL-1661872C1

MATES W/J1939 HARNESS CONNECTOR
(575)

HALDEX DRAIN VALVE
IN-LINE CONN
(748)

ENGINE HARNESS

DRAIN VALVE CHASSIS HARNESS

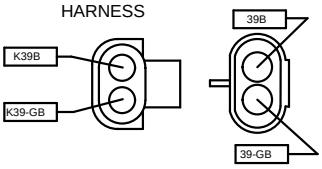

CONNECTOR - 0587568C91
TERMINAL - 0587576C1
CABLE SEAL - 1652325C1

CONNECTOR - 0587567C91
TERMINAL - 0587577C1
CABLE SEAL - 1652325C1

HALDEX
DRAIN VALVE
(749)

DRAIN VALVE CHASSIS HARNESS

DRAIN VALVE HARNESS ASSY

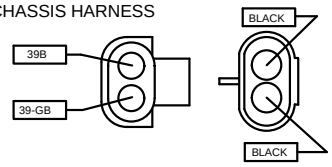

CONNECTOR - 0587568C91
TERMINAL - 0587575C1
CABLE SEAL - 1652325C1

CONNECTOR - 0587567C91
TERMINAL - 0587577C1
CABLE SEAL - 1652325C1

CHK	DATE	CHANGE	REV	REFERENCE	DRAWN	NAME		
					MDL3	PB20500		
					RELEASE NO. 57780W	DATE 03JUN03	PART NO. AE08-55133	SHEET 25

Figure 246 Connector Composites (644F), (646), (748), (749)

Connector Composites (750), (832), (836), (1002), (1133), p. 26

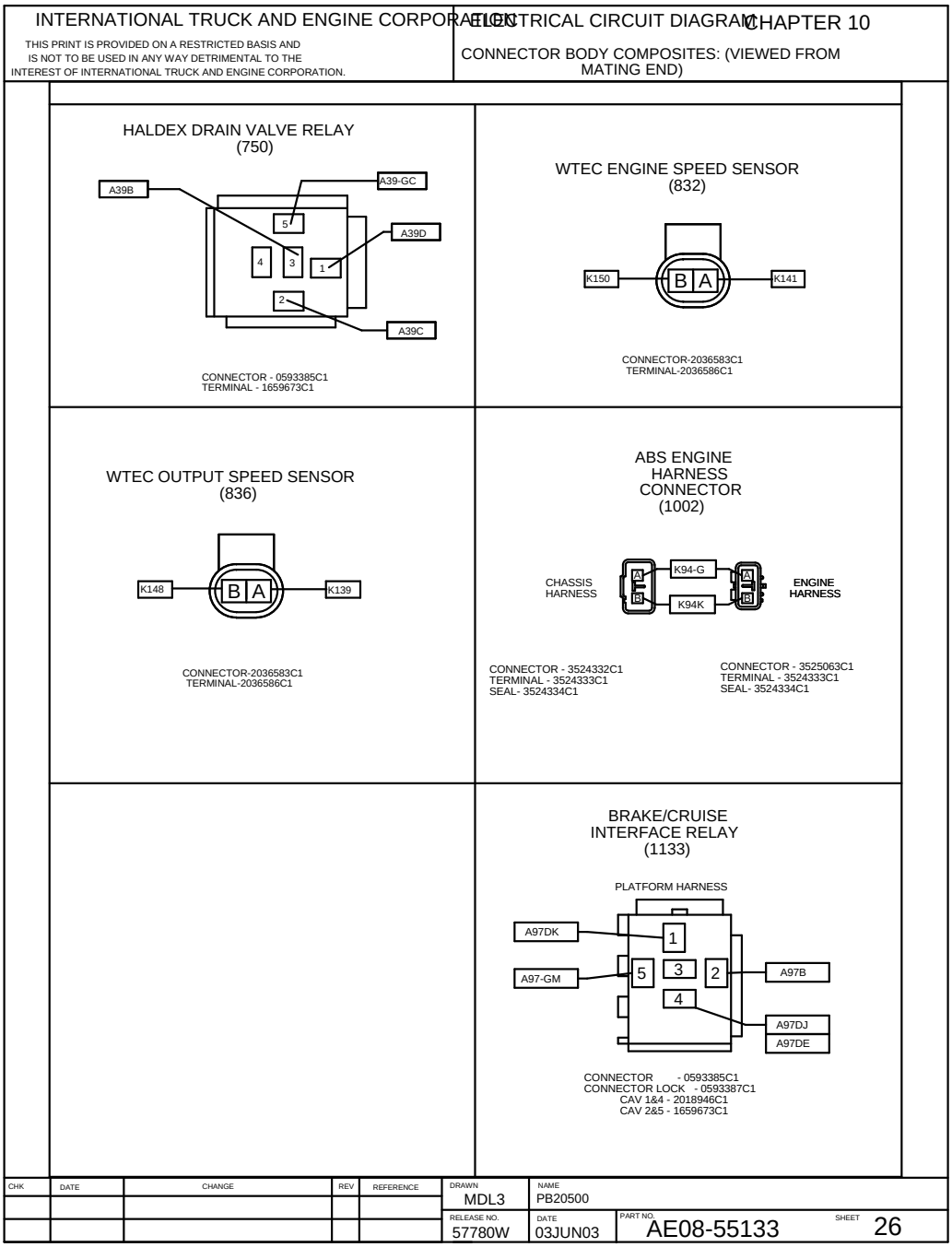

Figure 247 Connector Composites (750), (832), (836), (1002), (1133)

Connector Composites (3024), (3027), (3029), (3030), p. 27

INTERNATIONAL TRUCK AND ENGINE CORPORATION

THIS PRINT IS PROVIDED ON A RESTRICTED BASIS AND IS NOT TO BE USED IN ANY WAY DETRIMENTAL TO THE INTEREST OF INTERNATIONAL TRUCK AND ENGINE CORPORATION.

ELECTRICAL CIRCUIT DIAGRAM CHAPTER 10

CONNECTOR BODY COMPOSITE - VIEWED FROM MATING ENDS

LCT XMSN
TRANS BULKHEAD
(3024)
(LOCATED ON REAR OF XMSN)

CAVITY	CIRCUIT	CAVITY	CIRCUIT
A	K226	L	K222
B	K227	M	K223
C	K231	N	K224
D	K201	P	K225
E	K203	R	K230
F	K202	S	K232
G	K210	T	K221
H	K220A	U	PLUG
J	K229	V	PLUG
K	K204	W	K228

CONNECTOR - 3522534C1
CONNECTOR SEAL - 3522535C1
BODY LOCK - 3518287C1
TERMINAL - 3517243C1
CAVITY PLUG - 3517247C1

LCT OUTPUT SPEED
SENSOR
(3027)
(LOCATED ON XMSN)

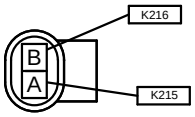

CONNECTOR - 2036583C1
TERMINALS - 2036586C1

LCT TURBINE SPEED
SENSOR
(3029)
(LOCATED ON XMSN)

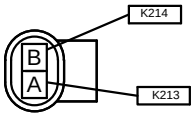

CONNECTOR - 2036583C1
TERMINALS - 2036586C1

LCT ENGINE SPEED
SENSOR
(3029)
(LOCATED ON XMSN)

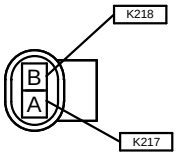

CONNECTOR - 2036583C1
TERMINALS - 2036586C1

LCT TCM RED XMSN
(3030)
(LOCATED ON RIGHT FRAME RAIL NEAR XMSN)

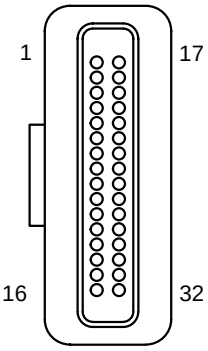

CAVITY	CIRCUIT#	CAVITY	CIRCUIT#
1	K201	17	K217
2	K202	18	K218
3	K203	19	PLUG
4	K204	20	K220
5	K205	21	K221
6	K206	22	K222
7	K207	23	K223
8	K208	24	K224
9	PLUG	25	K225
10	K210	26	K226
11	PLUG	27	K227
12	PLUG	28	K228
13	K213	29	K229
14	K214	30	K230
15	K215	31	K231
16	K216	32	K232

CONNECTOR - 3534597C1
RETAINER - 3534622C1
SEAL - 3517245C1
RED STRAIN RELIEF - 3534595C1
CPA - 3517248C1
TERMINAL - 3517243C1

CHK	DATE	CHANGE	REV	REFERENCE	DRAWN	NAME		
					MDL3	PB20500		
					RELEASE NO. 57780W	DATE 04JUN03	PART NO. AE08-55133	SHEET 27

Figure 248 Connector Composites (3024), (3027), (3029), (3030)

Connector Composites (3031), (3032), (3036), (3043), p. 28

INTERNATIONAL TRUCK AND ENGINE CORPORATION

THIS PRINT IS PROVIDED ON A RESTRICTED BASIS AND IS NOT TO BE USED IN ANY WAY DETRIMENTAL TO THE INTEREST OF INTERNATIONAL TRUCK AND ENGINE CORPORATION.

ELECTRICAL CIRCUIT DIAGRAM CHAPTER 10

CONNECTOR BODY COMPOSITE-VIEWED FROM MATING ENDS

TCM GRAY VEHICLE
(3031)
(LOCATED ON RIGHT FRAME RAIL NEAR XMSN)

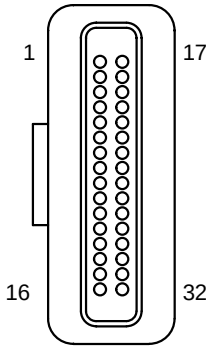

CAVITY	CIRCUIT#	CAVITY	CIRCUIT#
1	K101	17	PLUG
2	K102	18	PLUG
3	K103	19	K119
4	K104	20	PLUG
5	K105	21	PLUG
6	K106	22	PLUG
7	PLUG	23	K123
8	PLUG	24	PLUG
9	PLUG	25	K125
10	K110	26	K126
11	K111	27	PLUG
12	PLUG	28	K128
13	K113	29	K5CC+
14	PLUG	30	PLUG
15	PLUG	31	PLUG
16	PLUG	32	K5CC-

CONNECTOR - 3534597C1
RETAINER - 3534622C1
SEAL - 3517245C1
RED STRAIN RELIEF - 3534558C1
CPA - 3517248C1
TERMINAL - 3517243C1

LCT BODY BUILDER I/O (3032)
(LOCATED ON XMSN)

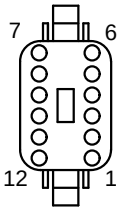

CAVITY	CIRCUIT
1	K128A
2	PLUG
3	K106
4	K119
5	K126A
6	K111
7	PLUG
8	PLUG
9	PLUG
10	PLUG
11	PLUG
12	PLUG

CONNECTOR - 1689427C1
CONNECTOR LOCK - 1689428C1
TERMINAL - 1680205C1
SEALING PLUG - 0453133C1

(TRANSMISSION HARNESS)

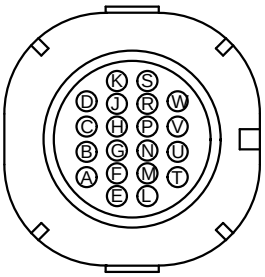

CONNECTOR - 3522537C91
CONNECTOR BODY LOCK - 3518287C1
CAVITY PLUG - 3517247C1
TERMINALS - 3517243C1
CONDUIT CLIP - 3537870C1

LCT XMSN-CAB HARNESS CONN
(3036)
(LOCATED AT DASH)

CAVITY	CIRCUIT#
A	K/A128F
B	K/A125
C	PLUG
D	PLUG
E	K/A113
F	K/A123
G	K/A110
H	K/A13J
J	PLUG
K	PLUG
L	PLUG
M	PLUG
N	PLUG
P	PLUG
R	PLUG
S	PLUG
T	PLUG
U	PLUG
V	PLUG
W	PLUG

(PLATFORM OVERLAY HARNESS)

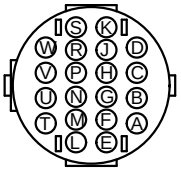

CONNECTOR - 3522538C91
CONNECTOR BODY LOCK - 3518289C1
CAVITY PLUG - 3517247C1
TERMINAL - 3518291C1
CONDUIT CLIP - 3537870C1

LCT ECONOMY MODE SWITCH (3043)
(LOCATED BEHIND SWITCH PANEL)
CAB OVERLAY

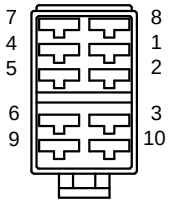

CAVITY	CIRCUIT
1	---
2	A13MG
3	---
4	---
5	A128D
6	A110
7	A94-GC
8	A92A
9	---
10	---

CONNECTOR - 3546261C1
TERMINAL - 1661224C1

CHK	DATE	CHANGE	REV	REFERENCE	DRAWN	NAME		
					MDL3	PB20500		
					RELEASE NO. 57780W	DATE 04JUN03	PART NO. AE08-55133	SHEET 28

Figure 249 Connector Composites (3031), (3032), (3036), (3043)

Connector Composites (3044), (3055/396A), p. 29

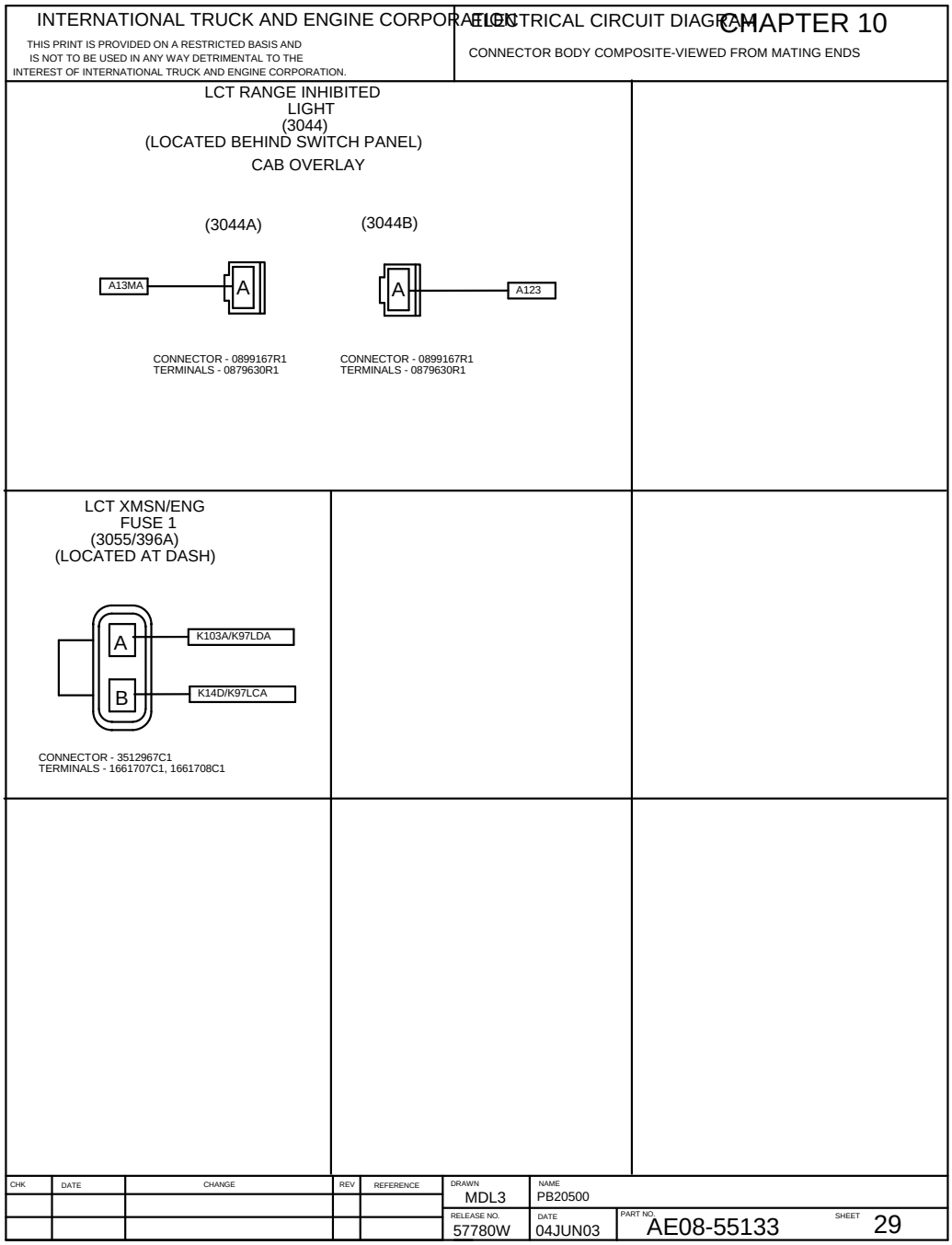

Figure 250 Connector Composites (3044), (3055/396A)

Lamp Bulb Chart, p. 30

INTERNATIONAL TRUCK AND ENGINE CORPORATION

THIS PRINT IS PROVIDED ON A RESTRICTED BASIS AND IS NOT TO BE USED IN ANY WAY DETRIMENTAL TO THE INTEREST OF INTERNATIONAL TRUCK AND ENGINE CORPORATION.

ELECTRICAL CIRCUIT DIAGRAM

CHAPTER 10

CONNECTOR BODY COMPOSITES: LAMP BULB CHART

BULB APPLICATION	WATTS OR CANDLEPOWER	TRADE NUMBER
INSTRUMENT CLUSTER		
INDICATOR.....	0.5 CANDLEPOWER.....	37
ILLUMINATION.....	0.5 CANDLEPOWER.....	37

BODY BUILDER INFORMATION

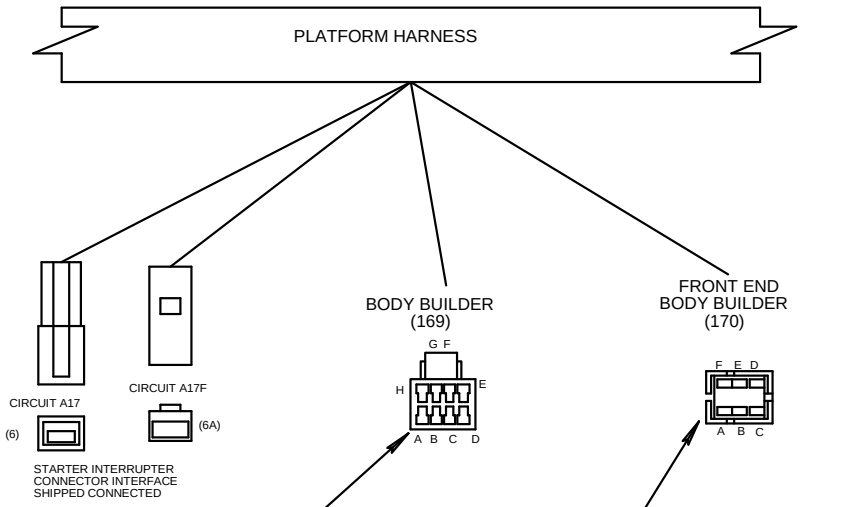

169 CONNECTOR		
CAVITY	CIRCUIT #	DESCRIPTION
A	A70A	STOP LIGHTS
B	A12D	ACC FEED
C	A62J**	PANEL LIGHTS**
D	A71A	BACK UP LIGHTS
E	A13D**	IGNITION**
F	A56C	LEFT TURN LIGHTS
G	A57C	RIGHT TURN LIGHTS
H	A58	MARKER LIGHTS

170 CONNECTOR		
CAVITY	CIRCUIT #	DESCRIPTION
A	A64A	DAYTIME RUNNING LIGHTS*
B	A57A	RIGHT TURN LIGHTS
C	A53	LO BEAM HEADLIGHTS
D	A52B	HI BEAM HEADLIGHTS
E	A56A	LEFT TURN LIGHTS
F	---	---

*W/DAYTIME RUNNING LIGHTS ONLY

** 5 AMP MAXIMUM LOAD
OVER 5 AMP - USE A RELAY.

CHK	DATE	CHANGE	REV	REFERENCE	DRAWN	NAME		
					MDL3	PB20500		
					RELEASE NO. 57780W	DATE 04JUN03	PART NO. AE08-55133	SHEET 30

Figure 251 Lamp Bulb Chart

Connector Composites (1272), (3025), (3111), p. 31

INTERNATIONAL TRUCK AND ENGINE CORPORATION

THIS PRINT IS PROVIDED ON A RESTRICTED BASIS AND IS NOT TO BE USED IN ANY WAY DETRIMENTAL TO THE INTEREST OF INTERNATIONAL TRUCK AND ENGINE CORPORATION.

ELECTRICAL CIRCUIT DIAGRAM CHAPTER 10

CONNECTOR BODY COMPOSITE - VIEWED FROM MATING ENDS

COOLANT SENSOR MODULE (1272)

(LOCATED ON ENGINE HARNESS)

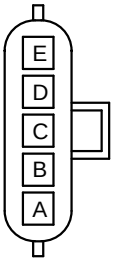

CAV	CIR	GAUGE	COLOR	TERM	SEAL
A	K34A	18	TN	2033819C1	1652325C1
C	K34-GB	16	GY	2033819C1	1652325C1
D	K34B	18	TN	2033819C1	1652325C1
E	K97SC	10	PK	1687847C1	0589390C1

CONNECTOR - 1687789C1
LOCK - 1661376C1
PLUG - 587579C1

NSBU LCT XMSN (3025)

(LOCATED ON XMSN HARNESS)

CAV	CIR	GAUGE	COLOR	TERM	SEAL
1	K97AU	18	GY	3534162C1	3535427C1
4	K206	18	YL	3535303C1	3535424C1
5	K205	18	LT BL	3535303C1	3535424C1
6	K207	18	GY	3535303C1	3535424C1
7	K220B	18	LT GN	3535303C1	3535424C1
8	K208	18	WH	3535303C1	3535424C1
10	K71A	16	OR	3535303C1	3535424C1
11	K71	16	OR	3535303C1	3535424C1
12	K97P	18	GY	3534162C1	3535427C1

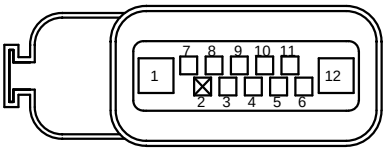

CONNECTOR - 3589739C1
LOCK - 3589823C1
PLUG - 3535425C1

J1 MSM MODULE (3111)

(LOCATED ON PLATFORM HARNESS)

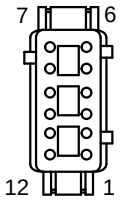

CAV	CIR	GAUGE	COLOR	TERM
1	A19K	18	GY	3518963C1
2	A97AA	18	VT	3518963C1
3	A19F	18	GY	3518963C1
8	A97CF	18	VT	3518963C1
9	A97CA	18	VT	3518963C1
10	A97RA	18	VT	3518963C1
11	A97RB	18	VT	3518963C1

CONNECTOR - 3586750C1
LOCK - 3553460C1
PLUG - 3527276C1

CHK	DATE	CHANGE	REV	REFERENCE	DRAWN	NAME		
					MDL3	PB20500		
					RELEASE NO. 57780W	DATE 04JUN03	PART NO. AE08-55133	SHEET 31

Figure 252 Connector Composites (1272), (3025), (3111)

Connector Composites (3111M), (6011), p. 32

INTERNATIONAL TRUCK AND ENGINE CORPORATION

THIS PRINT IS PROVIDED ON A RESTRICTED BASIS AND IS NOT TO BE USED IN ANY WAY DETRIMENTAL TO THE INTEREST OF INTERNATIONAL TRUCK AND ENGINE CORPORATION.

ELECTRICAL CIRCUIT DIAGRAM CHAPTER 10

CONNECTOR BODY COMPOSITE - VIEWED FROM MATING ENDS

J2 MSM MODULE (3111M)

(LOCATED ON PLATFORM HARNESS)

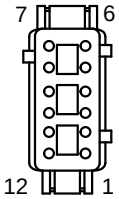

CAV	CIR	GAUGE	COLOR	TERM
1	A97AF	18	VT	3518963C1
5	A5DMS+	18	YL	3518963C1
6	A5DMS-	18	GN	3518963C1
7	A11-GM	16	WH	3518963C1
8	A13MS	18	OR	3518963C1
9	A97T	18	VT	3518963C1
10	A97AE	18	VT	3518963C1

CONNECTOR - 3586750C1
LOCK - 3553460C1
PLUG - 3527276C1

TRUCK/MELROSE CONNECTOR (6011)

(LOCATED ON ENG HARNESS)

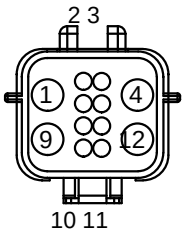

CAV	CIR	GAUGE	COLOR	TERM
1	K97-GA	12	WH	3549415C1
2	K3AB+	18	DK BL	3549418C1
3	K3AB-	18	GY	3549418C1
4	K97-GM	16	WH	3549416C1
5	K97B	16	VT	3549417C1
6	K97LC	16	VT	3549417C1
7	K97-YB	18	VT	3549418C1
8	K97LA	18	VT	3549418C1
9	K97M	18	VT	3574277C1
10	K97AZ	16	VT	3549417C1
11	K97-YC	18	VT	3549418C1
12	K97Y	12	VT	3549415C1

CONNECTOR - 3549412C1
LOCK - 3564169C1

CHK	DATE	CHANGE	REV	REFERENCE	DRAWN	NAME		
					MDL3	PB20500		
					RELEASE NO. 57780W	DATE 04JUN03	PART NO. AE08-55133	SHEET 32

Figure 253 Connector Composites (3111M), (6011)

Connector Composites (6020), (6021), p. 33

INTERNATIONAL TRUCK AND ENGINE CORPORATION

THIS PRINT IS PROVIDED ON A RESTRICTED BASIS AND IS NOT TO BE USED IN ANY WAY DETRIMENTAL TO THE INTEREST OF INTERNATIONAL TRUCK AND ENGINE CORPORATION.

ELECTRICAL CIRCUIT DIAGRAM CHAPTER 10

CONNECTOR BODY COMPOSITE
VIEWED FROM MATING ENDS

ECM1 (6020)

(LOCATED ON ENGINE HARNESS)

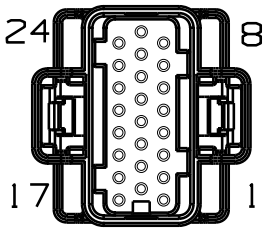

CAV	CIR	GAUGE	COLOR	TERM
3	K97C	18	VT	3562314C1
4	K34B	18	TN	3562314C1
5	K97J	18	VT	3562314C1
6	K97-GV	16	WH	3562315C1
7	K97-GW	16	WH	3562315C1
8	K#123	18	TN	3562314C1
12	K5A+	20	YL	3562314C1
13	K5A-	20	GN	3562314C1
14	K97ACH	16	VT	3562315C1
19	K97ACG	16	VT	3562315C1
23	K17L	18	PK	3562314C1
24	K97CD	18	VT	3562314C1

CONNECTOR - 3562311C1
PLUG - 3562316C1
COVER - 3562313C1

ECM2 (6021)

(LOCATED ON ENGINE HARNESS)

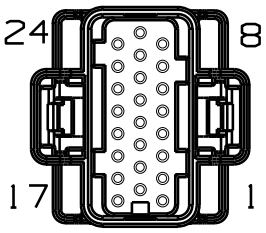

CAV	CIR	GAUGE	COLOR	TERM
1	K97F	16	VT	3562315C1
2	K97ZA	16	VT	3562315C1
4	K97	18	VT	3562314C1
10	K#157	18	GY	3562314C1
12	K99D	18	VT	3562314C1
14	K23A	18	TN	3562314C1
18	K99B	16	VT	3562315C1
20	K3AA+	18	DK BL	3562314C1
21	K3AA-	18	GY	3562314C1
24	K97D	18	VT	3562314C1

CONNECTOR - 3562311C1
PLUG - 3562316C1
COVER - 3562313C1

CHK	DATE	CHANGE	REV	REFERENCE	DRAWN	NAME
CNA	30AUG06	ADDED CIRCUITS K97ACH	A	60540L	U00MDL3	CONNECTOR COMPOSITES, PB20500
		AND K97ACG.			RELEASE NO. 57780W	DATE 04JUN03 / PART NO. AE08-55133 / SHEET 033

Figure 254 Connector Composites (6020), (6021)

Connector Composites (6200), (6201), (6202), (6203), p. 33A

INTERNATIONAL TRUCK AND ENGINE CORPORATION

THIS PRINT IS PROVIDED ON A RESTRICTED BASIS AND IS NOT TO BE USED IN ANY WAY DETRIMENTAL TO THE INTEREST OF INTERNATIONAL TRUCK AND ENGINE CORPORATION.

ELECTRICAL CIRCUIT DIAGRAM CHAPTER 10

CONNECTOR BODY COMPOSITES: CONNECTOR BODY COMPOSITES(MATING END VIEW) Continued

AC IDLE UP
PARK BRAKE SWITCH
(6200)

PLATFORM HARNESS

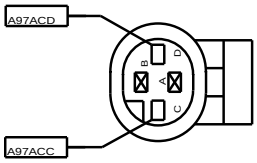

CONNECTOR - 1661777C1
TERMINAL(16AWG) - 1661875C1
MATES W/BRAKE PRESSURE SWITCH

AC IDLE UP
ISO DIODE
(6201)

PLATFORM HARNESS

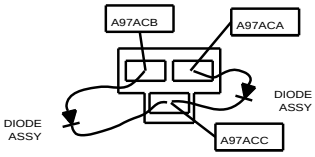

DIODE ASSY - 1659928C1
CONNECTOR - 0598839C1
TERMINAL(16AWG)- 0333733C1

DIODE ASSY IS THE MATING CONNECTOR

AC IDLE UP
BODY BUILDER
(6202)

PLATFORM HARNESS

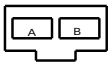

CONNECTOR - 1661196C1

CAV	CIRCUIT	GAUGE	COLOR	TERMINAL
A	A97ACA	16	VT	1661209C1
B	A97ACB	16	VT	1661209C1

AC IDLE UP RELAY
(6203)

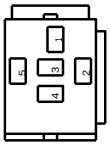

CONNECTOR - 0593385C1
CONNECTOR
BODY LOCK - 0593387C1

CAV	CIRCUIT	GAUGE	COLOR	TERMINAL
1	A97ACD	16	VT	1661709C1
2	A97ACF	16	VT	1661709C1
3	A97ACE	16	VT	1661709C1
4	-			NA
5	A97-GN	16	WH	1661709C1

CHK	DATE	CHANGE	REV	REFERENCE	DRAWN	NAME
					U00DPR3	CONNECTOR COMPOSITES, PB20500
					RELEASE NO. 60540L	DATE 28AUG06
					PART NO. AE08-55133	SHEET 33A

Figure 255 Connector Composites (6200), (6201), (6202), (6203)

Connector Composites (6323F), (6400), (6406), p. 34

INTERNATIONAL TRUCK AND ENGINE CORPORATION

THIS PRINT IS PROVIDED ON A RESTRICTED BASIS AND IS NOT TO BE USED IN ANY WAY DETRIMENTAL TO THE INTEREST OF INTERNATIONAL TRUCK AND ENGINE CORPORATION.

ELECTRICAL CIRCUIT DIAGRAM CHAPTER 10

CONNECTOR BODY COMPOSITE - VIEWED FROM MATING ENDS

ECM CLEAN POWER & GROUND (6323F)

(LOCATED ON ENGINE HARNESS BY STARTER)

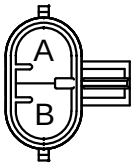

CAV	CIR	GAUGE	COLOR	TERM	SEAL
A	K97X	10	VT	2025423C1	2025426C1
B	K97-G	10	WH	2025423C1	2025426C1

CONNECTOR - 2031520C1

LOW COOLANT SENDER (6400)

(LOCATED ON ENGINE HARNESS AT SURGE TANK)

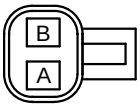

CAV	CIR	GAUGE	COLOR	TERM	SEAL
A	K34A	18	TN	2033819C1	1652325C1
B	K34-G	16	WH	2033819C1	1652325C1

CONNECTOR - 1671610C1

FAN SOLENOID (6406)

(LOCATED ON ENGINE HARNESS BY CMPRSR)

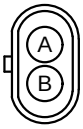

CAV	CIR	GAUGE	COLOR	TERM	SEAL
A	K23	18	TN	0587578C1	1652325C1
B	K23-G	16	WH	0587577C1	1652325C1

CONNECTOR - 0587567C91

CHK	DATE	CHANGE	REV	REFERENCE	DRAWN	NAME		
					MDL3	PB20500		
					RELEASE NO. 57780W	DATE 04JUN03	PART NO. AE08-55133	SHEET 34

Figure 256 Connector Composites (6323F), (6400), (6406)

Connector Composites (6703), (6706), p. 35

INTERNATIONAL TRUCK AND ENGINE CORPORATION

THIS PRINT IS PROVIDED ON A RESTRICTED BASIS AND IS NOT TO BE USED IN ANY WAY DETRIMENTAL TO THE INTEREST OF INTERNATIONAL TRUCK AND ENGINE CORPORATION.

ELECTRICAL CIRCUIT DIAGRAM

CHAPTER 10

CONNECTOR BODY COMPOSITE - VIEWED FROM MATING ENDS

AMBIENT AIR TEMP (6703)

(LOCATED ON ENGINE HARNESS AT AIR PIPE)

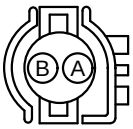

CAV	CIR	GAUGE	COLOR	TERM
A	K97B	16	VT	1689464C1
B	K97S	16	VT	1689464C1

CONNECTOR - 1689462C1
LOCK - 1689463C1

FUEL FILTER PREHEATER (6706)

(LOCATED ON ENGINE HARNESS AT FUEL FILTER)

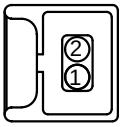

CAV	CIR	GAUGE	COLOR	TERM	SEAL
1	K19A	14	GY	3559035C1	3575783C1
2	K19-GZ	14	WH	3559035C1	3575783C1

CONNECTOR - 1689462C1

CHK	DATE	CHANGE	REV	REFERENCE	DRAWN	NAME		
					MDL3	PB20500		
					RELEASE NO. 57780W	DATE 04JUN03	PART NO. AE08-55133	SHEET 35

Figure 257 Connector Composites (6703), (6706)

Connector Composites (7202), (7203), (7204), p. 36

INTERNATIONAL TRUCK AND ENGINE CORPORATION

THIS PRINT IS PROVIDED ON A RESTRICTED BASIS AND IS NOT TO BE USED IN ANY WAY DETRIMENTAL TO THE INTEREST OF INTERNATIONAL TRUCK AND ENGINE CORPORATION.

ELECTRICAL CIRCUIT DIAGRAM CHAPTER 10

CONNECTOR BODY COMPOSITE: (VIEWED FROM MATING ENDS)

WTEC TRANSMISSION ECU "V"
(7202)

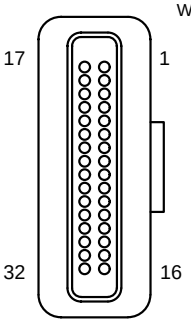

CONNECTOR ASSY (GRAY)-3517239C1*
RETAINER(CLR)-3517240C1
CONNECTOR-3517244C1
SEAL-3517245C1
CONN(POSITION) LOCK-3517246C1
PLUG-3517247C1

GRAY STRAIN RELIEF-*

CAVITY	CIRCUIT	CAVITY	CIRCUIT
1	K136	17	K143
2	K114	18	K125
3	PLUG	19	K105
4	K113	20	PLUG
5	K167	21	PLUG
6	K123	22	K112
7	PLUG	23	PLUG
8	PLUG	24	PLUG
9	PLUG	25	PLUG
10	PLUG	26	PLUG
11	K155	27	K154
12	K153	28	PLUG
13	K118	29	K137
14	PLUG	30	K117
15	PLUG	31	K161
16	K136B	31	K143B

WTEC TRANSMISSION ECU "T"
(7203)

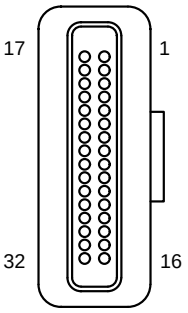

CONNECTOR ASSY (BLUE)-3517241C1*
RETAINER(BLUE)-3517242C1
CONNECTOR-3517244C1
SEAL-3517245C1
CONN(POSITION) LOCK-3517246C1
PLUG-3517247C1

BLUE STRAIN RELIEF-*

CAVITY	CIRCUIT	CAVITY	CIRCUIT
1	K102	17	K130
2	K121	18	PLUG
3	K107	19	PLUG
4	K120	20	K128
5	K103	21	K131
6	K129	22	K110
7	K104	23	PLUG
8	PLUG	24	PLUG
9	K124A	25	K135A
10	PLUG	26	K165
11	PLUG	27	K147
12	K162	28	PLUG
13	K195	29	PLUG
14	K141	30	K150
15	K149A	31	K140A
16	K139	31	K148

WTEC TRANSMISSION ECU "S"
(7204)

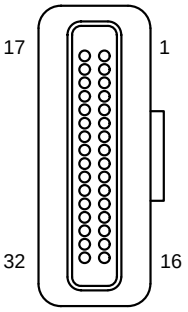

CONNECTOR ASSY (BLACK)-3517237C1*
RETAINER(BLACK)-3517238C1
CONNECTOR-3517244C1
SEAL-3517245C1
CONN(POSITION) LOCK-3517246C1
PLUG-3517247C1

BLACK STRAIN RELIEF-*

CAVITY	CIRCUIT	CAVITY	CIRCUIT
1	K142(+)	17	K151(-)
2	PLUG	18	PLUG
3	K124	19	PLUG
4	K146A	20	PLUG
5	K170	21	PLUG
6	K171	22	PLUG
7	K172	23	PLUG
8	K173	24	PLUG
9	K174	25	PLUG
10	K175	26	K169
11	K119	27	K163
12	PLUG	28	PLUG
13	K5CC+	29	K5CC-
14	K180	30	K157
15	PLUG	31	K115
16	PLUG	31	K143A

CHK	DATE	CHANGE	REV	REFERENCE	DRAWN	NAME		
					MDL3	PB20500		
					RELEASE NO. 57780W	DATE 03JUN03	PART NO. AE08-55133	SHEET 36

Figure 258 Connector Composites (7202), (7203), (7204)

Fuse/Circuit Breaker Chart, p. 37

INTERNATIONAL TRUCK AND ENGINE CORPORATION

THIS PRINT IS PROVIDED ON A RESTRICTED BASIS AND IS NOT TO BE USED IN ANY WAY DETRIMENTAL TO THE INTEREST OF INTERNATIONAL TRUCK AND ENGINE CORPORATION.

ELECTRICAL CIRCUIT DIAGRAM CHAPTER 10

CONNECTOR BODY COMPOSITES: FUSE/CIRCUIT BREAKER CHART

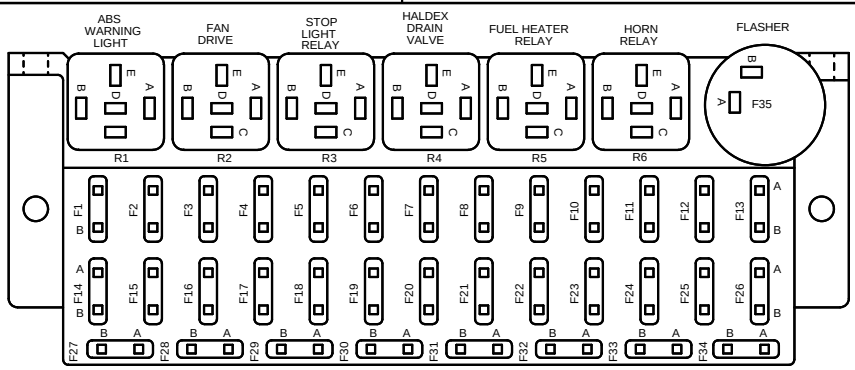

FUSEBLOCK (PART NUMBER 1659650C1)

LOCATION	SIZE	DESCRIPTION
F1	10 AMP	HYDRAULIC BRAKE PUMP SWITCH
F2	10 AMP	HYDRAULIC BRAKE MONITOR MODULE
F3	20 AMP	BATT DIAG CONN/ELECT ENG POWER RELAY
F4	.....	NOT USED
F5	10 AMP	IGN DAYTIME RUNNING LIGHTS
F6	10 AMP	ACC DAYTIME RUNNING LIGHTS
F7	10 AMP	AIR DRYER
F8	1O AMP	ABS POWER RELAY
F9	10 AMP	BODY CONNECTIONS
F10	10 AMP	NEUTRAL POSITION/IVS
F11	20 AMP	HORN
F12	10 AMP	STOP LIGHTS
F13	20 AMP	TURN/HAZARD SIGNAL
F14	10 AMP	MKR FEED
F15	20 AMP	HEADLIGHTS
F16	30 AMP	KEY SWITCH
F17	20 AMP	BAT FUEL HEATER
F18	.....	NOT USED
F19	5 AMP	ENGINE ELECTRONICS
F20	10 AMP	IGN FUEL HEATER
F21	5 AMP	PANEL LIGHTS
F22	5 AMP	INSTRUMENT CLUSTER & CRUISE CONTROL
F23	10 AMP	DRAIN VALVE
F24	10 AMP	BACKUP LIGHT SWITCH, WARNING ALARM
F25	.....	NOT USED
F26	10 AMP	IGN FEED
F27	10 AMP	IGN FEED ABS
F28	.....	NOT USED
F29	5 AMP	FAN DRIVE SOLENOID
F30	10 AMP	ENGINE ELECTRONICS
F31	10 AMP	MSM MODULE
F32-F33	.....	NOT USED
F34	30 AMP	BAT FEED ABS

CHK	DATE	CHANGE	REV	REFERENCE	DRAWN MDL3	NAME PB20500		
					RELEASE NO. 57780W	DATE 04JUN03	PART NO. AE08-55133	SHEET 37

Figure 259 Fuse/Circuit Breaker Chart