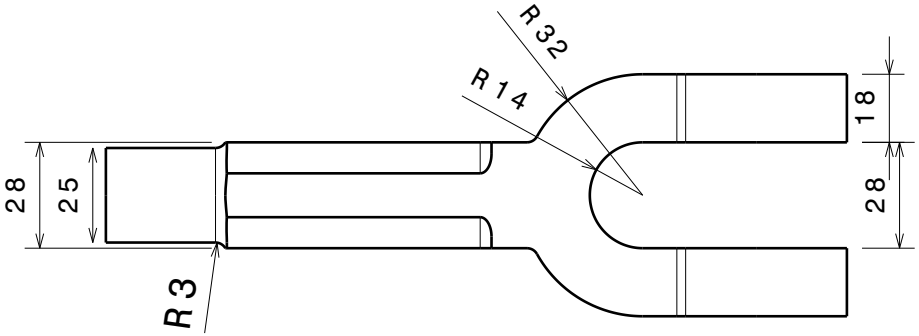

Front view
Scale: 1:2

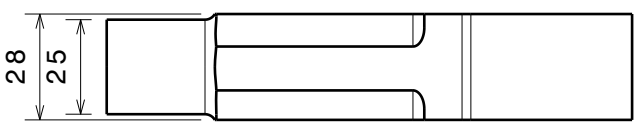

Front view
Scale: 1:2

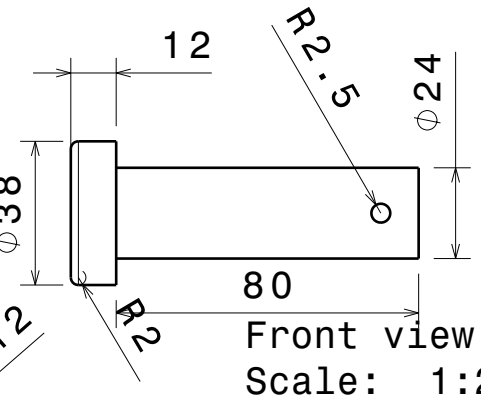

Front view
Scale: 1:2

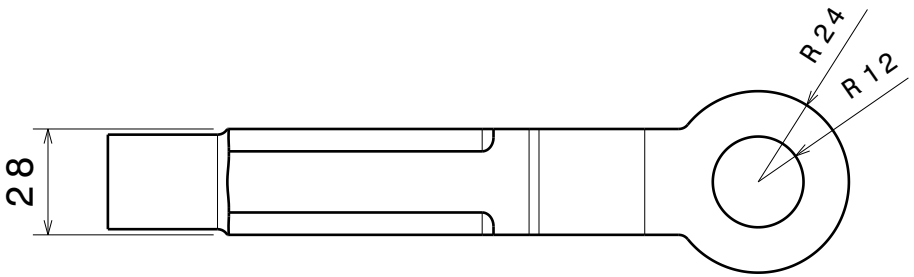

Top view
Scale: 1:2

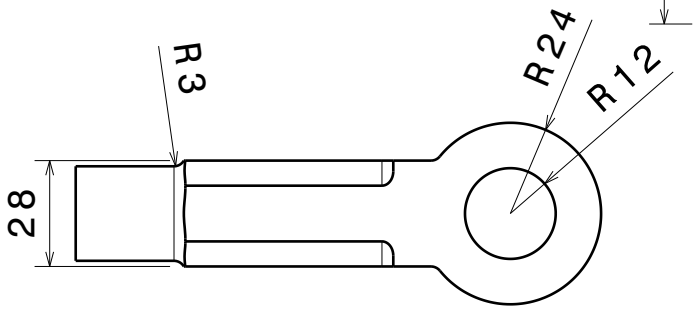

Top view
Scale: 1:2

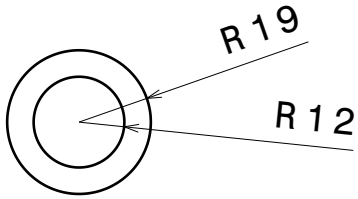

Top view
Scale: 1:2

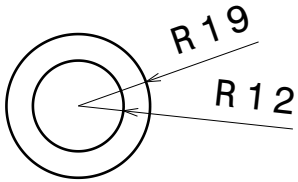

Front view
Scale: 1:2

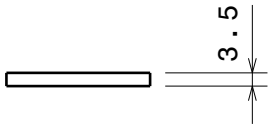

Top view
Scale: 1:2

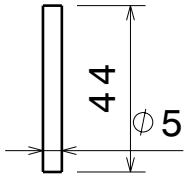

Front view
Scale: 1:2

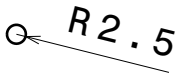

Top view
Scale: 1:2

ROLL NO: 2023502017	MIT, ANNA UNIVERSITY
B.E. AUTOMOBILE	
SHEET NO: 01	FORK END, EYE END, PIN, COLLAR, TAPER PIN
DATE: 29/09/2025	