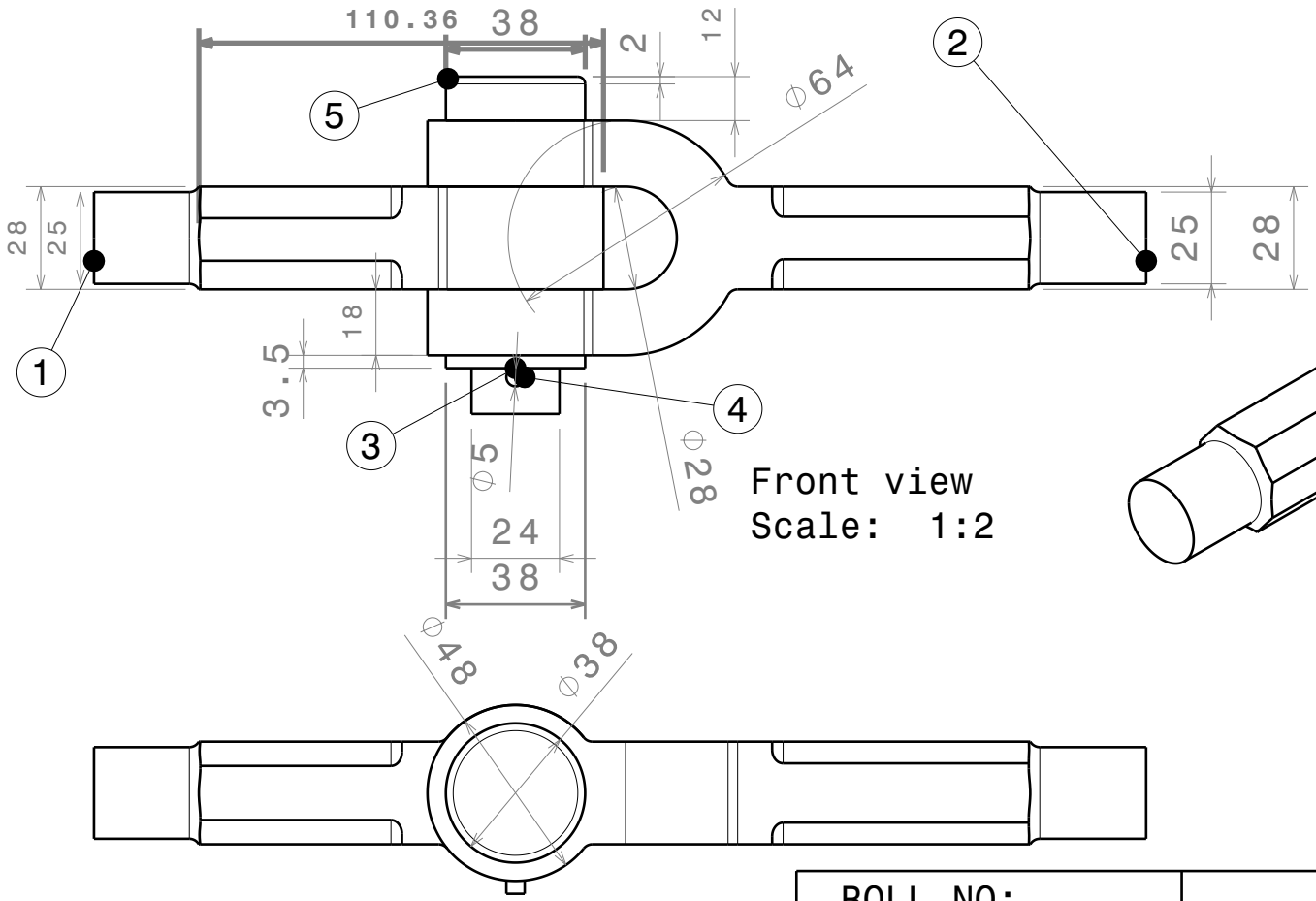

Front view
Scale: 1:2

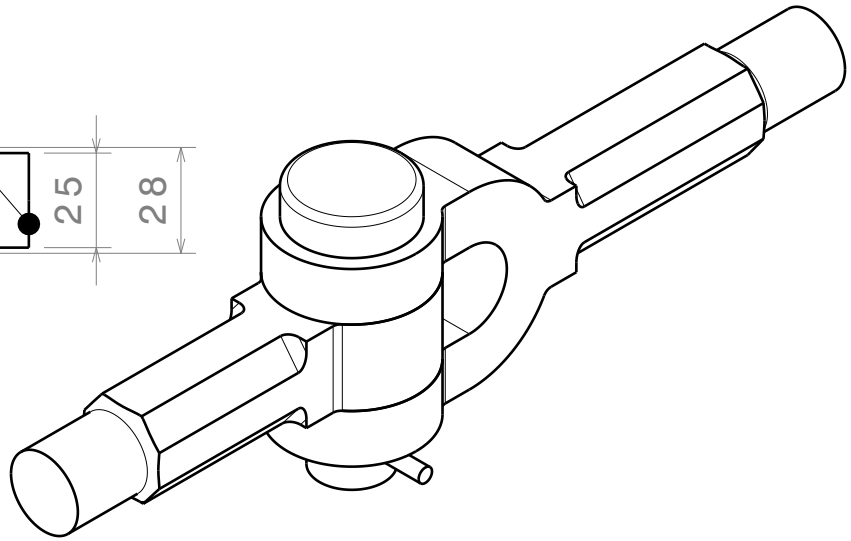

Isometric view
Scale: 1:2

Bill of Material: Knuckle joint

Number	Part Number	Quantity
1	EYE END	1
2	FORK END	1
3	COLLLAR	1
4	taper pin	1
5	PIN	1

ROLL NO: 2023502017	MIT, ANNA UNIVERSITY
B.E. AUTOMOBILE	
SHEET NO: 01	KNUCLKE JOINT
DATE: 29/09/2025	