RECEIVER

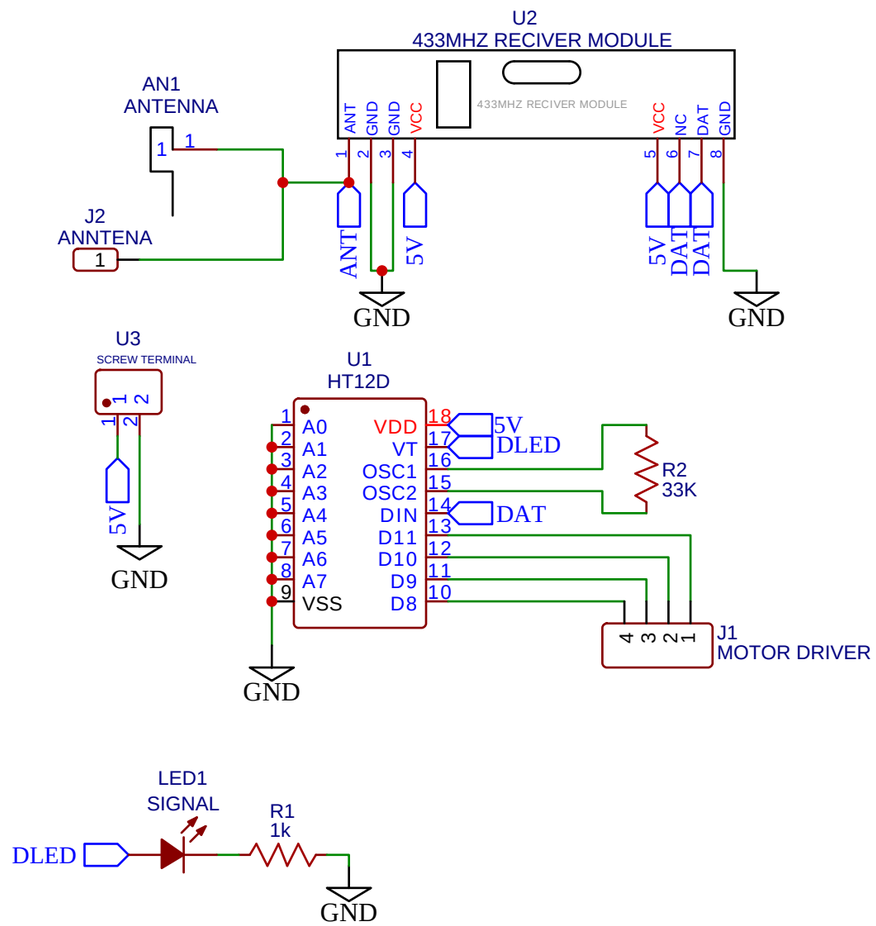

TITLE: RECIVER		REV: 1.0
SPARK TECH	Company: SPARK-TECH INDUS.	Sheet: 1/1
	Date: 2022-10-17 Drawn By: DHANUSH SCIENCE	