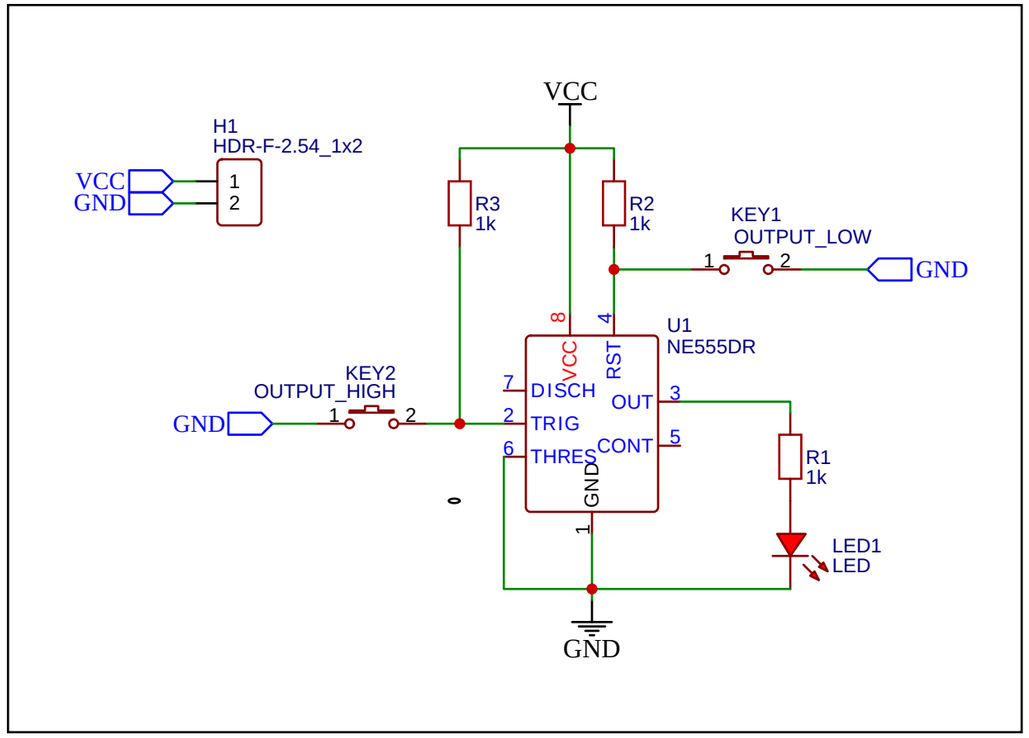

TITLE: 555 Timer Bistable Multivibrator		REV: 1.0
嘉立创EDA	Company: Your Company	Sheet: 1/1
	Date: 2023-07-01 Drawn By: dhirajzen	