Printed Pages – 8 Roll No. : .....

A000215(020)

B. Tech. PQ. (First Semester) Examination, 2020

(AIC Scheme)

(AEI, Bio-Tech, Chem., Civil, CSE, Elect., EEE, EI, ET & T, IT, Mech., Mining, Metallurgy, Mechatronics, Production, Automobile, Agriculture, Plastic Branch)

BASIC CIVIL ENGINEERING & MECHANICS

Time Allowed : Three hours

Maximum Marks : 100

Minimum Pass Marks : 35

Note : *Answer all **five** questions. Part (a) of each question is compulsory carries 4 marks. Attempt any **two** parts from (b), (c) and (d) carries 8 marks.*

Unit-I

1. (a) Write short notes on : 4

   (i) Frog

   (ii) Bouge compounds

   (iii) Initial setting time

(iv) Mortar

(b) What are the characteristics of first class bricks? Explain in detail compressive strength test for bricks. 8

(c) Write short notes on : 8

(i) Fineness of cement

(ii) Ingredients of cement

(iii) Compressive strength of cement

(iv) Mortar mix proportions

(d) What are different types of cements? Distinguish between ordinary portland cement and Pozzolana portland cement. 8

Unit-II

2. (a) (i) What is the most dominant constituent of cement? 2

(1) Silica

(2) Lime

(3) Magnesia

(4) Alumina

(ii) Foundations can be broadly classified under .....

(1) Shallow foundation and deep foundation

(2) Pile foundation

(3) None of the mentioned

(4) All of the mentioned

(b) What are the ingredients and grades of concrete? Explain proportions for nominal mix concrete. 8

(c) What is workability of concrete? What are the tests for finding out workability? Explain any one of it in brief. 8

(d) What is purpose of providing foundations in a building? What are the functions of foundations? 8

Unit-III

3. (a) (i) For a well conditioned triangle, no angle should be less than 2

(ii) What are principles of chain surveying? 2

(b) Define : 1×8=8

(i) Base line

(ii) Check line

(iii) Tie line

(iv) Survey stations

(v) Offset

(vi) Ranging

(vii) Well conditioned triangle

(viii) Offset

(c) Write short notes on : 8

(i) Bench mark

(ii) Back sight

(iii) Fore sight

(iv) Arithmetic checks applied in rise and fall

(d) The following staff readings were observed successively with level, the instrument have been moved forward after the second, fourth, and eight reading :

0·875, 1·235, 2·310, 1·385, 2·930, 3·125, 4·125, 0·120, 1·875, 2·030 and 3·765.

The first reading was taken with the staff held upon a bench mark of elevation 132·135 m. Enter the readings in the level book form and reduce the levels. Apply the usual checks. Find also the differene in level between the first and the last points. 8

Unit-IV

4. (a) (i) What are the various characteristics of forces? 4

(ii) Write down the equations of equilibrium.

(b) An electric light bulb weighting 15 N hangs from a point C, two strings AC and BC. The string AC is inclined at 60° to the horizontal and BC at 45° to the vertical as shown in figure. Determine the forces in strings AC and BC. 8

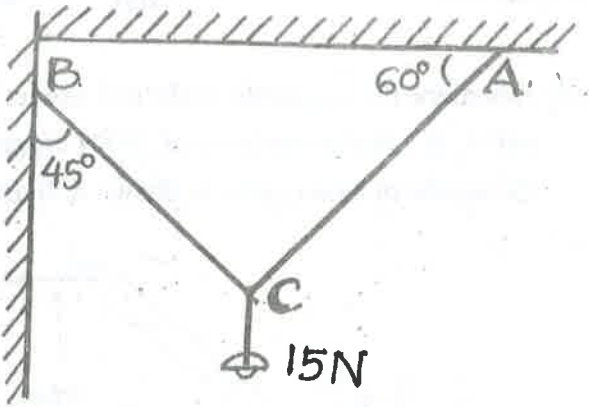

(c) Determine the force exerted on the cylinder at A&B by spanner wrench due to a vertical force of 200 N to the handle. Neglect friction at B. Draw the free body diagram for cylinder and wrench separetely. 8

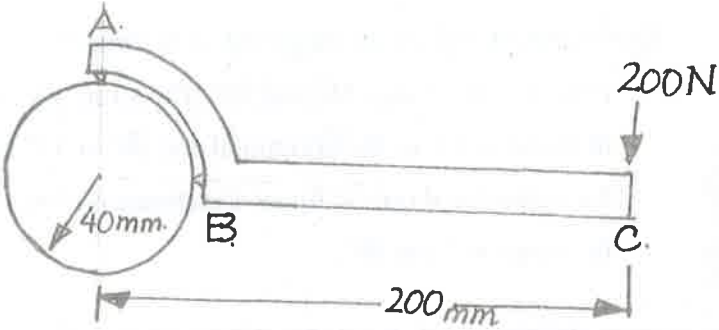

(d) Determine the magnitude of the pull exerted on the nail A, if a horizontal force of 200 N is applied to the handle of a nail puller as shown in figure. 8

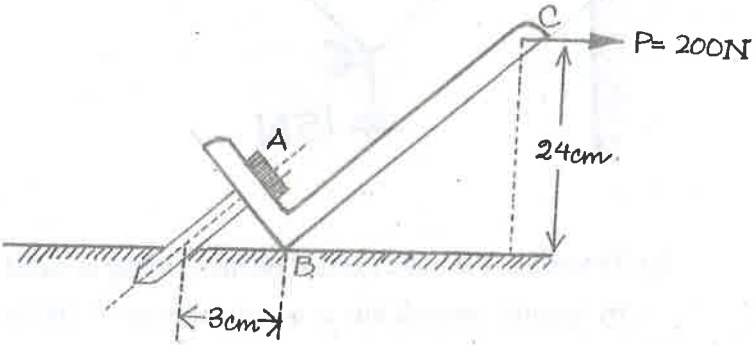

Unit-V

5. (a) (i) What are the assumptions used in analysis of truss? 4

(ii) Write down the conditions of perfect truss.

(b) Find the forces in all the members of the truss as shown in the figure, indicating whether the force is compressive or tensile. Use the method of joints. 8

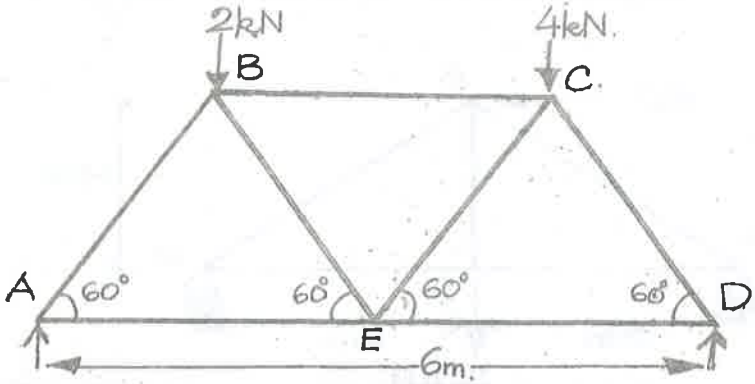

(c) Find out the value of W which would produce the force of magnitude 15 kN in the member AB : 8

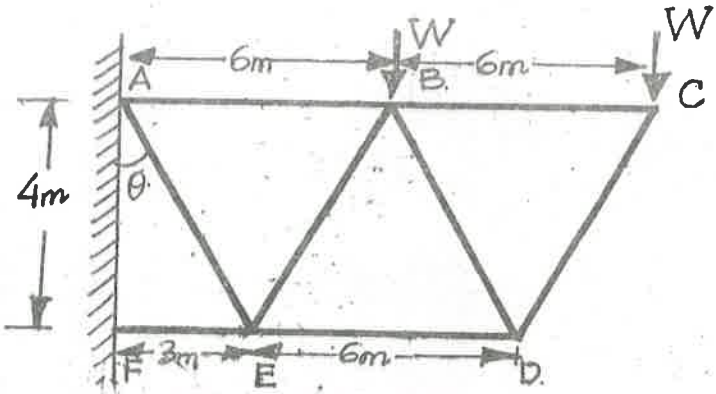
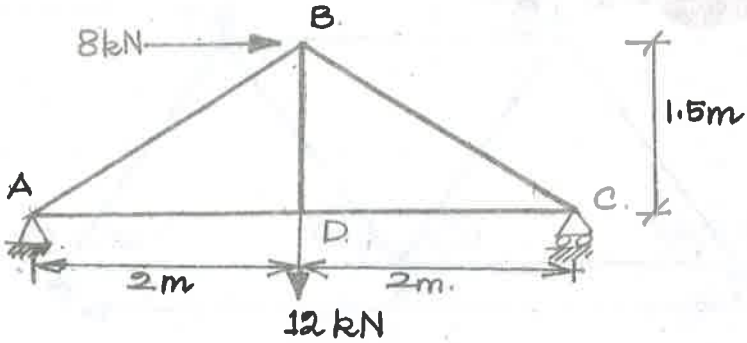
(d) Find the forces in all the members of the truss as shown in the figure, indicating whether the force is compressive or tensile. Use the method of sections. 8