http://www.csvtuonline.com

(*c*) Draw the isometric view of the casting shown below (All dimensions are in mm)

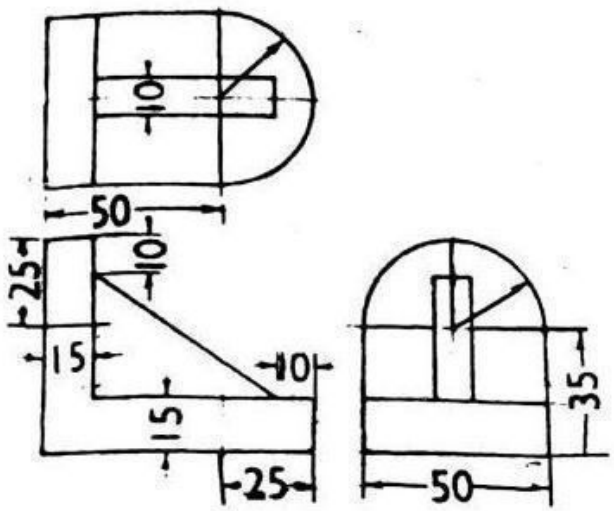

[14]

(Third angle projection)

http://www.csvtuonline.com

5. (*a*) Name two CAD softwares. [2]

(*b*) What are the benefits and limitations of Computer Aided Drawing? [7]

(*c*) Explain any seven commands in Computer Aided Drawing. [7]

(*d*) What is the use of layers in making drawing in Auto CAD? [7]

.....

http://www.csvtuonline.com

http://www.csvtuonline.com

http://www.csvtuonline.com

http://www.csvtuonline.com

http://www.csvtuonline.com

Printed Pages : 4

Roll No

300211(37)

BE (1st & 2nd Semester)
Examination, Nov.–Dec., 2016

Engineering Graphics

Time Allowed : 4 hours *Maximum Marks* : 80
Minimum Pass Marks : 28

Note : (*i*) Attempt all Questions. Part (*a*) of each question is compulsory.
(*ii*) Attempt any **two** parts from (*b*), (*c*) and (*d*).
(*iii*) The figures in the right-hand margin indicate marks.

1. (*a*) What are the applications of scale? [2]

(*b*) On a map, the distance between two points is 14 cm. The real distance between them is 20 km. Draw a diagonal scale of this map to read kilometres and hectametres and to measure up to 25 km. Show a distance of 17.6 km on this scale. [7]

http://www.csvtuonline.com

http://www.csvtuonline.com

(*c*) The foci of an ellipse are 90 mm apart and the minor axis is 65 mm long. Determine the length of the major axis and draw half the ellipse by concentric circles method and the other half by oblong method. [7]

(*d*) A circle 50 mm diameter rolls along a straight line without slipping. Draw the curve traced out by a point P on the circumference, for one complete revolution of the circle. Name the curve. [7]

2. (*a*) Define 'Trace' of line. [2]

(*b*) The top view of a 75 mm long line AB measures 65 mm, while the length of its front view is 50 mm. Its one end A is in the H.P. and 12 mm in front of the V.P. Draw the projection of AB and determine its inclinations with the H.P. and the V.P. [7]

(*c*) A line AB, 65 mm long has its end A 20 mm above the H.P. and 25 mm in front of the V.P. The end B is 40 mm above the H.P. and 65 mm in front of the V.P. Draw the projections of AB and show its inclinations with the H.P. and the V.P. [7]

(*d*) A line AB, 90 mm long, is inclined at 45° to the H.P. and its top view makes an angle of 60° with the V.P. Draw its front view and find its true inclination with the V.P. [7]

http://www.csvtuonline.com

http://www.csvtuonline.com

http://www.csvtuonline.com

3. (*a*) What is section of solids? [2]

(*b*) A thin rectangular plate of sides 60 mm ×30 mm has its shorter side in the V.P. and inclined at 30° to the H.P. Project its top view if its front view is a square of 30 mm long sides. [7]

(*c*) A square pyramid of 50 mm side of base and 50 mm length of axis is resting on one of its triangular faces on the H.P. having a slant edge containing that face parallel to the V.P. Draw the projections of the pyramid. [7]

(*d*) A square pyramid, base 40 mm side and axis 65 mm long has its base on the H.P. and all the edges of the base are equally inclined to the V.P. It is cut by a section plane, perpendicular to the V.P., inclined at 45° to the H.P. and bisecting the axis. Draw its sectional top view, sectional side view and the true shape of the section. [7]

4. (*a*) What is the difference between isometric view and isometric projection? [2]

(*b*) Draw the projections of a cone resting on the ground on its base and show on them the shortest path by which a point P, starting from a point on the circumference of the base and moving around the cone will return to the same point. Base of cone 65 mm diameter, axis 75 mm long. [14]

OR

http://www.csvtuonline.com

http://www.csvtuonline.com