Printed Pages – 9 Roll No. : .....

300219(37)

B. E. (First & Second Semester) Examination, April-May 2020

(New Scheme)

(AEI, Bio-Tech, Chem., Civil, CSE, Elect., EEE, EI, ET&T, IT, Mech., Mining, Metallurgy, Mechatronics, Production, Automobile Branch)

FUNDAMENTAL of MECHANICAL ENGINEERING

Time Allowed : Three hours

Maximum Marks : 80

Minimum Pass Marks : 28

Note : *Attempt all questions. Part (a) of each question is compulsory. Attempt any* ***two*** *parts from (b), (c) and (d) of each question.*

1. (a) Explain Law of Transmissibility of forces. 2

(b) For the equilibrium of given force system, find the value of F and θ. 7

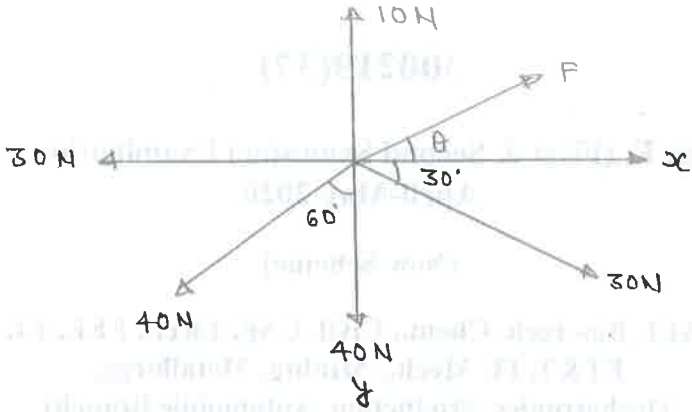

Fig. (1)

(c) A bar 2 m long and of negligible weight rests in horizontal position on two smooth inclined planes. Determine the distance x at which the load should be placed from point 13 to keep the bar horizontal. 7

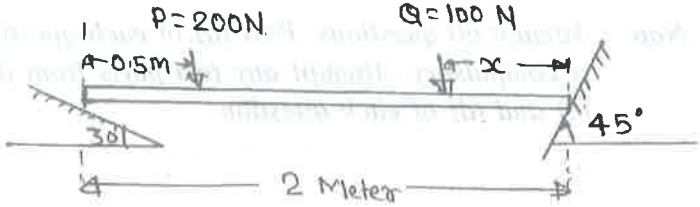

Fig. (2)

(d) A bar of weight $w = 100$ N is hinged at A and is pulled by a cable attached at B by a force F. Find the force F and magnitude and direction of reaction

at A if the bar is in equilibrium. Condition as shown in figure. 7

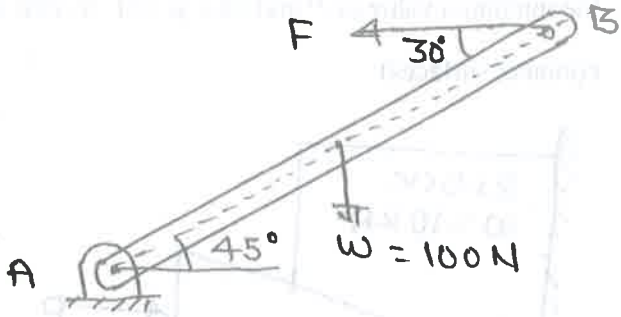

Fig. (3)

2. (a) Define Angle of friction. 2

(b) A cantilever truss is loaded as shown in figure. Find the axial force in all the members. 7

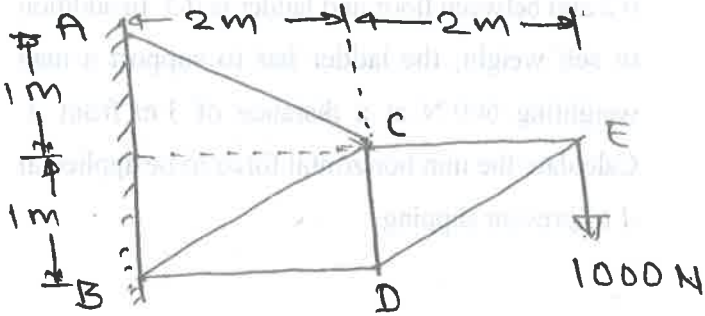

Fig. 4

(c) A block of weight 10 kN is to be raised by a wedge as shown by a horizontal force P in figure. Determine the minimum value of P and take $\mu = 0 \cdot 36$ (for all contacet surfaces). 7

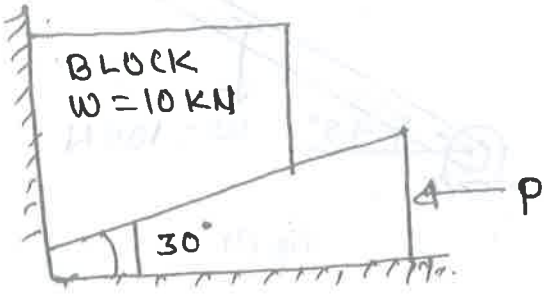

Fig. 5

(d) A ladder of length 4 m weighing 200 N is placed against a vertical wall μ between wall and ladder is 0·2 and between floor and ladder is 0·3. In addition to self weight, the ladder has to support a man weighting 600 N at a distance of 3 m from A. Calculate the min horizontal force to be applied at A to prevent slipping. 7

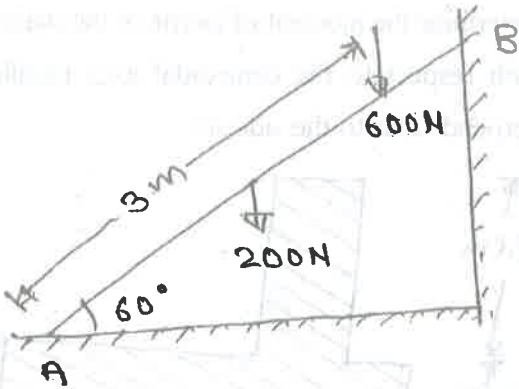

Fig. (6)

3. (a) Define the term Radius of Gyration. 2

(b) Determine the centroid of the Parabolic spandrels as shown in the figure. The equation of the parabola is given by $y = kx^2$. 7

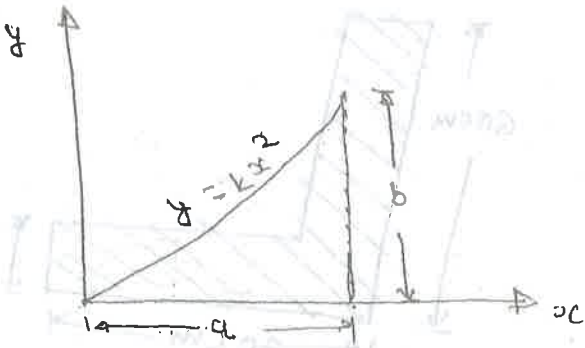

Fig. (7)

(c) Determine the moment of inertia of the shaded area with respect to the centroidal axes parallel and perpendicular to the side *AB*. 7

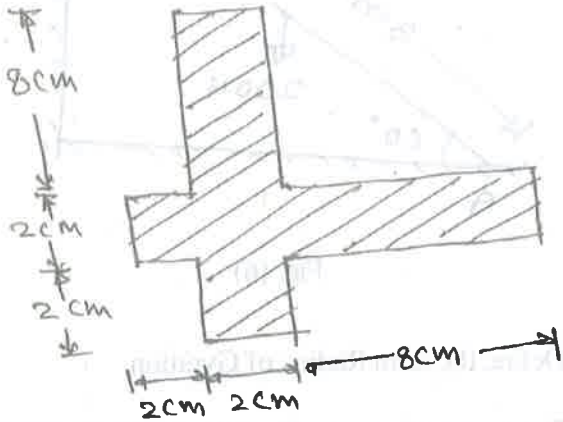

Fig. (8)

(d) Determine the product of inertia of an unequal angle section in figure about its centroidal axes. 7

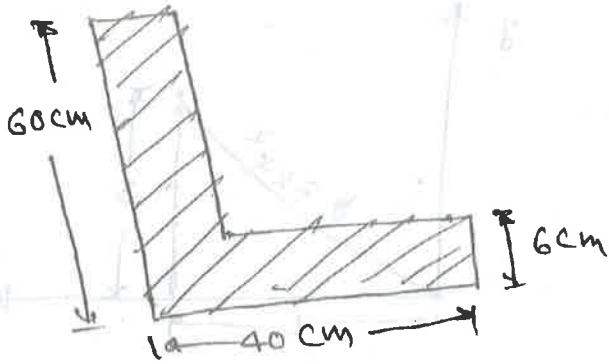

Fig. (9)

4. (a) State the principal of work-energy. 2

(b) In the given figure find the acceleration of the block. If block in moving towards downside and N between block and surface is 0·3 by using D-alembert's principle. 7

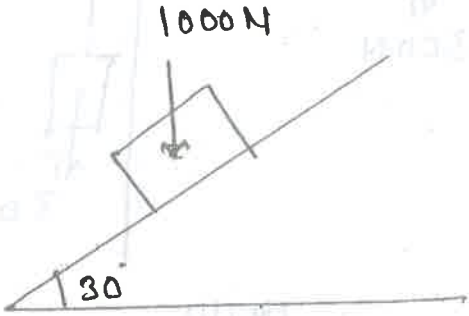

Fig. (10)

(c) A blocks of 300 N is placed on a smooth table at 2 m from its edge where the string connecting the block passes over a smooth pulley and carries a weight of 30 N at the other end.

Determine :

(i) Acceleration of the system

(ii) the tenson in the string

(iii) the time elapsed for the block to reach the edge of the table 7

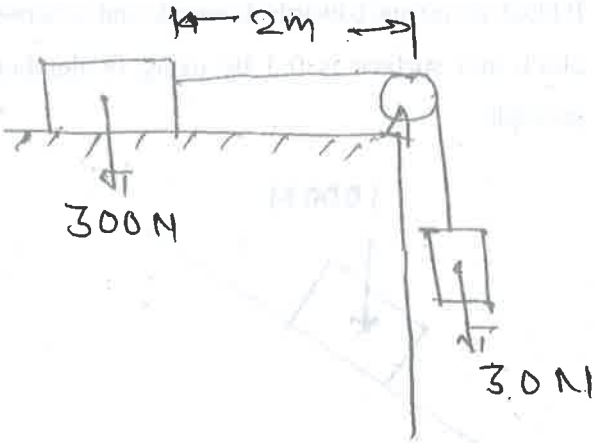

Fig. (11)

(d) A machine gun bullet of mass 100 gm is fired with a velocity of 400 m/s. What is the kinetic energy of the bullet? If the bullet can penetrate 20 cm in a block of wood. What is the average resitance of the wood? What will be the exit velocity of the bullet if fired into similar block of wood 10 cm thick? 7

5. (a) Define thermodynamic Equilibrium. 2

(b) A mass of 1·5 kg of air is compressed in a quasistatic process from 0.1 MPa to 0·7 MPa for which

PV = const. The initial density of air is $1 \cdot 16$ kgm^{-3}. Find the work done by piston to compress the air. 7

(c) Prove that energy is A property of the system. 7

(d) A blower handles 1 kg/s of air at 20° C and consumes a power of 15 kW. The inlet and outlet velocity of air are 100 m/s and 150 m/s. Find the exit air temperature assumign a diabiatic conditions. 7